# Compal Confidential

## ZPT10 UMA M/B LA-B151P Schematics Document

### Intel Bay Trail M

2014-01-14

Rev:1.0

| | | | |
|---|---|---|---|
| Security Classification | Compal Secret Data | | |
| Issued Date | 2014/01/14 | Deciphered Date | 2015/01/14 |

THIS SHEET OF ENGINEERING DRAWING IS THE PROPRIETARY PROPERTY OF COMPAL ELECTRONICS, INC. AND CONTAINS CONFIDENTIAL AND TRADE SECRET INFORMATION. THIS SHEET MAY NOT BE TRANSFERED FROM THE CUSTODY OF THE COMPETENT DIVISION OF R&D DEPARTMENT EXCEPT AS AUTHORIZED BY COMPAL ELECTRONICS, INC. NEITHER THIS SHEET NOR THE INFORMATION IT CONTAINS MAY BE USED BY OR DISCLOSED TO ANY THIRD PARTY WITHOUT PRIOR WRITTEN CONSENT OF COMPAL ELECTRONICS, INC.

*Compal Electronics, Inc.*

Title: *Cover Page*

Size: Custom | Document Number: *LA-B151P* | Rev: 1.0

Date: Tuesday, January 21, 2014 | Sheet 1 of 48

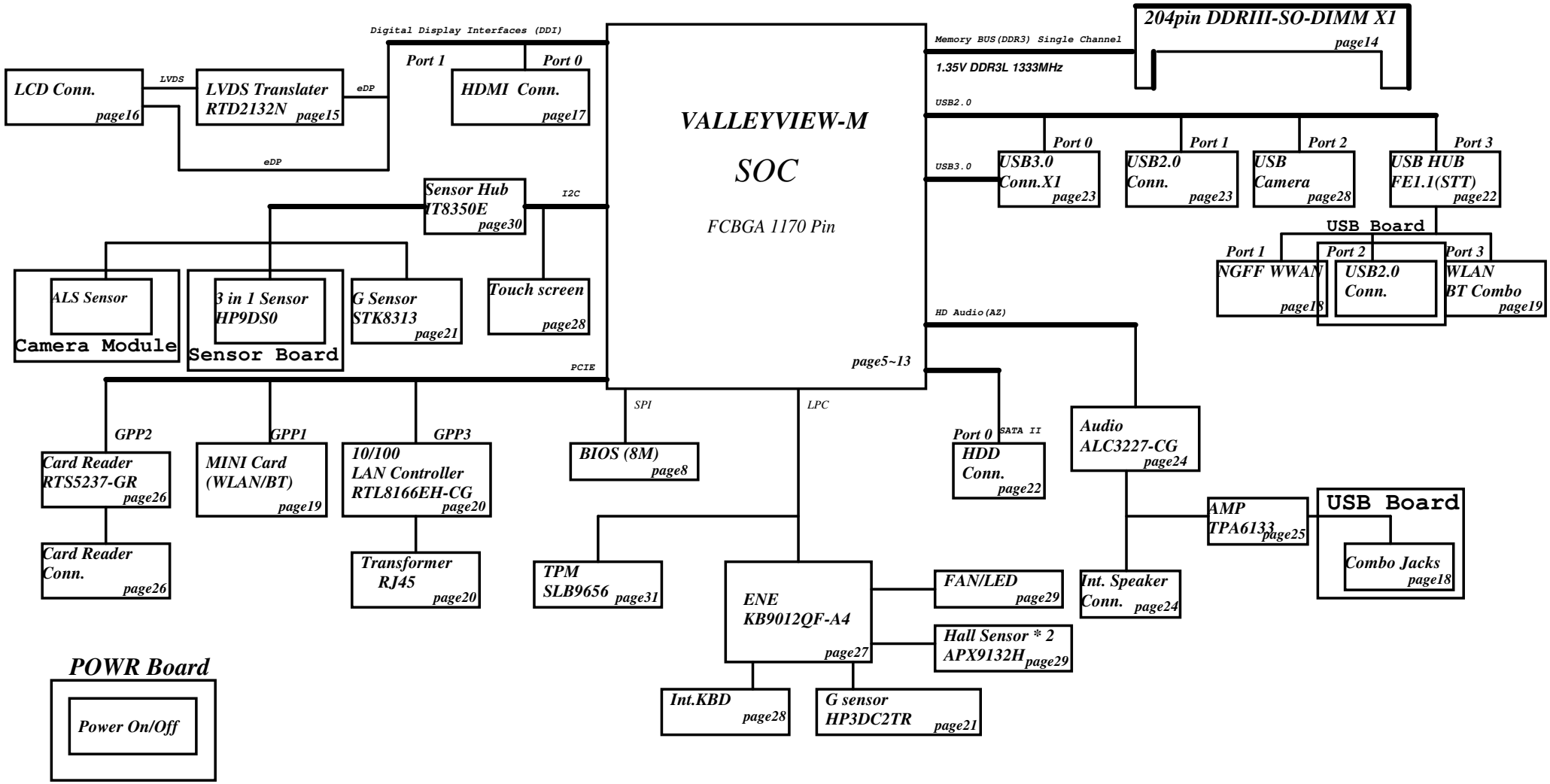


| Security Classification | Compal Secret Data | | | Compal Electronics, Inc. |
|---|---|---|---|---|
| Issued Date | 2014/01/14 | Deciphered Date | 2015/01/14 | Title: Block Diagrams |

THIS SHEET OF ENGINEERING DRAWING IS THE PROPRIETARY PROPERTY OF COMPAL ELECTRONICS, INC. AND CONTAINS CONFIDENTIAL AND TRADE SECRET INFORMATION. THIS SHEET MAY NOT BE TRANSFERED FROM THE CUSTODY OF THE COMPETENT DIVISION OF R&D DEPARTMENT EXCEPT AS AUTHORIZED BY COMPAL ELECTRONICS, INC. NEITHER THIS SHEET NOR THE INFORMATION IT CONTAINS MAY BE USED BY OR DISCLOSED TO ANY THIRD PARTY WITHOUT PRIOR WRITTEN CONSENT OF COMPAL ELECTRONICS, INC.

| Size | Document Number | Rev |
|---|---|---|
| Custom | LA-B151P | 1.0 |

Date: Tuesday, January 21, 2014 Sheet 2 of 48

## Voltage Rails

| Power Plane | Description | S0 | S3 | S4/S5 |
|---|---|---|---|---|
| VIN | 19V Adapter power supply | ON | ON | ON |
| BATT+ | 12V Battery power supply | ON | ON | ON |
| B+ | AC or battery power rail for power circuit. (19V/12V) | ON | ON | ON |
| +VSB | +VSBP to +VSB always on power rail for sequence control | ON | ON | ON |
| +RTCVCC | RTC Battery Power | ON | ON | ON |
| +1.0VALW | +1.0v Always power rail | ON | ON | ON |
| +1.2VALW | +1.2v Always power rail | ON | ON | ON |
| +1.8VALW | +1.8v Always power rail | ON | ON | ON |
| +3VALW | +3.3v Always power rail | ON | ON | ON |
| +5VALW | +5.0v Always power rail | ON | ON | ON |
| +1.35V | +1.35V power rail for DDR3L | ON | ON | OFF |
| +SOC_VCC | Core voltage for SOC | ON | OFF | OFF |
| +SOC_VNN | GFX voltage for SOC | ON | OFF | OFF |
| +0.675VS | +0.675V power rail for DDR3L Terminator | ON | OFF | OFF |
| +1.0VS | +1.0v system power rail | ON | OFF | OFF |
| +1.05VS | +1.05v system power rail | ON | OFF | OFF |
| +1.35VS | +1.35v system power rail | ON | OFF | OFF |
| +1.5VS | +1.5v system power rail | ON | OFF | OFF |
| +1.8VS | +1.8v system power rail | ON | OFF | OFF |
| +3VS | +3.3v system power rail | ON | OFF | OFF |
| +5VS | +5.0v system power rail | ON | OFF | OFF |
| | | | | |
| | | | | |
| | | | | |

Note : ON* means that this power plane is ON only with AC power available, otherwise it is OFF.

## Board ID / SKU ID Table for AD channel

| Vcc | 3.3V +/- 1% | | | |
|---|---|---|---|---|
| Ra/Rc/Re | 100K +/- 1% | | | |
| Board ID | Rb / Rd / Rf | $V_{AD_BID}$ min | $V_{AD_BID}$ typ | $V_{AD_BID}$ max |
| 0 | 0 | 0 V | 0 V | 0.300V |
| 1 | 12K+/- 1% | 0.307V | 0.354V | 0.360V |
| 2 | 15K+/- 1% | 0.423V | 0.430V | 0.438V |
| 3 | 20K+/- 1% | 0.541V | 0.550V | 0.559V |
| 4 | 27K+/- 1% | 0.691V | 0.702V | 0.713V |
| 5 | 33K+/- 1% | 0.807V | 0.819V | 0.831V |
| 6 | 43K+/- 1% | 0.978V | 0.992V | 1.006V |
| 7 | 56K+/- 1% | 1.169V | 1.185V | 1.200V |

## BOARD ID Table

| Board ID | PCB Revision |
|---|---|
| 0 | 0.1 |
| 1 | 0.2 |
| 2 | 0.3 |
| 3 | 1.0 |
| 4 | |
| 5 | |
| 6 | |
| | |

## BOM Option Table

| BTO Item | BOM Structure |
|---|---|
| Unpop | @ |
| Connector | CONN@ |
| EMI requirement | EMI@ |
| ESD requirement | ESD@ |
| EMI requirement unpop | @EMI@ |
| ESD requirement unpop | @ESD@ |
| For Debug | DB@ |
| For LVDS Panel | LVDS@ |
| For eDP Panel | eDP@ |
| RF requirement | RF@ |
| PIR Item 64 | |
| RF requirement unpop | @RF@ |
| For TPM | TPM@ |
| | |
| | |

## EC SM Bus1 address

| Device | Address | | |
|---|---|---|---|
| Accelerometer | 52 | 01010010 | U25 |
| Charger | | | |
| Battery | | | |
| Home Key | 60 | 01100000 | |

## SOC SM Bus address

| Device | Address | | |
|---|---|---|---|
| ChannelA | A0 | 10100000 | JDIMM1 |
| Thermal Sensor | 4D | 01001101 | UC3 |

## Sensor Hub address

| Device | Address | | |
|---|---|---|---|
| Accelerometer | 22 | 00100010 | U2101 |
| MPU9250 | 68 | 01101000 | U2(SenSor/B) |

## BOM config

| PCB P/N | |
|---|---|
| 4319S432L01 | EMI@/ESD@/LVDS@/DB@/RF@/N3520@ |
| 4319S432L02 | EMI@/ESD@/LVDS@/DB@/RF@/N2820@ |
| | |

## 43 level BOM table

| 43 Level | Description | BOM Structure |
|---|---|---|
| 4319S432L01 | SMT MB AB151 ZPT10 N3510 4.5W HDMI R1 | |
| 4319S432L02 | SMT MB AB151 ZPT10 N2810 4.5W HDMI R1 | |
| | | |

DAX

PCB
Part Number = DA600149000
PCB 150 LA-B151P REV0 M/B 3

ZZZ1

HDMI
Part Number = RO0000003HM
PCB 102 LA-B151P REV0 M/B 3
45@

PIR Item 50

USOC1 N3520@

CPU
Part Number = SA00007E940
S IC FH8065301616103 SR1SE B3 2.17G BGA

USOC1 N2820@

CPU
Part Number = SA00007EK30
S IC FH8065301616603 SR1SG B3 2.13G BGA

| Security Classification | Compal Secret Data | | |
|---|---|---|---|
| Issued Date | 2014/01/14 | Deciphered Date | 2015/01/14 |

THIS SHEET OF ENGINEERING DRAWING IS THE PROPRIETARY PROPERTY OF COMPAL ELECTRONICS, INC. AND CONTAINS CONFIDENTIAL AND TRADE SECRET INFORMATION. THIS SHEET MAY NOT BE TRANSFERED FROM THE CUSTODY OF THE COMPETENT DIVISION OF R&D DEPARTMENT EXCEPT AS AUTHORIZED BY COMPAL ELECTRONICS, INC. NEITHER THIS SHEET NOR THE INFORMATION IT CONTAINS MAY BE USED BY OR DISCLOSED TO ANY THIRD PARTY WITHOUT PRIOR WRITTEN CONSENT OF COMPAL ELECTRONICS, INC.

Compal Electronics, Inc.

Title: Notes List

Size: Custom | Document Number: LA-B151P | Rev: 1.0

Date: Tuesday, January 21, 2014 | Sheet 3 of 48

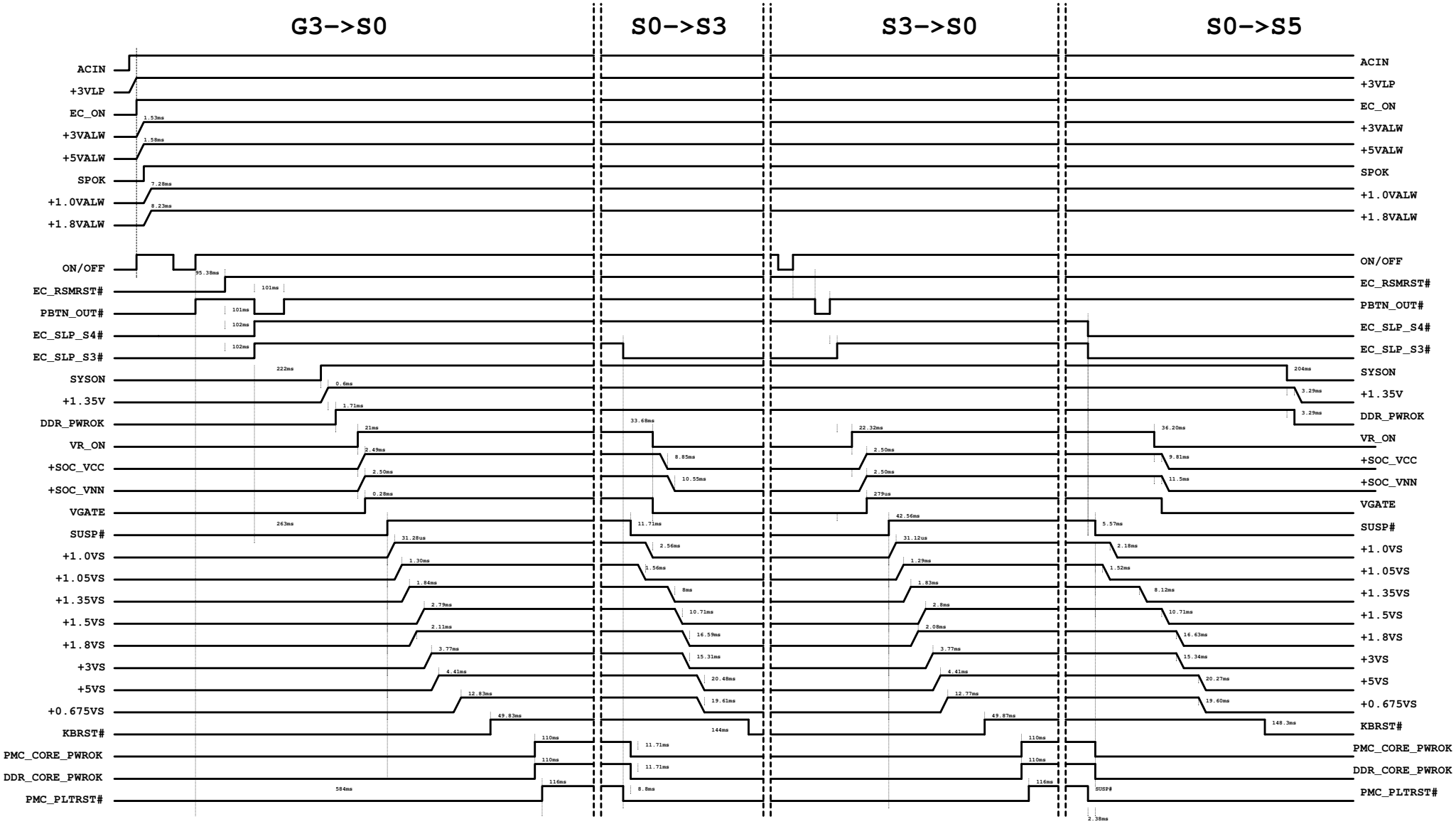


| Security Classification | Compal Secret Data | | |
|---|---|---|---|
| Issued Date | 2014/01/14 | Deciphered Date | 2015/01/14 |

THIS SHEET OF ENGINEERING DRAWING IS THE PROPRIETARY PROPERTY OF COMPAL ELECTRONICS, INC. AND CONTAINS CONFIDENTIAL AND TRADE SECRET INFORMATION. THIS SHEET MAY NOT BE TRANSFERED FROM THE CUSTODY OF THE COMPETENT DIVISION OF R&D DEPARTMENT EXCEPT AS AUTHORIZED BY COMPAL ELECTRONICS, INC. NEITHER THIS SHEET NOR THE INFORMATION IT CONTAINS MAY BE USED BY OR DISCLOSED TO ANY THIRD PARTY WITHOUT PRIOR WRITTEN CONSENT OF COMPAL ELECTRONICS, INC.

*Compal Electronics, Inc.*

Title: ***Power Sequence***

Size: C | Document Number: ***LA-B151P*** | Rev: 1.0

Date: Tuesday, January 21, 2014 | Sheet 4 of 48

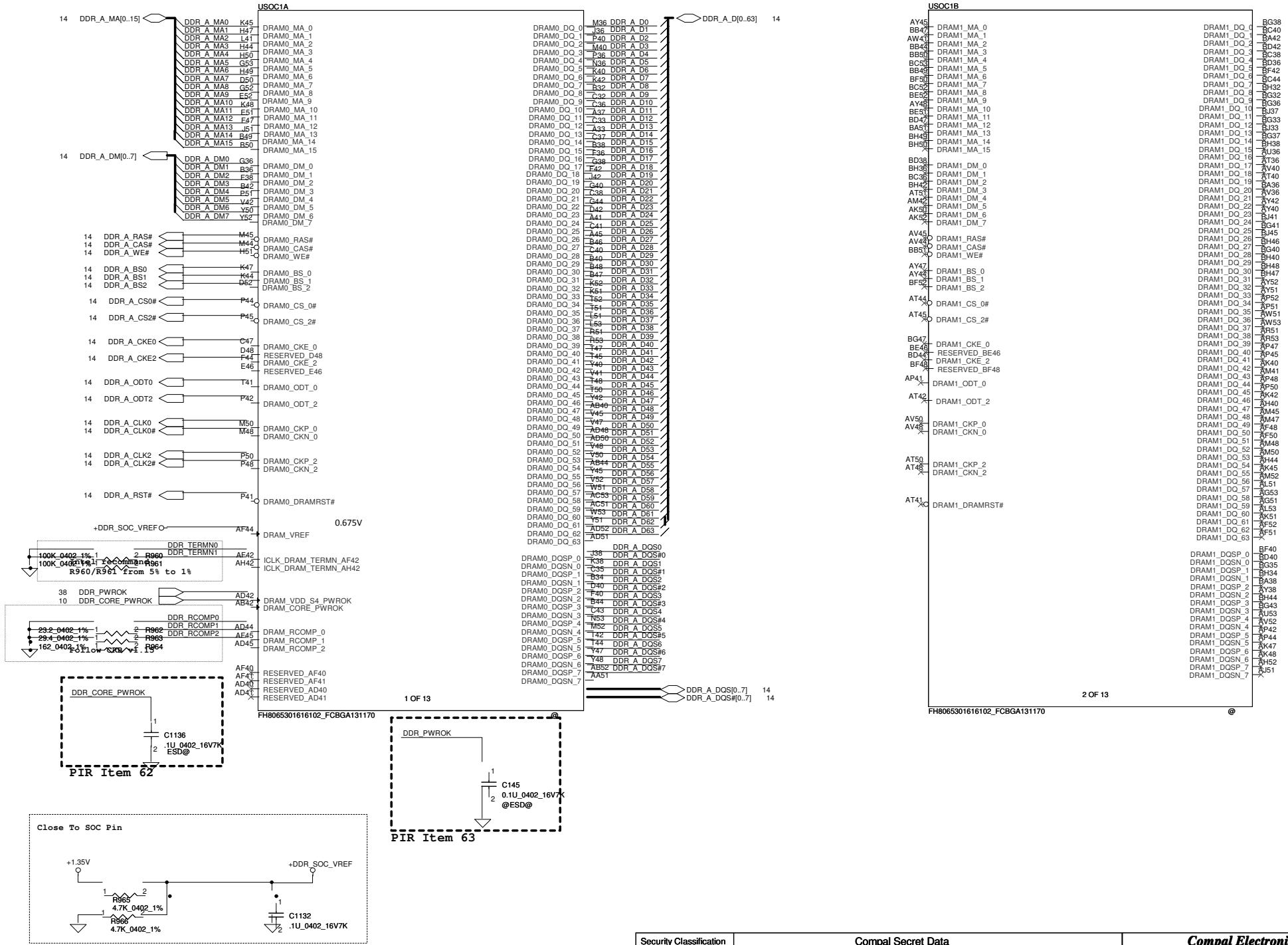


| Security Classification | Compal Secret Data | | |
|---|---|---|---|
| Issued Date | 2014/01/14 | Deciphered Date | 2015/01/14 |

THIS SHEET OF ENGINEERING DRAWING IS THE PROPRIETARY PROPERTY OF COMPAL ELECTRONICS, INC. AND CONTAINS CONFIDENTIAL AND TRADE SECRET INFORMATION. THIS SHEET MAY NOT BE TRANSFERED FROM THE CUSTODY OF THE COMPETENT DIVISION OF R&D DEPARTMENT EXCEPT AS AUTHORIZED BY COMPAL ELECTRONICS, INC. NEITHER THIS SHEET NOR THE INFORMATION IT CONTAINS MAY BE USED BY OR DISCLOSED TO ANY THIRD PARTY WITHOUT PRIOR WRITTEN CONSENT OF COMPAL ELECTRONICS, INC.

**Compal Electronics, Inc.**

Title: **VLV-M SOC Memory DDR3L**

Size: Custom | Document Number: **LA-B151P** | Rev: 1.0

Date: Tuesday, January 21, 2014 | Sheet 5 of 48

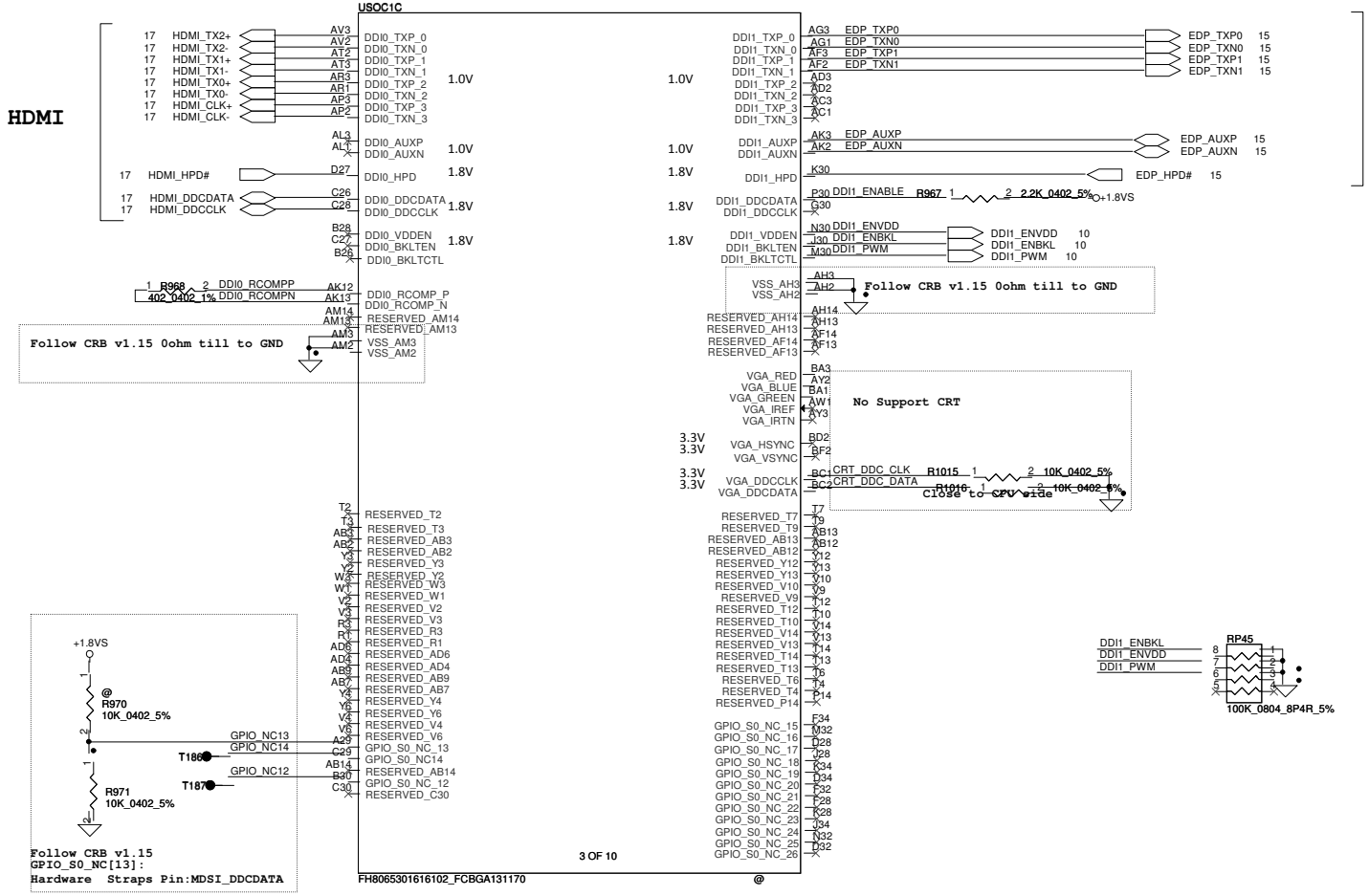


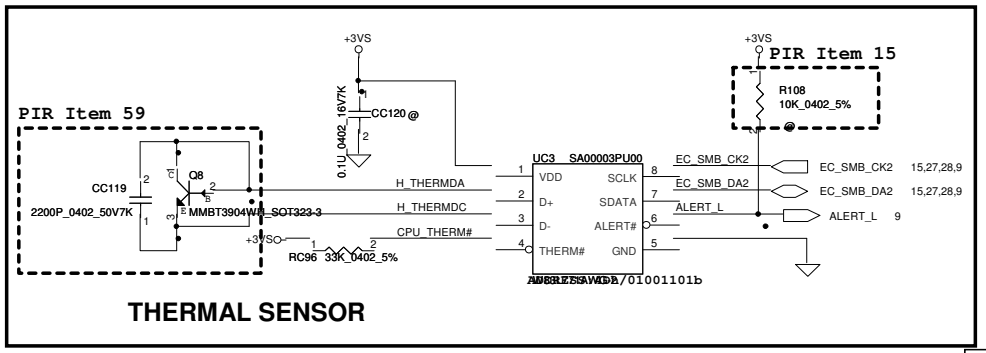


| Security Classification | Compal Secret Data | | |
|---|---|---|---|
| Issued Date | 2014/01/14 | Deciphered Date | 2015/01/14 |

THIS SHEET OF ENGINEERING DRAWING IS THE PROPRIETARY PROPERTY OF COMPAL ELECTRONICS, INC. AND CONTAINS CONFIDENTIAL AND TRADE SECRET INFORMATION. THIS SHEET MAY NOT BE TRANSFERED FROM THE CUSTODY OF THE COMPETENT DIVISION OF R&D DEPARTMENT EXCEPT AS AUTHORIZED BY COMPAL ELECTRONICS, INC. NEITHER THIS SHEET NOR THE INFORMATION IT CONTAINS MAY BE USED BY OR DISCLOSED TO ANY THIRD PARTY WITHOUT PRIOR WRITTEN CONSENT OF COMPAL ELECTRONICS, INC.

**Compal Electronics, Inc.**

Title: **VLV-M SOC Display**

Size: Custom | Document Number: **LA-B151P** | Rev: 1.0

Date: Tuesday, January 21, 2014 | Sheet 6 of 48

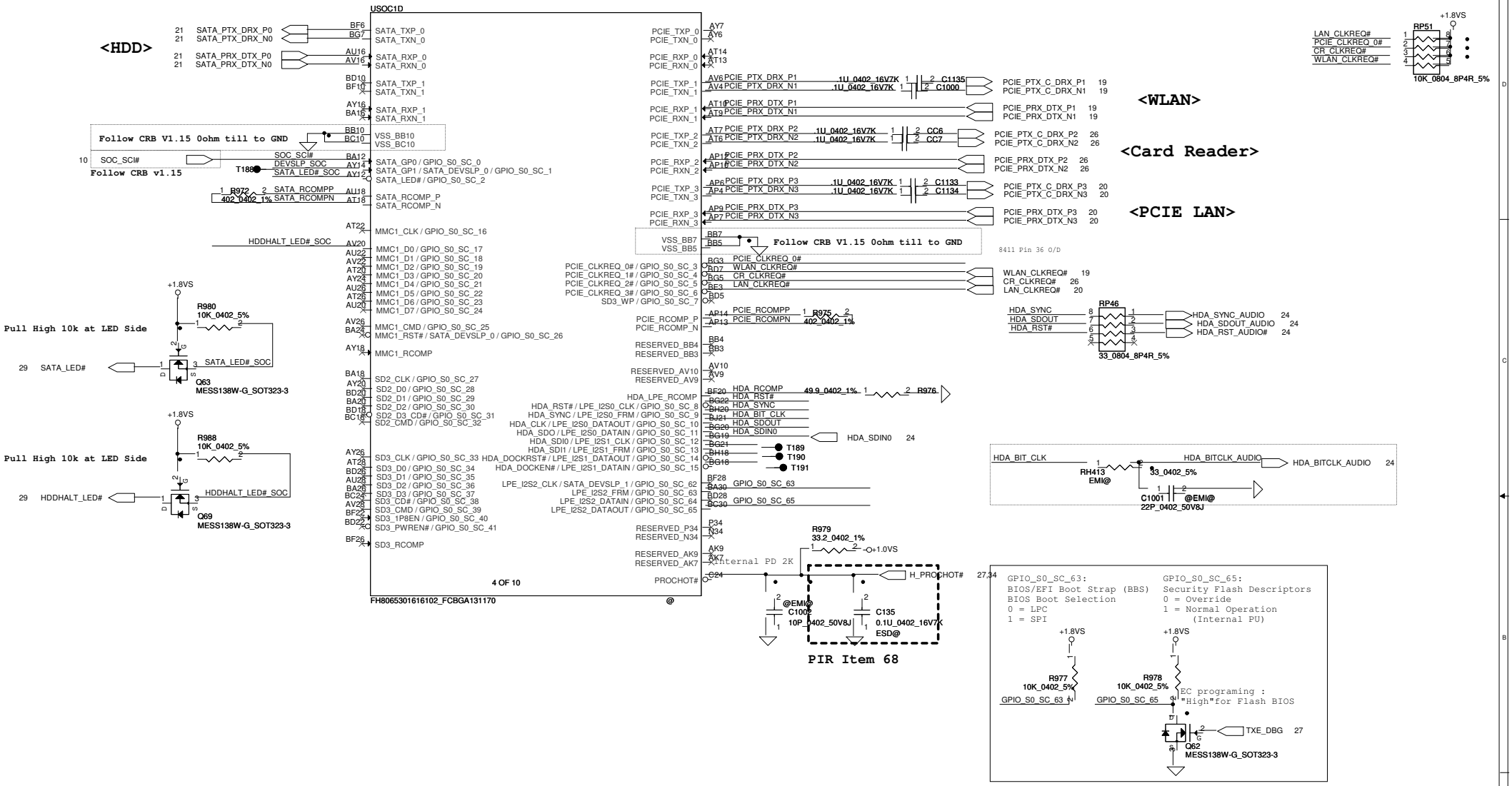


| Security Classification | Compal Secret Data | | |
|---|---|---|---|
| Issued Date | 2014/01/14 | Deciphered Date | 2015/01/14 |

THIS SHEET OF ENGINEERING DRAWING IS THE PROPRIETARY PROPERTY OF COMPAL ELECTRONICS, INC. AND CONTAINS CONFIDENTIAL AND TRADE SECRET INFORMATION. THIS SHEET MAY NOT BE TRANSFERED FROM THE CUSTODY OF THE COMPETENT DIVISION OF R&D DEPARTMENT EXCEPT AS AUTHORIZED BY COMPAL ELECTRONICS, INC. NEITHER THIS SHEET NOR THE INFORMATION IT CONTAINS MAY BE USED BY OR DISCLOSED TO ANY THIRD PARTY WITHOUT PRIOR WRITTEN CONSENT OF COMPAL ELECTRONICS, INC.

**Compal Electronics, Inc.**

Title: **VLV-M SOC SATA/PCI-E/HDA**

Size: Custom | Document Number: **LA-B151P** | Rev: 1.0

Date: Tuesday, January 21, 2014 | Sheet 7 of 48

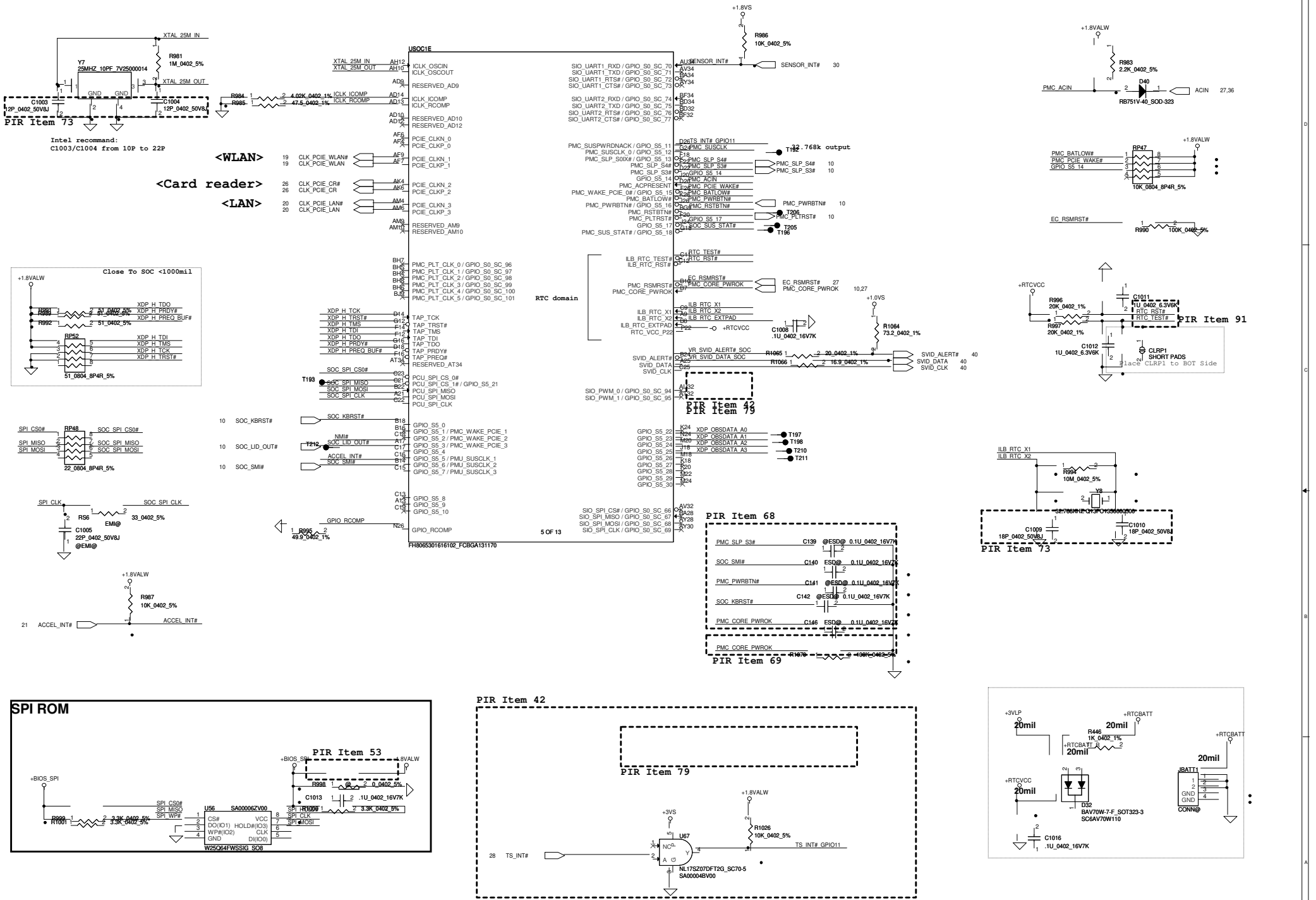


| Security Classification | Compal Secret Data | | |
|---|---|---|---|
| Issued Date | 2014/01/14 | Deciphered Date | 2015/01/14 |

THIS SHEET OF ENGINEERING DRAWING IS THE PROPRIETARY PROPERTY OF COMPAL ELECTRONICS, INC. AND CONTAINS CONFIDENTIAL AND TRADE SECRET INFORMATION. THIS SHEET MAY NOT BE TRANSFERED FROM THE CUSTODY OF THE COMPETENT DIVISION OF R&D DEPARTMENT EXCEPT AS AUTHORIZED BY COMPAL ELECTRONICS, INC. NEITHER THIS SHEET NOR THE INFORMATION IT CONTAINS MAY BE USED BY OR DISCLOSED TO ANY THIRD PARTY WITHOUT PRIOR WRITTEN CONSENT OF COMPAL ELECTRONICS, INC.

**Compal Electronics, Inc.**

Title: **VLV-M SOC CLK/PMU/SPI**

| Size | Document Number | Rev |
|---|---|---|
| C | LA-B151P | 1.0 |

Date: Tuesday, January 21, 2014 | Sheet 8 of 48

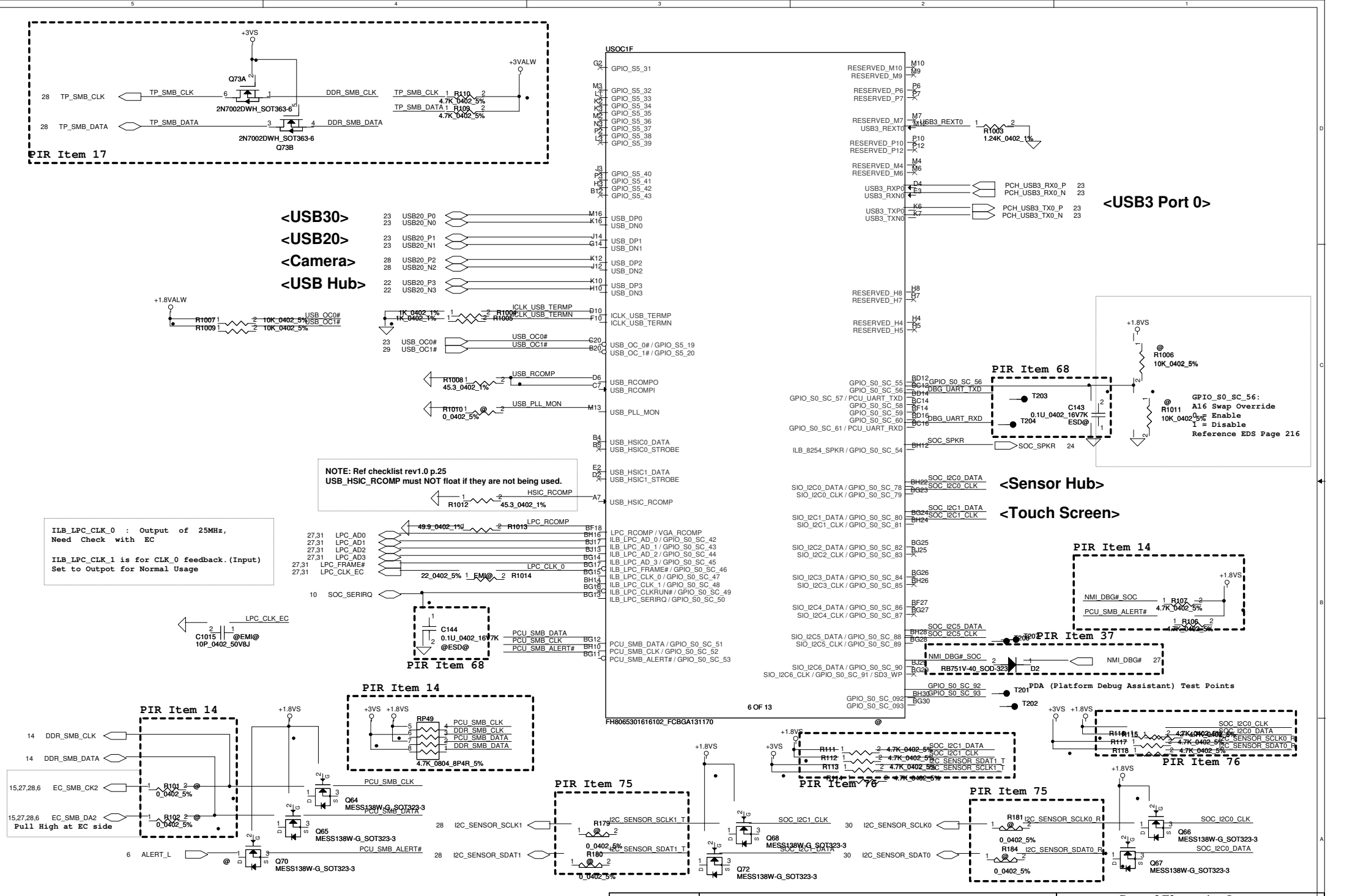


| Security Classification | Compal Secret Data | | | Compal Electronics, Inc. |
|---|---|---|---|---|
| Issued Date | 2014/01/14 | Deciphered Date | 2015/01/14 | Title: VLV-M SOC USB/LPC/SMBus |

THIS SHEET OF ENGINEERING DRAWING IS THE PROPRIETARY PROPERTY OF COMPAL ELECTRONICS, INC. AND CONTAINS CONFIDENTIAL AND TRADE SECRET INFORMATION. THIS SHEET MAY NOT BE TRANSFERED FROM THE CUSTODY OF THE COMPETENT DIVISION OF R&D DEPARTMENT EXCEPT AS AUTHORIZED BY COMPAL ELECTRONICS, INC. NEITHER THIS SHEET NOR THE INFORMATION IT CONTAINS MAY BE USED BY OR DISCLOSED TO ANY THIRD PARTY WITHOUT PRIOR WRITTEN CONSENT OF COMPAL ELECTRONICS, INC.

| Size | Document Number | Rev |
|---|---|---|
| Custom | LA-B151P | 1.0 |

Date: Tuesday, January 21, 2014 Sheet 9 of 48

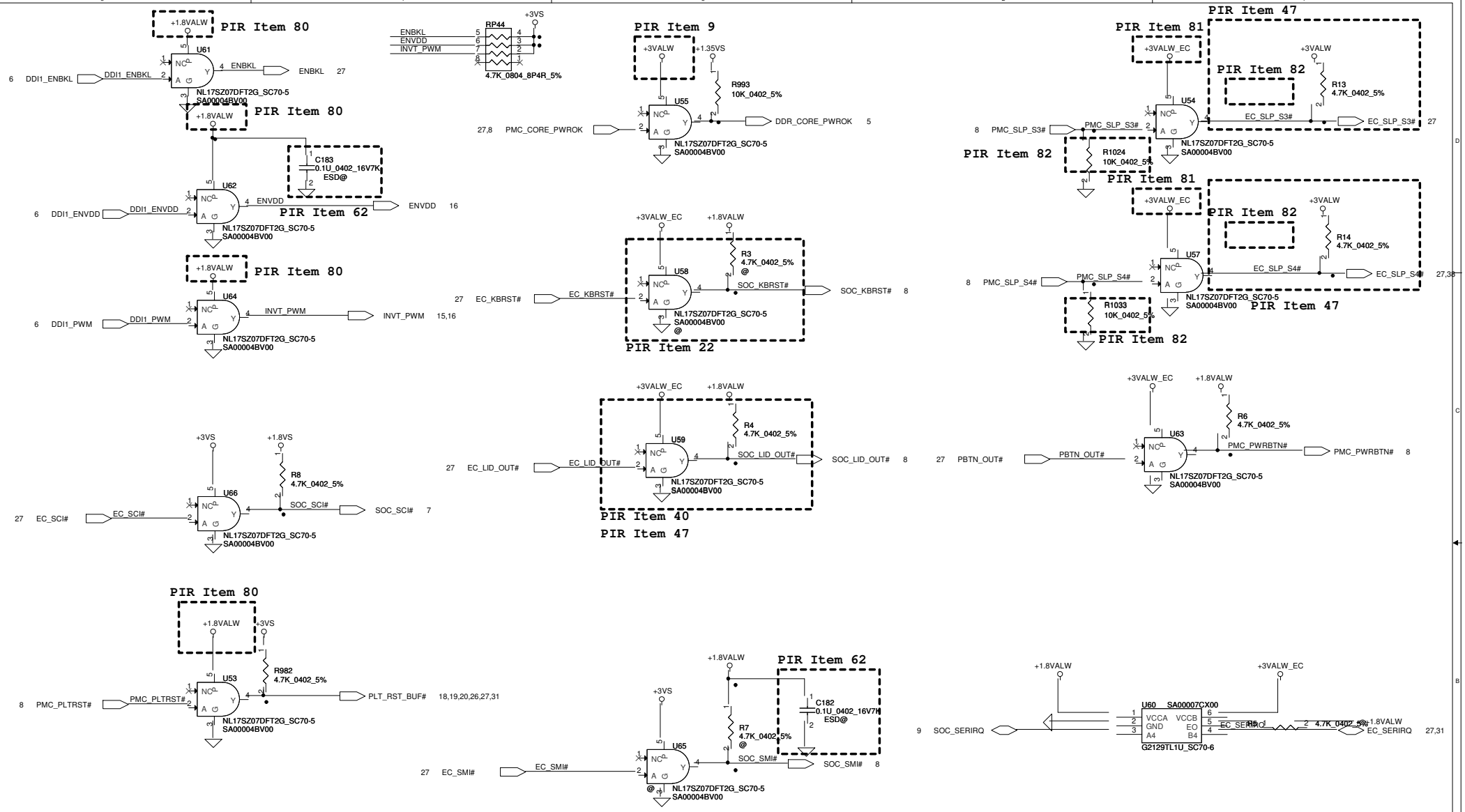


| Security Classification | Compal Secret Data | | |
|---|---|---|---|
| Issued Date | 2014/01/14 | Deciphered Date | 2015/01/14 |

THIS SHEET OF ENGINEERING DRAWING IS THE PROPRIETARY PROPERTY OF COMPAL ELECTRONICS, INC. AND CONTAINS CONFIDENTIAL AND TRADE SECRET INFORMATION. THIS SHEET MAY NOT BE TRANSFERED FROM THE CUSTODY OF THE COMPETENT DIVISION OF R&D DEPARTMENT EXCEPT AS AUTHORIZED BY COMPAL ELECTRONICS, INC. NEITHER THIS SHEET NOR THE INFORMATION IT CONTAINS MAY BE USED BY OR DISCLOSED TO ANY THIRD PARTY WITHOUT PRIOR WRITTEN CONSENT OF COMPAL ELECTRONICS, INC.

**Compal Electronics, Inc.**

Title: **VLV-M SOC Level Shifter**

Size: Custom | Document Number: **LA-B151P** | Rev: 1.0

Date: Tuesday, January 21, 2014 | Sheet 10 of 48

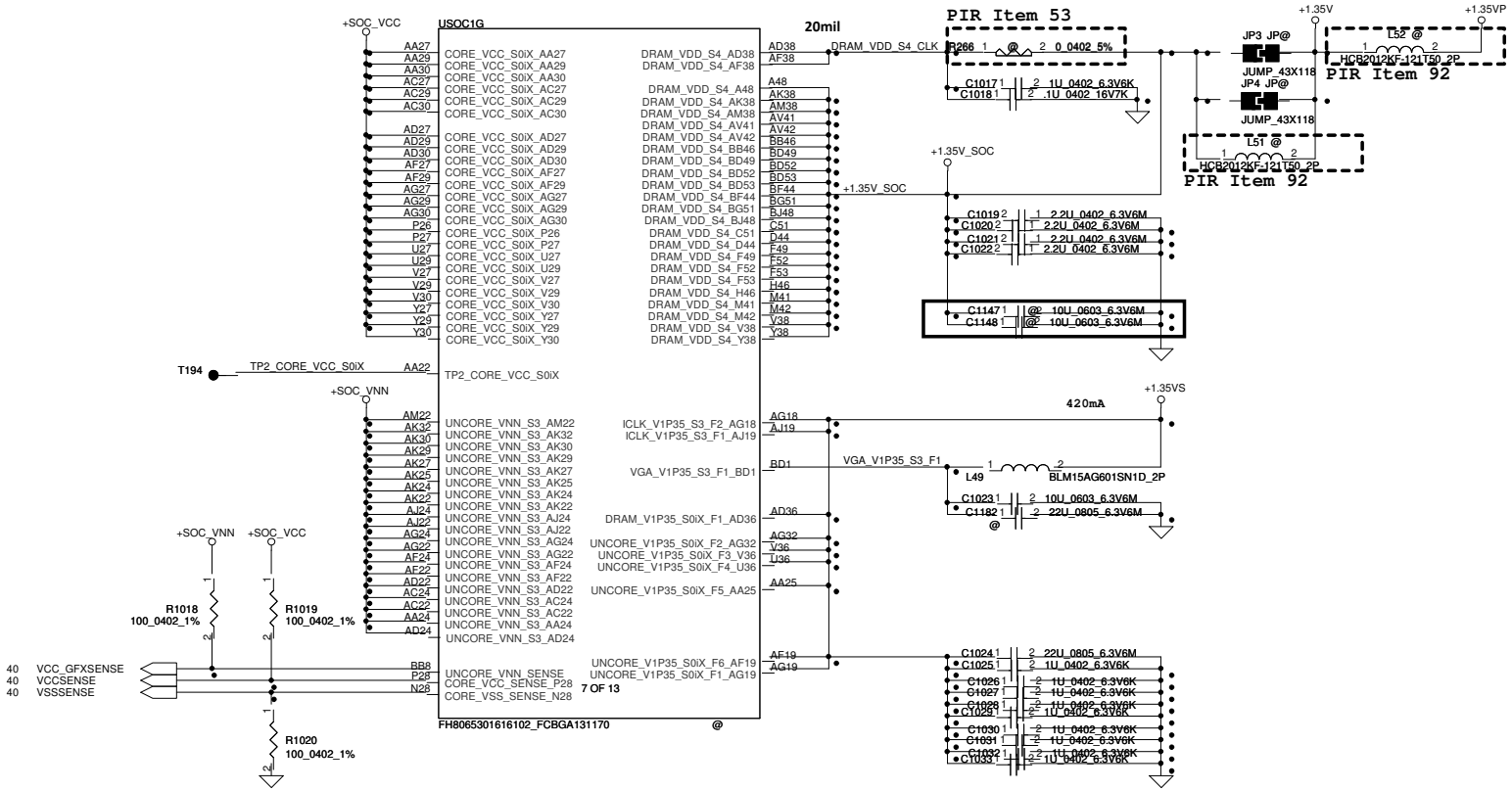


| Security Classification | Compal Secret Data | | | Compal Electronics, Inc. |
|---|---|---|---|---|
| Issued Date | 2014/01/14 | Deciphered Date | 2015/01/14 | Title: VLV-M SOC Power |
| THIS SHEET OF ENGINEERING DRAWING IS THE PROPRIETARY PROPERTY OF COMPAL ELECTRONICS, INC. AND CONTAINS CONFIDENTIAL AND TRADE SECRET INFORMATION. THIS SHEET MAY NOT BE TRANSFERED FROM THE CUSTODY OF THE COMPETENT DIVISION OF R&D DEPARTMENT EXCEPT AS AUTHORIZED BY COMPAL ELECTRONICS, INC. NEITHER THIS SHEET NOR THE INFORMATION IT CONTAINS MAY BE USED BY OR DISCLOSED TO ANY THIRD PARTY WITHOUT PRIOR WRITTEN CONSENT OF COMPAL ELECTRONICS, INC. | | | | Size: Custom; Document Number: LA-B151P; Rev: 1.0 |
| | | | | Date: Tuesday, January 21, 2014; Sheet 11 of 48 |

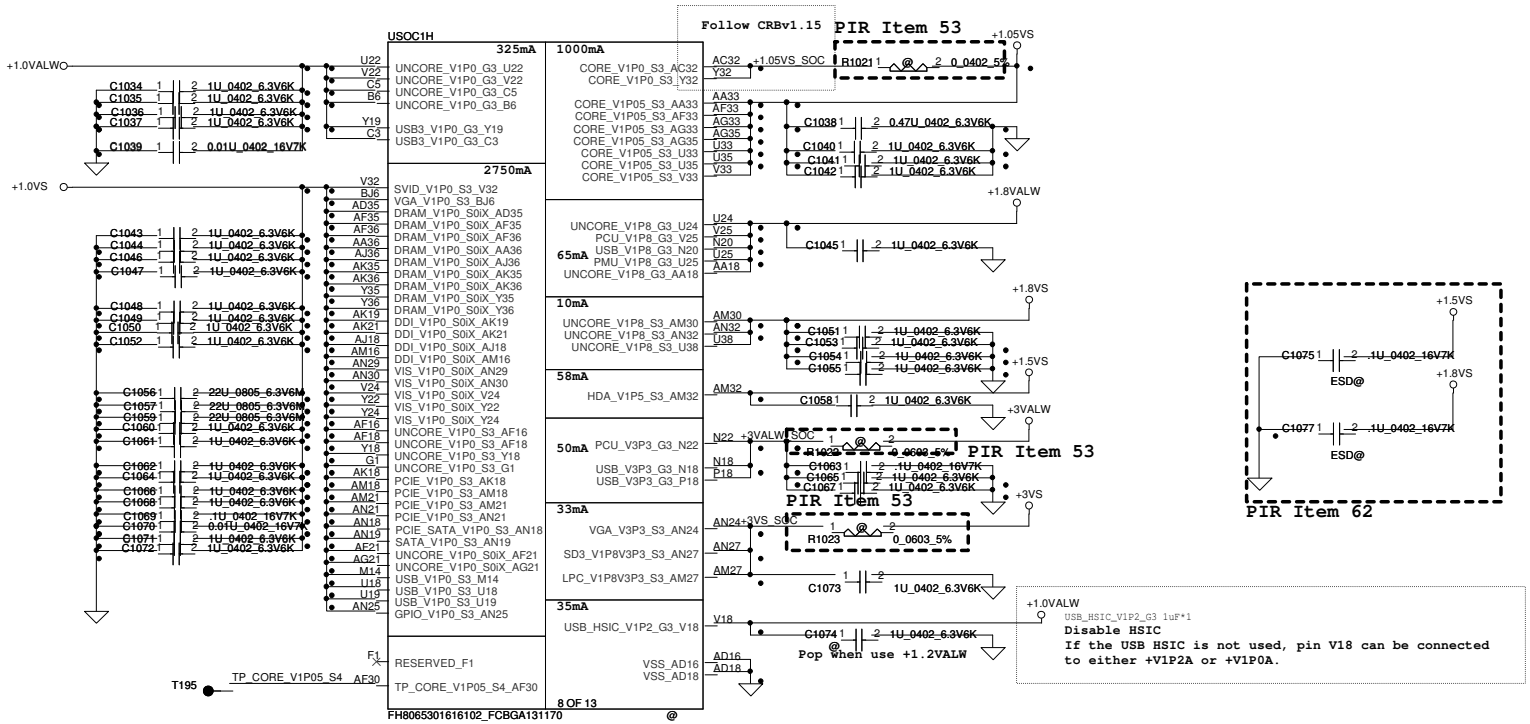


| Security Classification | Compal Secret Data | | | Compal Electronics, Inc. |
|---|---|---|---|---|
| Issued Date | 2014/01/14 | Deciphered Date | 2015/01/14 | Title: VLV-M SOC Power |
| | | | | Size: Custom; Document Number: LA-B151P; Rev: 1.0 |
| | | | | Date: Tuesday, January 21, 2014; Sheet 12 of 48 |

THIS SHEET OF ENGINEERING DRAWING IS THE PROPRIETARY PROPERTY OF COMPAL ELECTRONICS, INC. AND CONTAINS CONFIDENTIAL AND TRADE SECRET INFORMATION. THIS SHEET MAY NOT BE TRANSFERED FROM THE CUSTODY OF THE COMPETENT DIVISION OF R&D DEPARTMENT EXCEPT AS AUTHORIZED BY COMPAL ELECTRONICS, INC. NEITHER THIS SHEET NOR THE INFORMATION IT CONTAINS MAY BE USED BY OR DISCLOSED TO ANY THIRD PARTY WITHOUT PRIOR WRITTEN CONSENT OF COMPAL ELECTRONICS, INC.

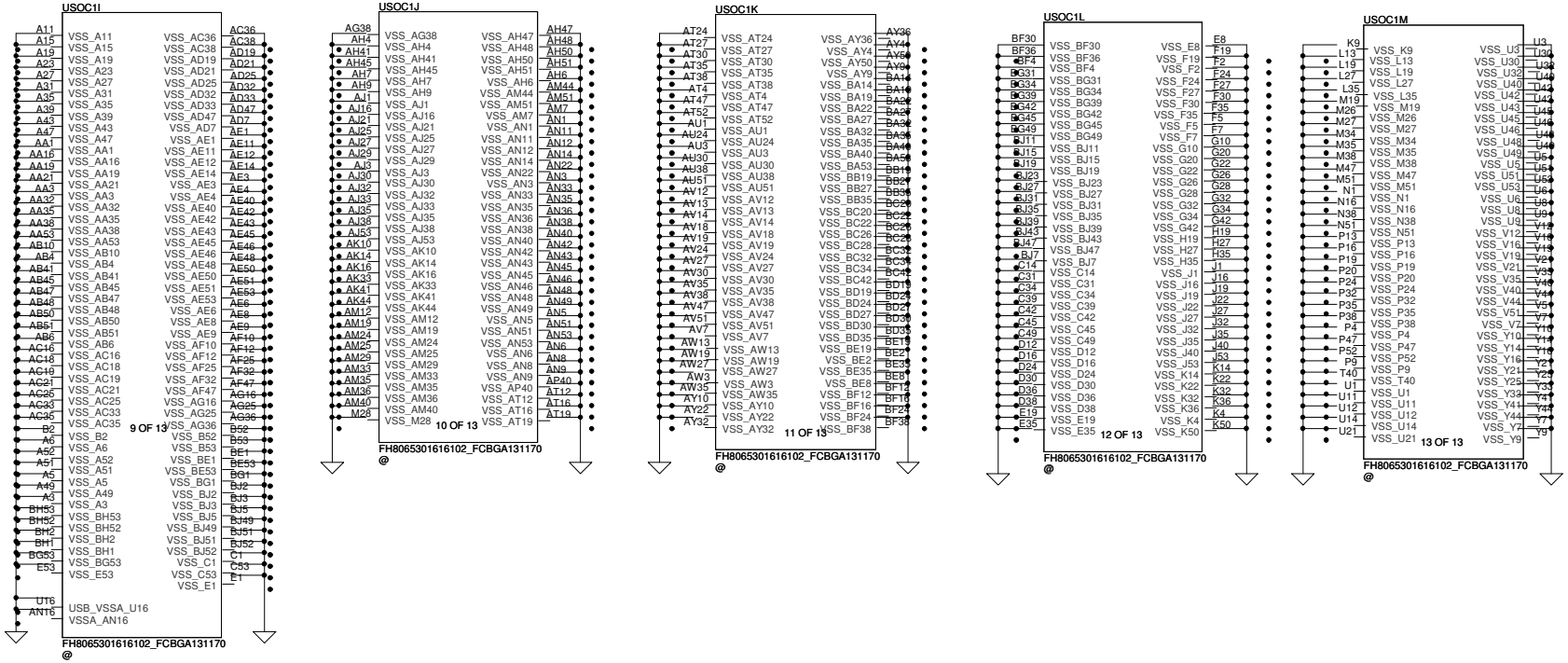


| Security Classification | Compal Secret Data | | |
|---|---|---|---|
| Issued Date | 2014/01/14 | Deciphered Date | 2015/01/14 |

THIS SHEET OF ENGINEERING DRAWING IS THE PROPRIETARY PROPERTY OF COMPAL ELECTRONICS, INC. AND CONTAINS CONFIDENTIAL AND TRADE SECRET INFORMATION. THIS SHEET MAY NOT BE TRANSFERED FROM THE CUSTODY OF THE COMPETENT DIVISION OF R&D DEPARTMENT EXCEPT AS AUTHORIZED BY COMPAL ELECTRONICS, INC. NEITHER THIS SHEET NOR THE INFORMATION IT CONTAINS MAY BE USED BY OR DISCLOSED TO ANY THIRD PARTY WITHOUT PRIOR WRITTEN CONSENT OF COMPAL ELECTRONICS, INC.

**Compal Electronics, Inc.**

Title: **VLV-M SOC GND**

Size: Custom | Document Number: **LA-B151P** | Rev: 1.0

Date: Tuesday, January 21, 2014 | Sheet 13 of 48

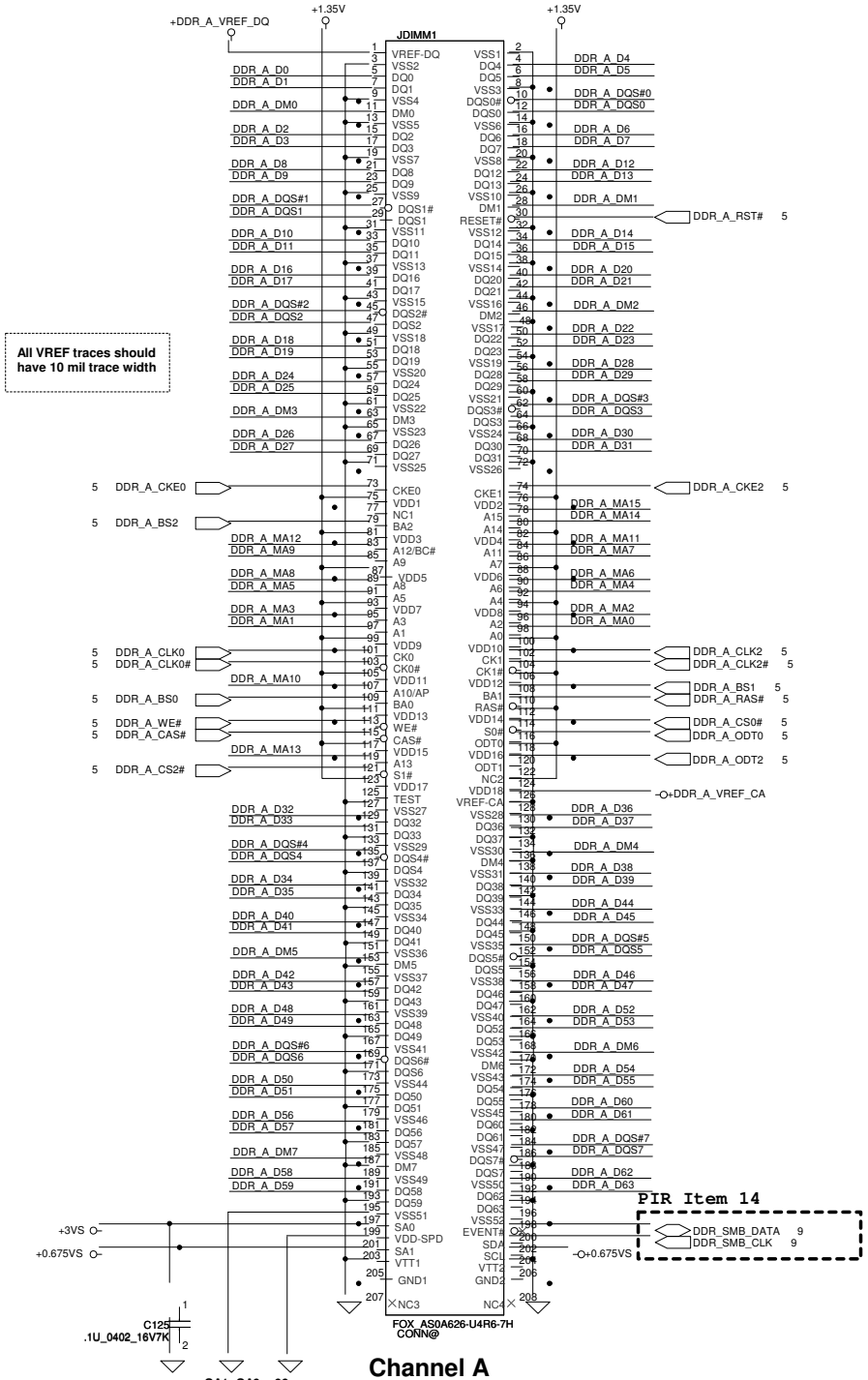


DDR_A_DQS#[0..7] 5
DDR_A_DQS[0..7] 5
DDR_A_D[0..63] 5
DDR_A_MA[0..15] 5
DDR_A_DM[0..7] 5

Signal voltage level = 0.675 V
PLACE TWO 4.7K RESISTORS CLOSE TO
DIMMS ON DIMM_VREF_CA / DIMM_VREF_DQ
Decoupling caps are needed; one 0.1 µF placed close to VREF pins of each DDR3 SODIMM.

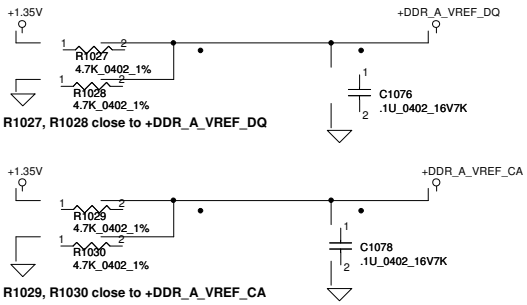


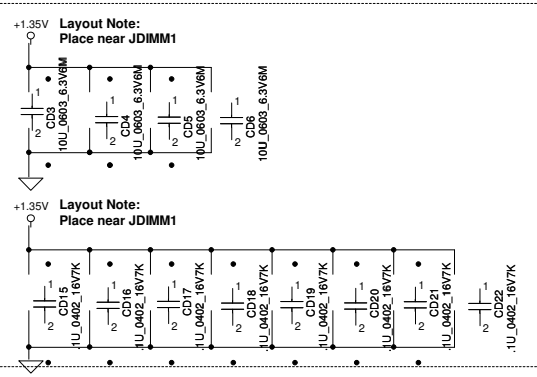


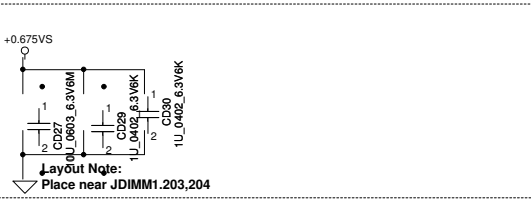


| Security Classification | Compal Secret Data | | | Compal Electronics, Inc. |
|---|---|---|---|---|
| Issued Date | 2014/01/14 | Deciphered Date | 2015/01/14 | Title: DDR3L DIMMA |

THIS SHEET OF ENGINEERING DRAWING IS THE PROPRIETARY PROPERTY OF COMPAL ELECTRONICS, INC. AND CONTAINS CONFIDENTIAL AND TRADE SECRET INFORMATION. THIS SHEET MAY NOT BE TRANSFERED FROM THE CUSTODY OF THE COMPETENT DIVISION OF R&D DEPARTMENT EXCEPT AS AUTHORIZED BY COMPAL ELECTRONICS, INC. NEITHER THIS SHEET NOR THE INFORMATION IT CONTAINS MAY BE USED BY OR DISCLOSED TO ANY THIRD PARTY WITHOUT PRIOR WRITTEN CONSENT OF COMPAL ELECTRONICS, INC.

| Size | Document Number | Rev |
|---|---|---|
| Custom | LA-B151P | 1.0 |

Date: Tuesday, January 21, 2014 Sheet 14 of 48

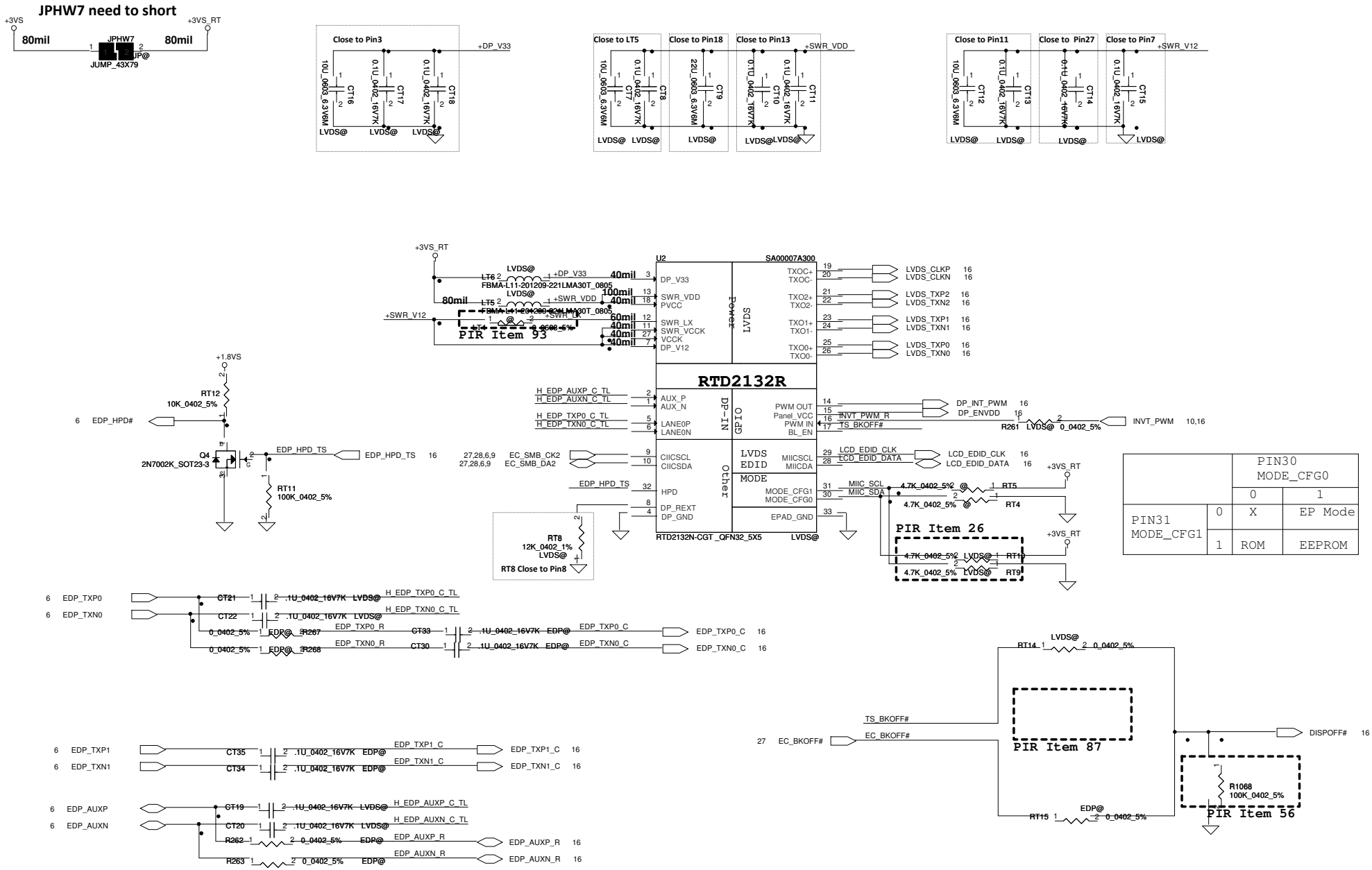


| Security Classification | Compal Secret Data | | |
|---|---|---|---|
| Issued Date | 2014/01/14 | Deciphered Date | 2015/01/14 |

THIS SHEET OF ENGINEERING DRAWING IS THE PROPRIETARY PROPERTY OF COMPAL ELECTRONICS, INC. AND CONTAINS CONFIDENTIAL AND TRADE SECRET INFORMATION. THIS SHEET MAY NOT BE TRANSFERED FROM THE CUSTODY OF THE COMPETENT DIVISION OF R&D DEPARTMENT EXCEPT AS AUTHORIZED BY COMPAL ELECTRONICS, INC. NEITHER THIS SHEET NOR THE INFORMATION IT CONTAINS MAY BE USED BY OR DISCLOSED TO ANY THIRD PARTY WITHOUT PRIOR WRITTEN CONSENT OF COMPAL ELECTRONICS, INC.

**Compal Electronics, Inc.**

Title: *LVDS Translator-RTD2132N-CGT*

Size: | Document Number: LA-B151P | Rev: 1.0

Date: Tuesday, January 21, 2014 | Sheet 15 of 48

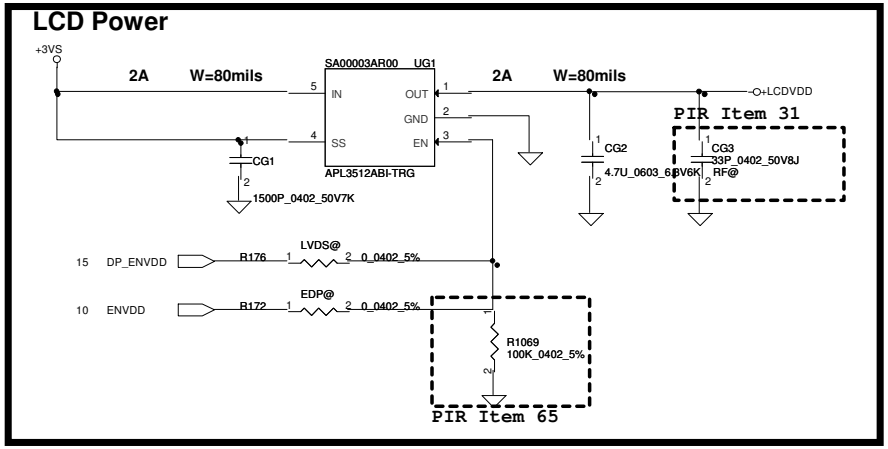


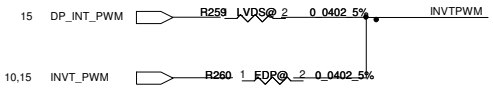


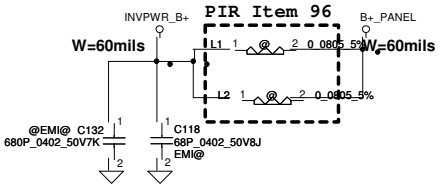


## LCD PANEL Conn.

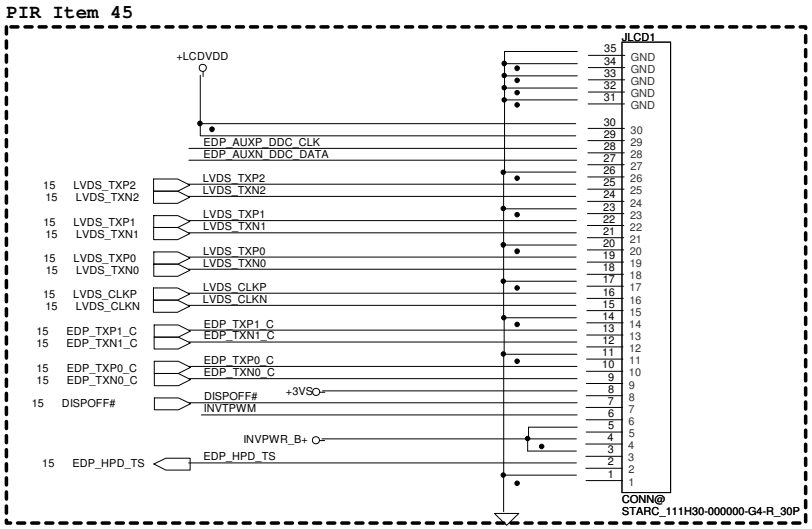


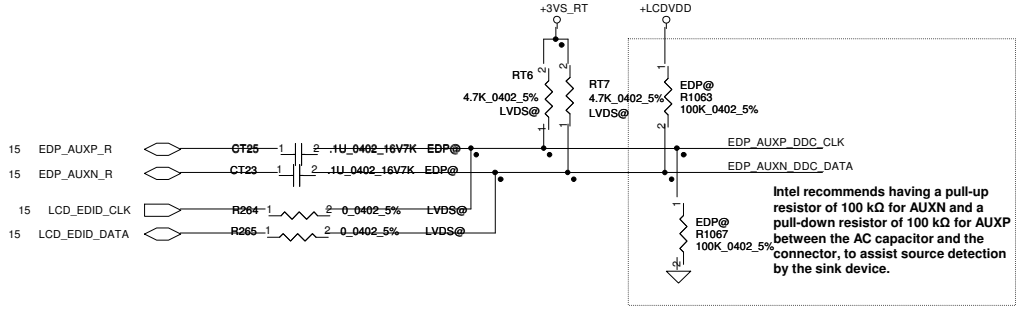


| Security Classification | Compal Secret Data | | |
|---|---|---|---|
| Issued Date | 2014/01/14 | Deciphered Date | 2015/01/14 |

THIS SHEET OF ENGINEERING DRAWING IS THE PROPRIETARY PROPERTY OF COMPAL ELECTRONICS, INC. AND CONTAINS CONFIDENTIAL AND TRADE SECRET INFORMATION. THIS SHEET MAY NOT BE TRANSFERED FROM THE CUSTODY OF THE COMPETENT DIVISION OF R&D DEPARTMENT EXCEPT AS AUTHORIZED BY COMPAL ELECTRONICS, INC. NEITHER THIS SHEET NOR THE INFORMATION IT CONTAINS MAY BE USED BY OR DISCLOSED TO ANY THIRD PARTY WITHOUT PRIOR WRITTEN CONSENT OF COMPAL ELECTRONICS, INC.

**Compal Electronics, Inc.**

Title: **LCD CONN**

Document Number: LA-B151P

Rev: 1.0

Date: Tuesday, January 21, 2014 Sheet 16 of 48

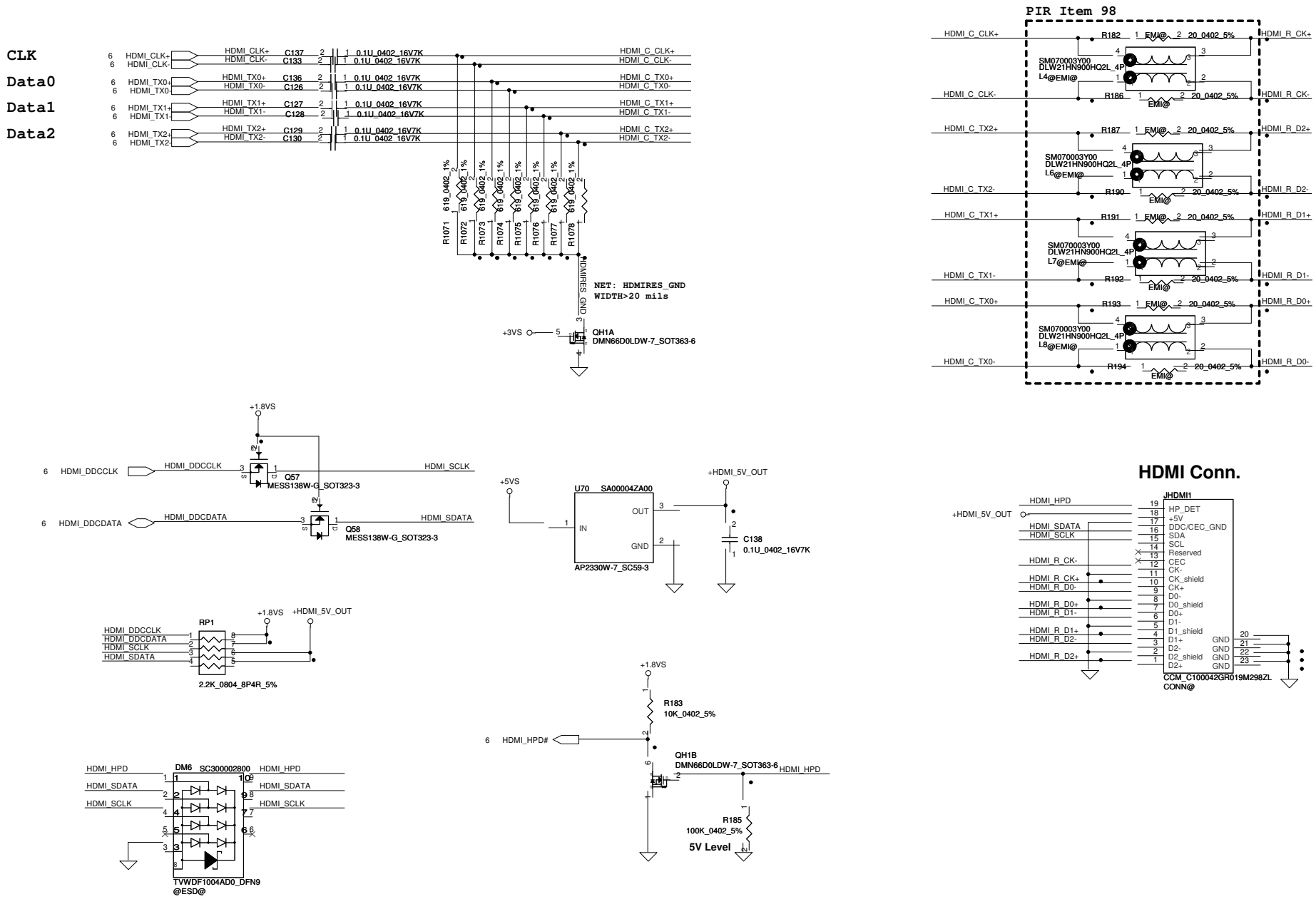


| Security Classification | Compal Secret Data | | |
|---|---|---|---|
| Issued Date | 2014/01/14 | Deciphered Date | 2015/01/14 |

THIS SHEET OF ENGINEERING DRAWING IS THE PROPRIETARY PROPERTY OF COMPAL ELECTRONICS, INC. AND CONTAINS CONFIDENTIAL AND TRADE SECRET INFORMATION. THIS SHEET MAY NOT BE TRANSFERED FROM THE CUSTODY OF THE COMPETENT DIVISION OF R&D DEPARTMENT EXCEPT AS AUTHORIZED BY COMPAL ELECTRONICS, INC. NEITHER THIS SHEET NOR THE INFORMATION IT CONTAINS MAY BE USED BY OR DISCLOSED TO ANY THIRD PARTY WITHOUT PRIOR WRITTEN CONSENT OF COMPAL ELECTRONICS, INC.

Compal Electronics, Inc.

Title: HDMI Conn/Level shifter

Size: Custom | Document Number: LA-B151P | Rev: 1.0

Date: Tuesday, January 21, 2014 | Sheet 17 of 48

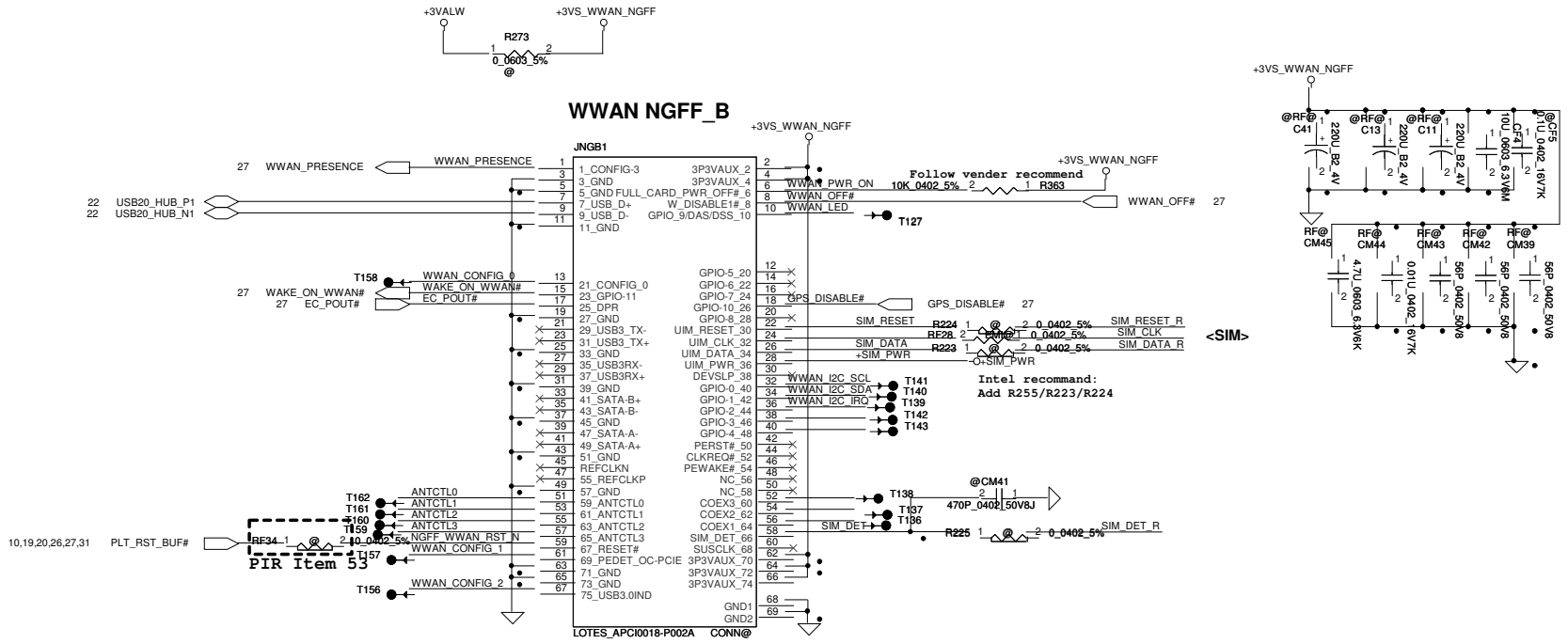


| WWAN_PWREN_EC | WWAN_OFF#/GPS_DISABLE# |
|---|---|
| H: WWAN powers on.<br>L: WWAN powers off. | H: WWAN function enabled by software<br>L: WWAN function turned off by software |
| POUT | SIM_DET |
| H: No TX power backoff<br>L: TX power backoff. | H: SIM is present<br>L: SIM is absent |

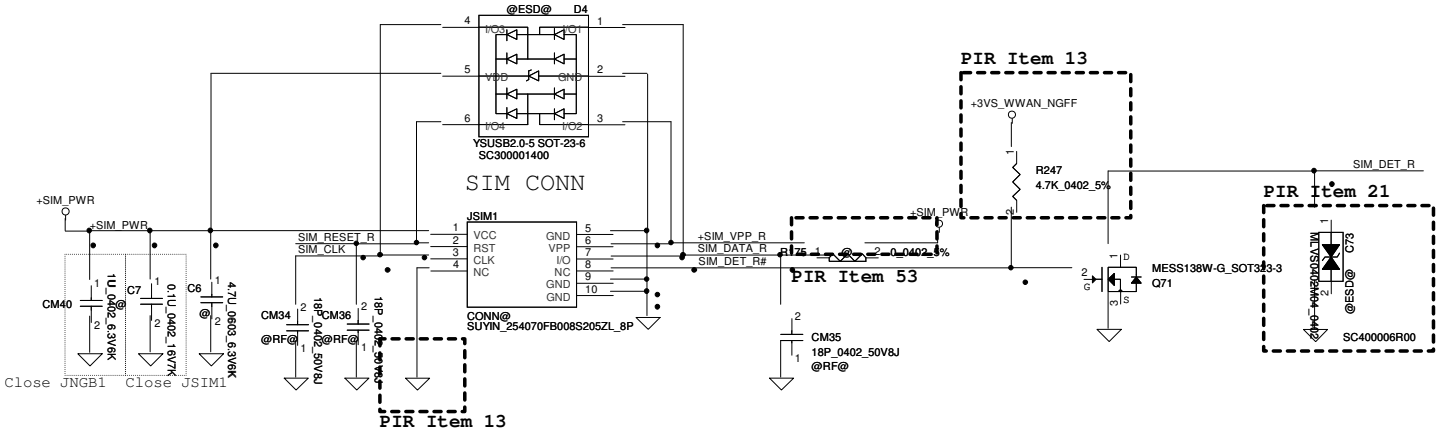


| Security Classification | Compal Secret Data | | |
|---|---|---|---|
| Issued Date | 2014/01/14 | Deciphered Date | 2015/01/14 |

THIS SHEET OF ENGINEERING DRAWING IS THE PROPRIETARY PROPERTY OF COMPAL ELECTRONICS, INC. AND CONTAINS CONFIDENTIAL AND TRADE SECRET INFORMATION. THIS SHEET MAY NOT BE TRANSFERED FROM THE CUSTODY OF THE COMPETENT DIVISION OF R&D DEPARTMENT EXCEPT AS AUTHORIZED BY COMPAL ELECTRONICS, INC. NEITHER THIS SHEET NOR THE INFORMATION IT CONTAINS MAY BE USED BY OR DISCLOSED TO ANY THIRD PARTY WITHOUT PRIOR WRITTEN CONSENT OF COMPAL ELECTRONICS, INC.

Compal Electronics, Inc.

Title: NGFF-WWAN

Size: Custom | Document Number: LA-B151P | Rev: 1.0

Date: Tuesday, January 21, 2014 | Sheet 18 of 48

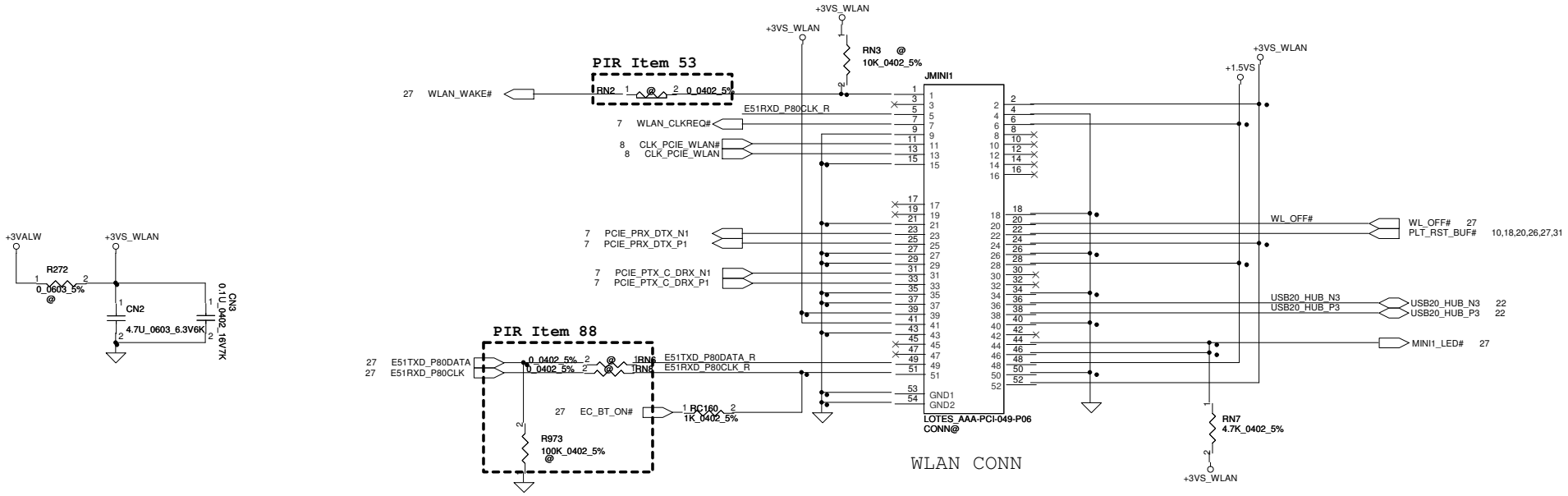


| Security Classification | Compal Secret Data | | |
|---|---|---|---|
| Issued Date | 2014/01/14 | Deciphered Date | 2015/01/14 |

THIS SHEET OF ENGINEERING DRAWING IS THE PROPRIETARY PROPERTY OF COMPAL ELECTRONICS, INC. AND CONTAINS CONFIDENTIAL AND TRADE SECRET INFORMATION. THIS SHEET MAY NOT BE TRANSFERED FROM THE CUSTODY OF THE COMPETENT DIVISION OF R&D DEPARTMENT EXCEPT AS AUTHORIZED BY COMPAL ELECTRONICS, INC. NEITHER THIS SHEET NOR THE INFORMATION IT CONTAINS MAY BE USED BY OR DISCLOSED TO ANY THIRD PARTY WITHOUT PRIOR WRITTEN CONSENT OF COMPAL ELECTRONICS, INC.

**Compal Electronics, Inc.**

Title: **WLAN/BT**

Size: C | Document Number: LA-B151P | Rev: 1.0

Date: Tuesday, January 21, 2014 | Sheet 19 of 48

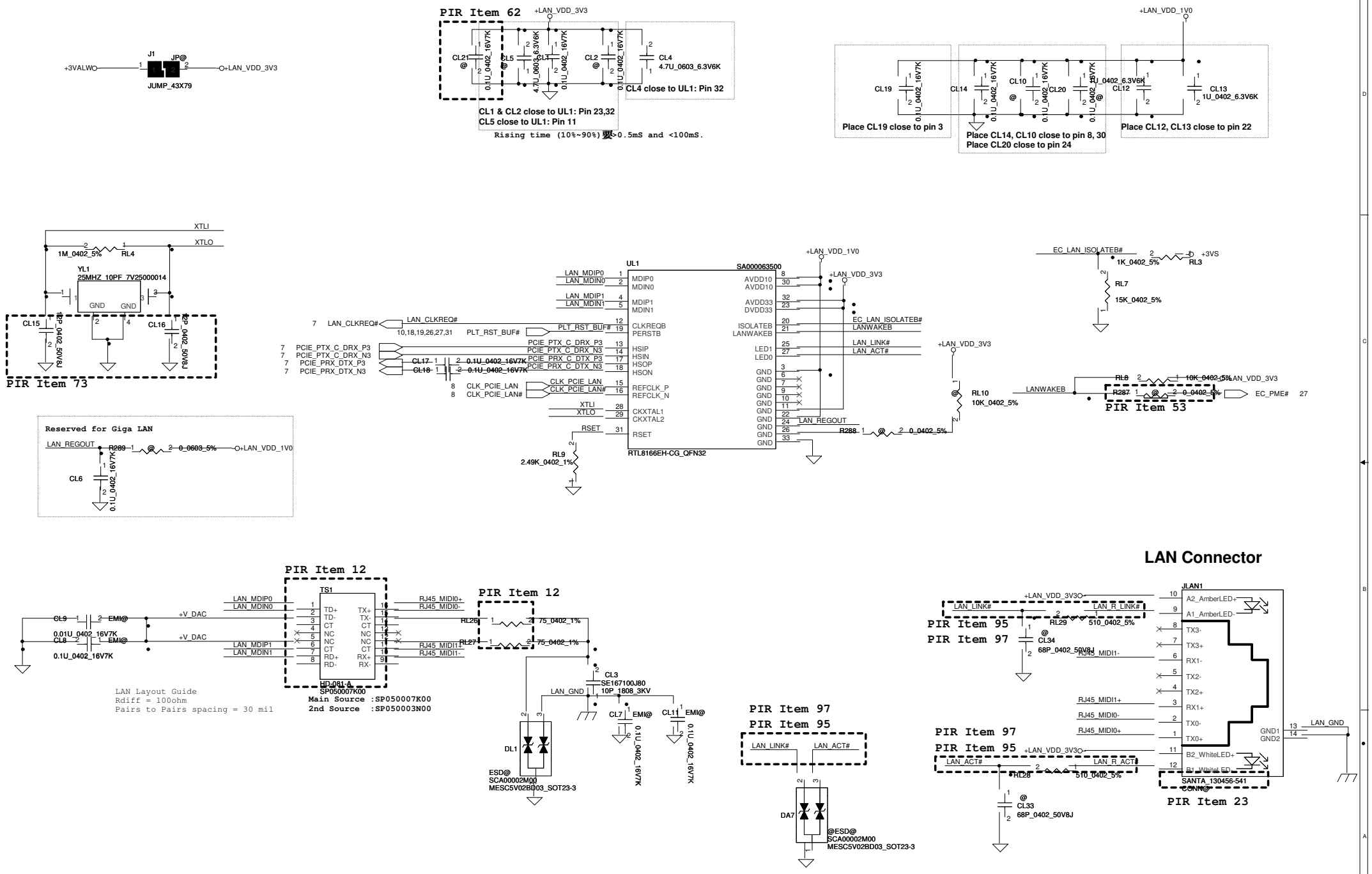


| Security Classification | Compal Secret Data | | |
|---|---|---|---|
| Issued Date | 2014/01/14 | Deciphered Date | 2015/01/14 |

THIS SHEET OF ENGINEERING DRAWING IS THE PROPRIETARY PROPERTY OF COMPAL ELECTRONICS, INC. AND CONTAINS CONFIDENTIAL AND TRADE SECRET INFORMATION. THIS SHEET MAY NOT BE TRANSFERED FROM THE CUSTODY OF THE COMPETENT DIVISION OF R&D DEPARTMENT EXCEPT AS AUTHORIZED BY COMPAL ELECTRONICS, INC. NEITHER THIS SHEET NOR THE INFORMATION IT CONTAINS MAY BE USED BY OR DISCLOSED TO ANY THIRD PARTY WITHOUT PRIOR WRITTEN CONSENT OF COMPAL ELECTRONICS, INC.

**Compal Electronics, Inc.**

Title: LAN(RTL8166EH-CG)

Size: A | Document Number: LA-B151P | Rev: 1.0

Date: Tuesday, January 21, 2014 | Sheet 20 of 48

## 2.5" SATA HDD connector

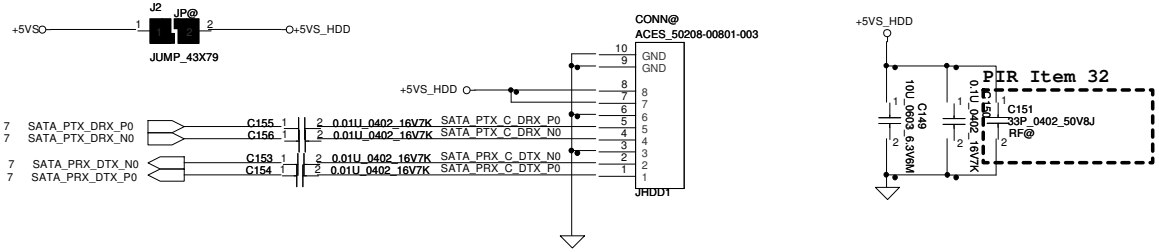





## ACCELEROMETER for HDD Protect

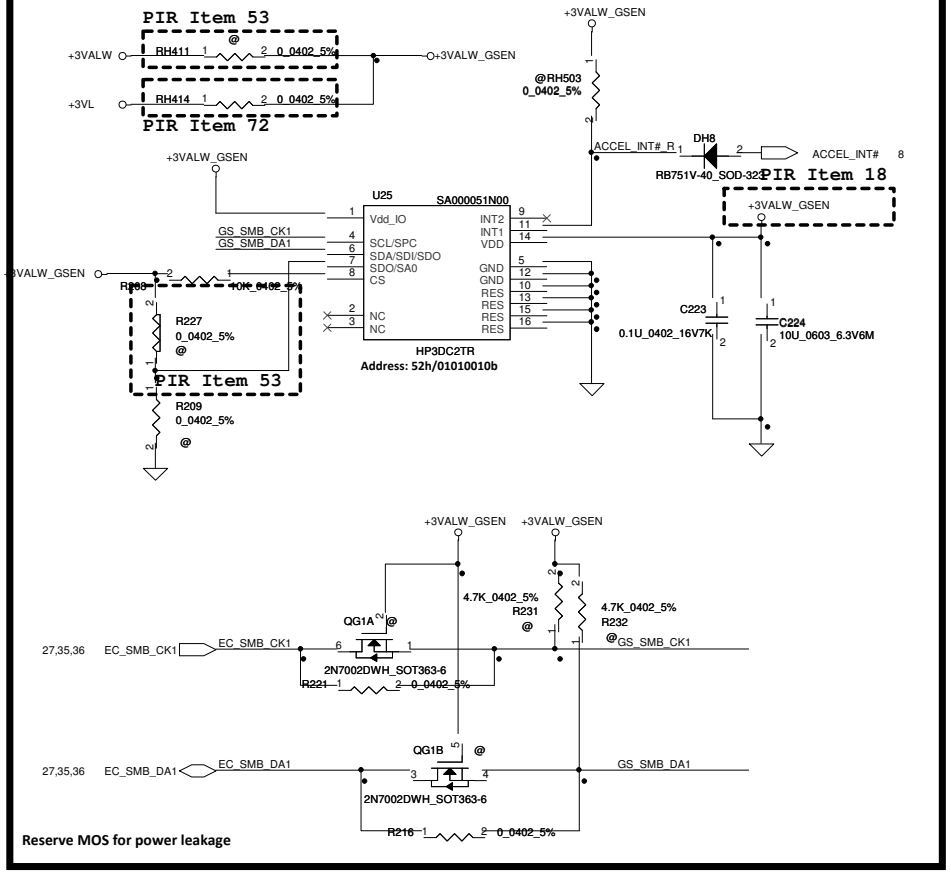


## ACCELEROMETER for Mode detect

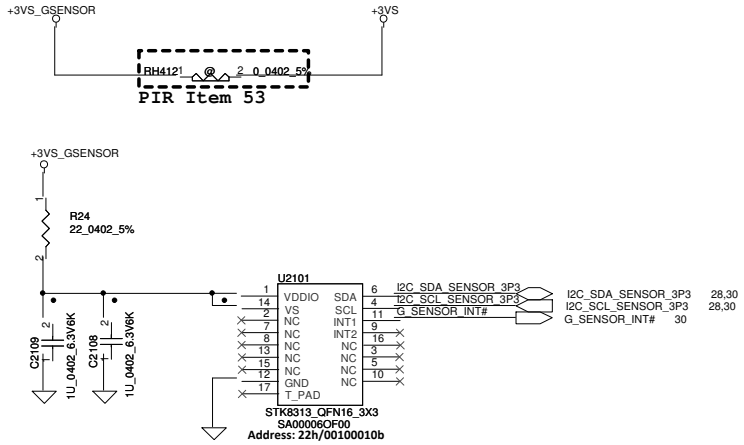


| Security Classification | Compal Secret Data | | | Compal Electronics, Inc. |
|---|---|---|---|---|
| Issued Date | 2014/01/14 | Deciphered Date | 2015/01/14 | Title: P23-SATA Connector/G-Sensor |
| | | | | Size: Custom; Document Number: LA-B151P; Rev: 1.0 |
| | | | | Date: Tuesday, January 21, 2014; Sheet 21 of 48 |

THIS SHEET OF ENGINEERING DRAWING IS THE PROPRIETARY PROPERTY OF COMPAL ELECTRONICS, INC. AND CONTAINS CONFIDENTIAL AND TRADE SECRET INFORMATION. THIS SHEET MAY NOT BE TRANSFERED FROM THE CUSTODY OF THE COMPETENT DIVISION OF R&D DEPARTMENT EXCEPT AS AUTHORIZED BY COMPAL ELECTRONICS, INC. NEITHER THIS SHEET NOR THE INFORMATION IT CONTAINS MAY BE USED BY OR DISCLOSED TO ANY THIRD PARTY WITHOUT PRIOR WRITTEN CONSENT OF COMPAL ELECTRONICS, INC.

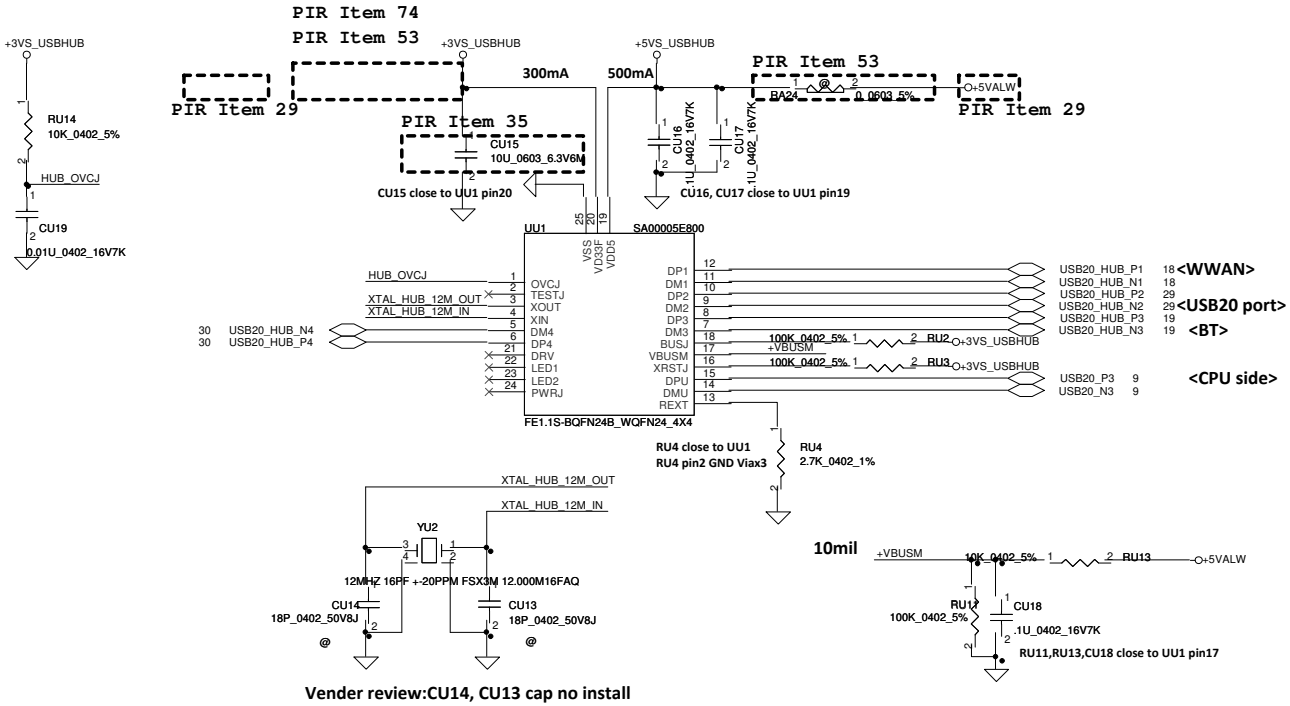


**Vender review:CU14, CU13 cap no install**

| Security Classification | Compal Secret Data | | | Compal Electronics, Inc. |
|---|---|---|---|---|
| Issued Date | 2014/01/14 | Deciphered Date | 2015/01/14 | Title: USB2.0 Hub-4-Ports(FE1.1) |
| THIS SHEET OF ENGINEERING DRAWING IS THE PROPRIETARY PROPERTY OF COMPAL ELECTRONICS, INC. AND CONTAINS CONFIDENTIAL AND TRADE SECRET INFORMATION. THIS SHEET MAY NOT BE TRANSFERED FROM THE CUSTODY OF THE COMPETENT DIVISION OF R&D DEPARTMENT EXCEPT AS AUTHORIZED BY COMPAL ELECTRONICS, INC. NEITHER THIS SHEET NOR THE INFORMATION IT CONTAINS MAY BE USED BY OR DISCLOSED TO ANY THIRD PARTY WITHOUT PRIOR WRITTEN CONSENT OF COMPAL ELECTRONICS, INC. | | | | Size: Custom; Document Number: LA-B151P; Rev: 1.0 |
| | | | | Date: Tuesday, January 21, 2014; Sheet 22 of 48 |

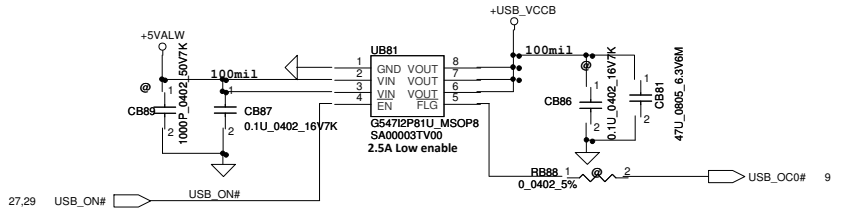


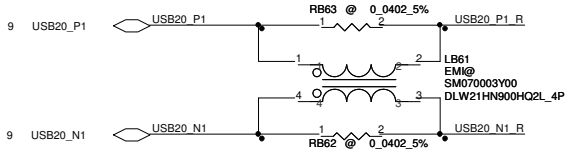


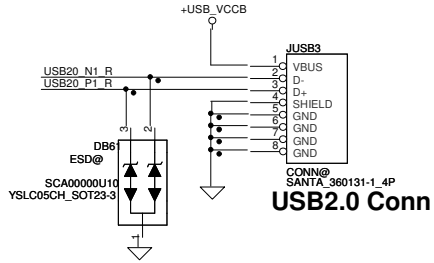


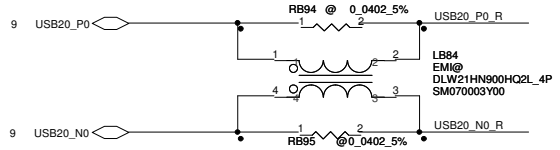


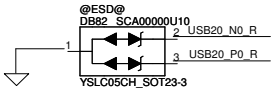


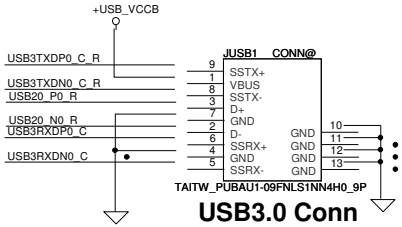


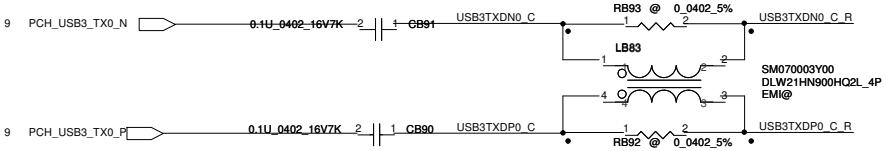


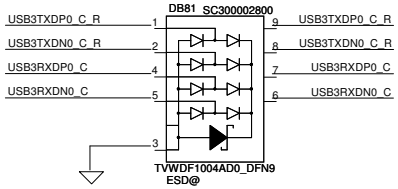


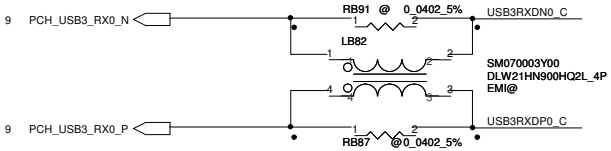


| Security Classification | Compal Secret Data | | |
|---|---|---|---|
| Issued Date | 2014/01/14 | Deciphered Date | 2015/01/14 |

THIS SHEET OF ENGINEERING DRAWING IS THE PROPRIETARY PROPERTY OF COMPAL ELECTRONICS, INC. AND CONTAINS CONFIDENTIAL AND TRADE SECRET INFORMATION. THIS SHEET MAY NOT BE TRANSFERED FROM THE CUSTODY OF THE COMPETENT DIVISION OF R&D DEPARTMENT EXCEPT AS AUTHORIZED BY COMPAL ELECTRONICS, INC. NEITHER THIS SHEET NOR THE INFORMATION IT CONTAINS MAY BE USED BY OR DISCLOSED TO ANY THIRD PARTY WITHOUT PRIOR WRITTEN CONSENT OF COMPAL ELECTRONICS, INC.

**Compal Electronics, Inc.**

Title: USB3/USB2 Port

Size: Custom | Document Number: LA-B151P | Rev: 1.0

Date: Tuesday, January 21, 2014 | Sheet 23 of 48

PIR Item 16: Change Audio Codec to ALC3227
PIR Item 41: Modify circuit for baets

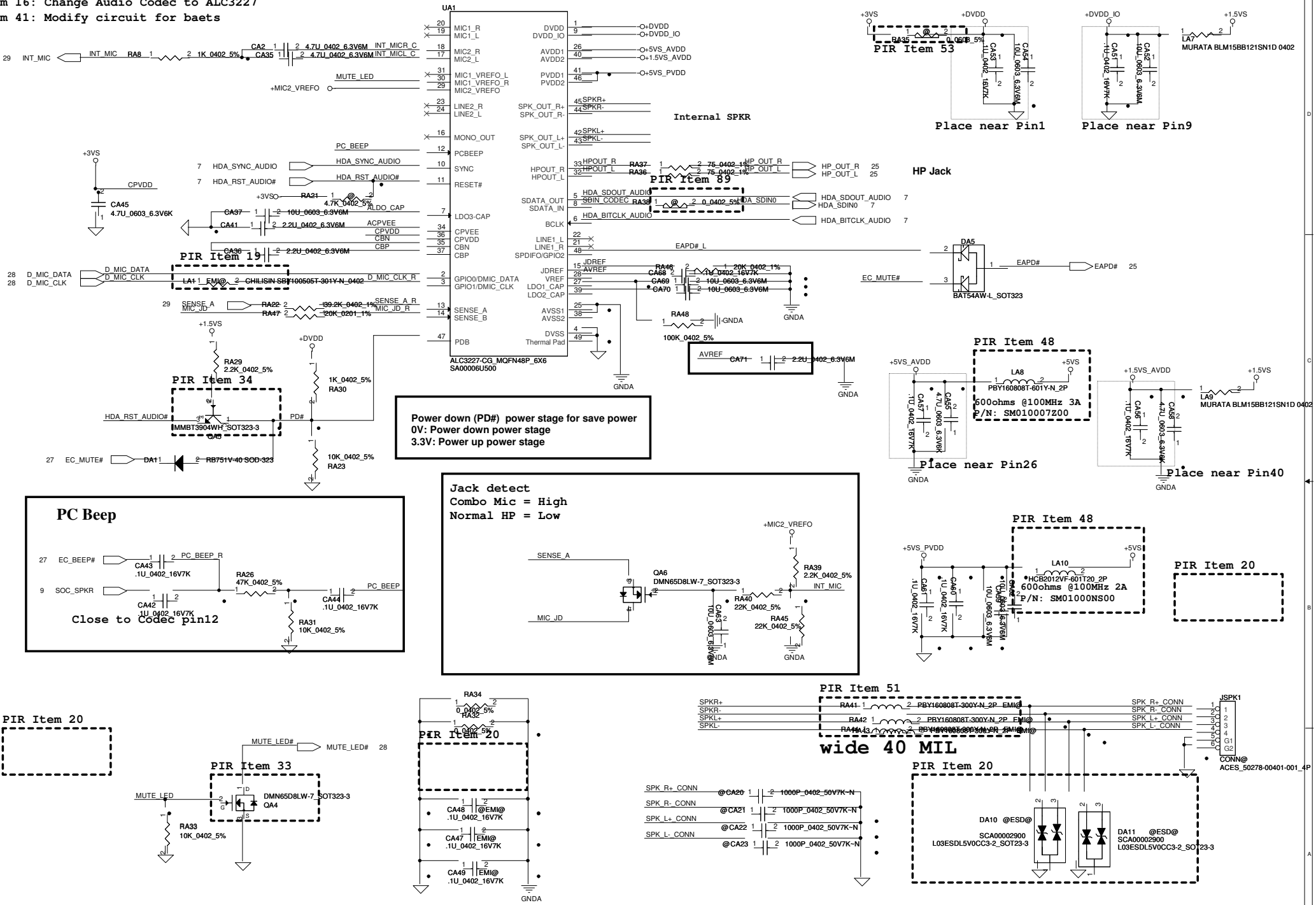


| Security Classification | Compal Secret Data | | |
|---|---|---|---|
| Issued Date | 2014/01/14 | Deciphered Date | 2015/01/14 |

**Compal Electronics, Inc.**

Title: Audio ALC3227-CG

Size: Custom | Document Number: LA-B151P | Rev: 1.0

Date: Tuesday, January 21, 2014 | Sheet 24 of 48

THIS SHEET OF ENGINEERING DRAWING IS THE PROPRIETARY PROPERTY OF COMPAL ELECTRONICS, INC. AND CONTAINS CONFIDENTIAL AND TRADE SECRET INFORMATION. THIS SHEET MAY NOT BE TRANSFERED FROM THE CUSTODY OF THE COMPETENT DIVISION OF R&D DEPARTMENT EXCEPT AS AUTHORIZED BY COMPAL ELECTRONICS, INC. NEITHER THIS SHEET NOR THE INFORMATION IT CONTAINS MAY BE USED BY OR DISCLOSED TO ANY THIRD PARTY WITHOUT PRIOR WRITTEN CONSENT OF COMPAL ELECTRONICS, INC.

PIR Item 41: Modify circuit for baets

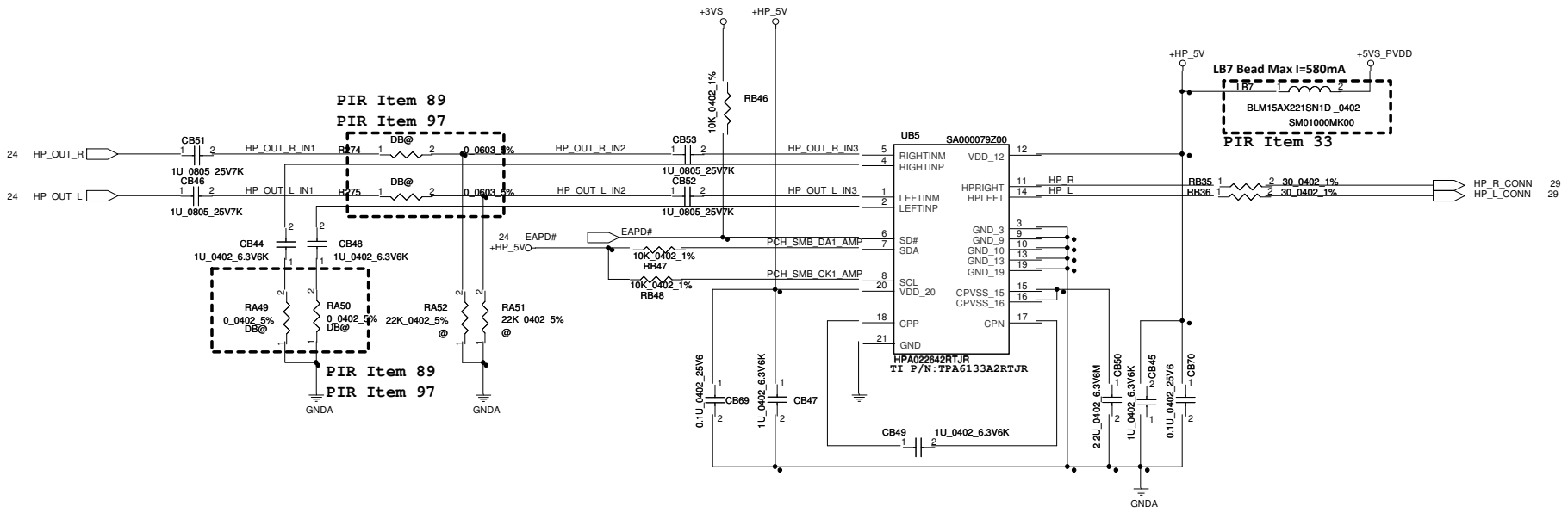


| Security Classification | Compal Secret Data | | | Compal Electronics, Inc. |
|---|---|---|---|---|
| Issued Date | 2014/01/14 | Deciphered Date | 2015/01/14 | Title: Audio HP Amp |
| THIS SHEET OF ENGINEERING DRAWING IS THE PROPRIETARY PROPERTY OF COMPAL ELECTRONICS, INC. AND CONTAINS CONFIDENTIAL AND TRADE SECRET INFORMATION. THIS SHEET MAY NOT BE TRANSFERED FROM THE CUSTODY OF THE COMPETENT DIVISION OF R&D DEPARTMENT EXCEPT AS AUTHORIZED BY COMPAL ELECTRONICS, INC. NEITHER THIS SHEET NOR THE INFORMATION IT CONTAINS MAY BE USED BY OR DISCLOSED TO ANY THIRD PARTY WITHOUT PRIOR WRITTEN CONSENT OF COMPAL ELECTRONICS, INC. | | | | Size: Custom; Document Number: LA-B151P; Rev: 1.0 |
| | | | | Date: Tuesday, January 21, 2014; Sheet 25 of 48 |

# Card Reader Connector

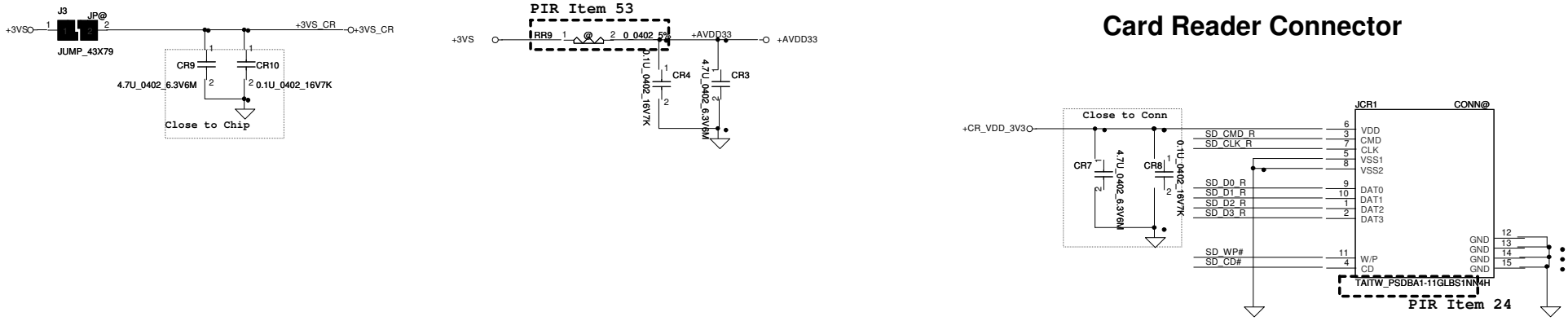


- Complete D3V3 power plane partition under RTS5227 chip and Socket in Power Layer
- Pin 11(3V3_IN) / pin 12 (CARD_3V3) trace width is 40 mils (minimum).
- Pin 27(3V3aux) trace width is 30 mils (minimum).
- Pin 10(AV12), pin 14(DV12S), pin 18 (DV33_18) trace width is 20 mils (minimum).
- Pin 9 (RREF) trace width is 12 mils (minimum).

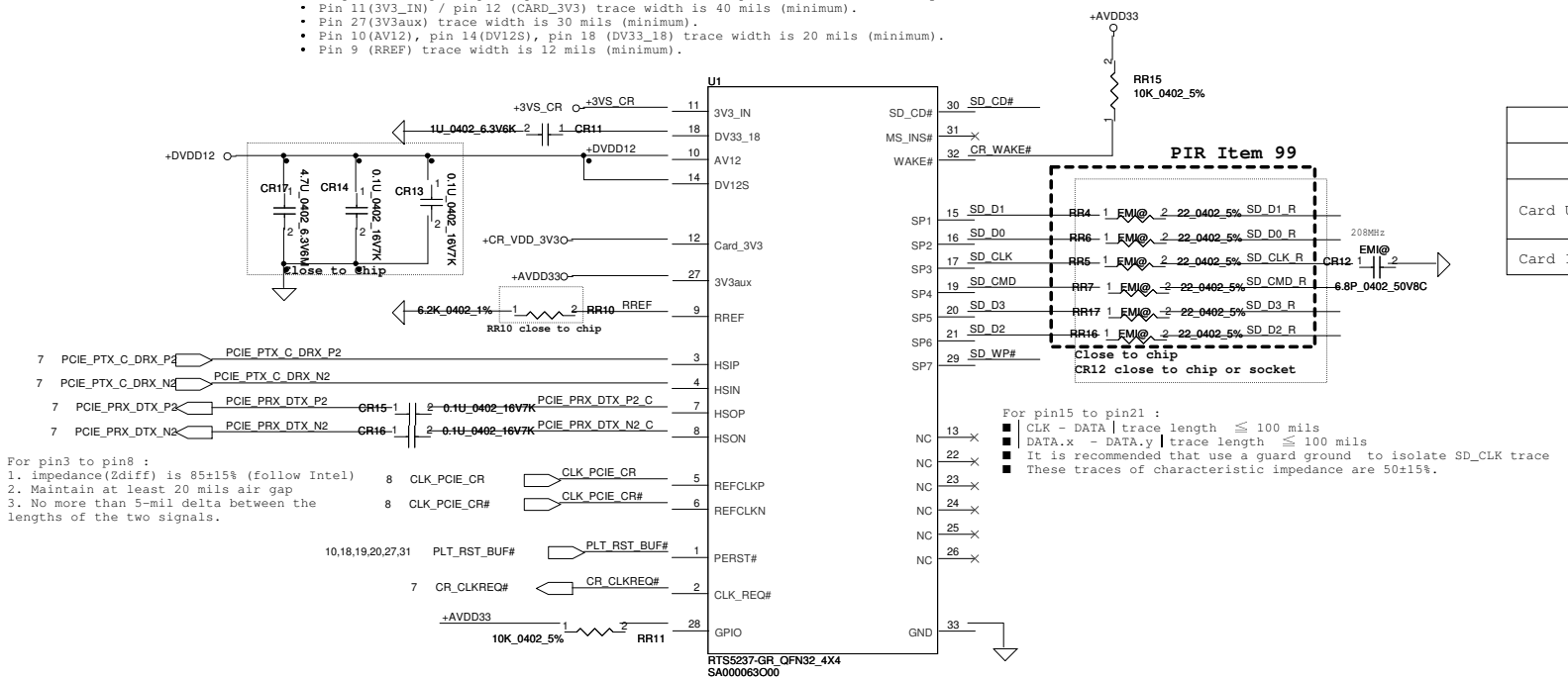


For pin3 to pin8 :
1. impedance(Zdiff) is 85±15% (follow Intel)
2. Maintain at least 20 mils air gap
3. No more than 5-mil delta between the lengths of the two signals.

For pin15 to pin21 :
- CLK - DATA trace length ≦ 100 mils
- DATA.x - DATA.y trace length ≦ 100 mils
- It is recommended that use a guard ground to isolate SD_CLK trace
- These traces of characteristic impedance are 50±15%.

| | Protect Contact | | Detect Contact |
|---|---|---|---|
| | Disable | Enable | |
| Card Uninsertion | Open | Open | Open |
| Card Insertion | Close | Open | Close |

| Security Classification | Compal Secret Data | | |
|---|---|---|---|
| Issued Date | 2014/01/14 | Deciphered Date | 2015/01/14 |

THIS SHEET OF ENGINEERING DRAWING IS THE PROPRIETARY PROPERTY OF COMPAL ELECTRONICS, INC. AND CONTAINS CONFIDENTIAL AND TRADE SECRET INFORMATION. THIS SHEET MAY NOT BE TRANSFERED FROM THE CUSTODY OF THE COMPETENT DIVISION OF R&D DEPARTMENT EXCEPT AS AUTHORIZED BY COMPAL ELECTRONICS, INC. NEITHER THIS SHEET NOR THE INFORMATION IT CONTAINS MAY BE USED BY OR DISCLOSED TO ANY THIRD PARTY WITHOUT PRIOR WRITTEN CONSENT OF COMPAL ELECTRONICS, INC.

Compal Electronics, Inc.

Title: Card Reader-RTS5237

Size: C | Document Number: LA-B151P | Rev: 1.0

Date: Tuesday, January 21, 2014 | Sheet 26 of 48

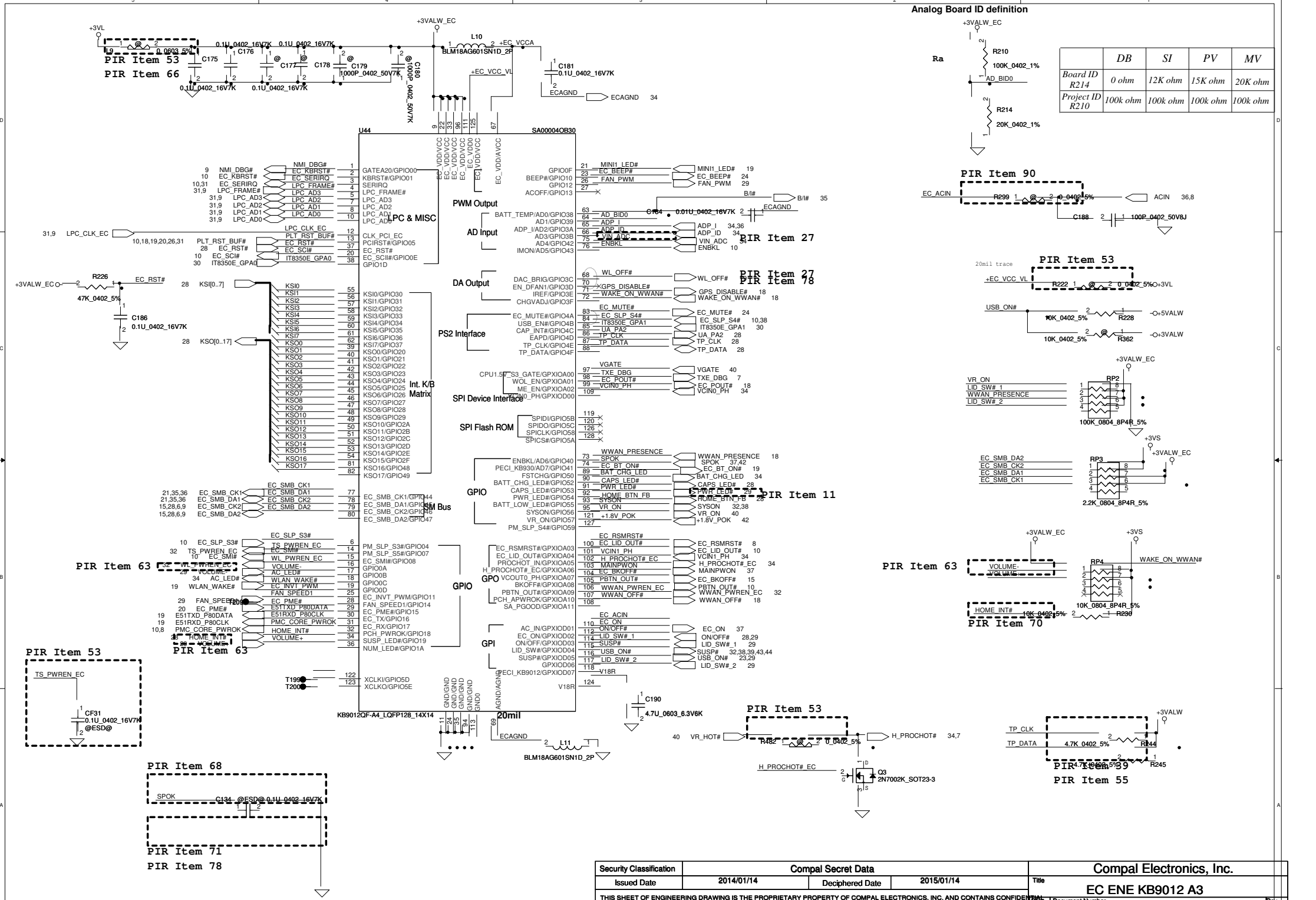


| Security Classification | Compal Secret Data | | |
|---|---|---|---|
| Issued Date | 2014/01/14 | Deciphered Date | 2015/01/14 |

THIS SHEET OF ENGINEERING DRAWING IS THE PROPRIETARY PROPERTY OF COMPAL ELECTRONICS, INC. AND CONTAINS CONFIDENTIAL AND TRADE SECRET INFORMATION. THIS SHEET MAY NOT BE TRANSFERED FROM THE CUSTODY OF THE COMPETENT DIVISION OF R&D DEPARTMENT EXCEPT AS AUTHORIZED BY COMPAL ELECTRONICS, INC. NEITHER THIS SHEET NOR THE INFORMATION IT CONTAINS MAY BE USED BY OR DISCLOSED TO ANY THIRD PARTY WITHOUT PRIOR WRITTEN CONSENT OF COMPAL ELECTRONICS, INC.

Compal Electronics, Inc.

Title: EC ENE KB9012 A3

Size: Custom | Document Number: LA-B151P | Rev: 1.0

Date: Tuesday, January 21, 2014 | Sheet 27 of 48

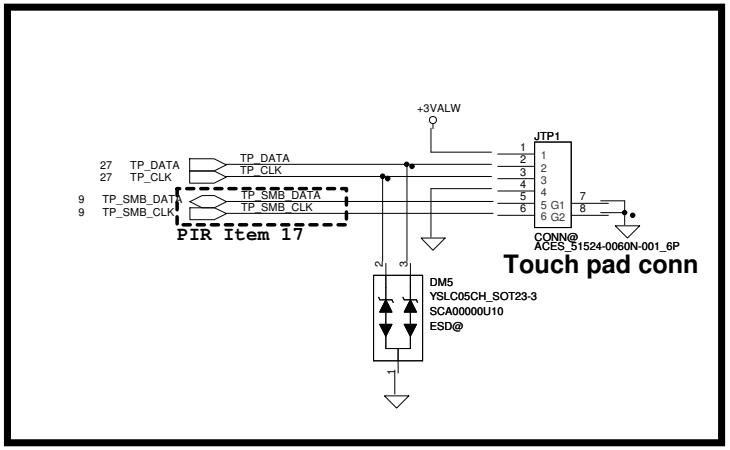


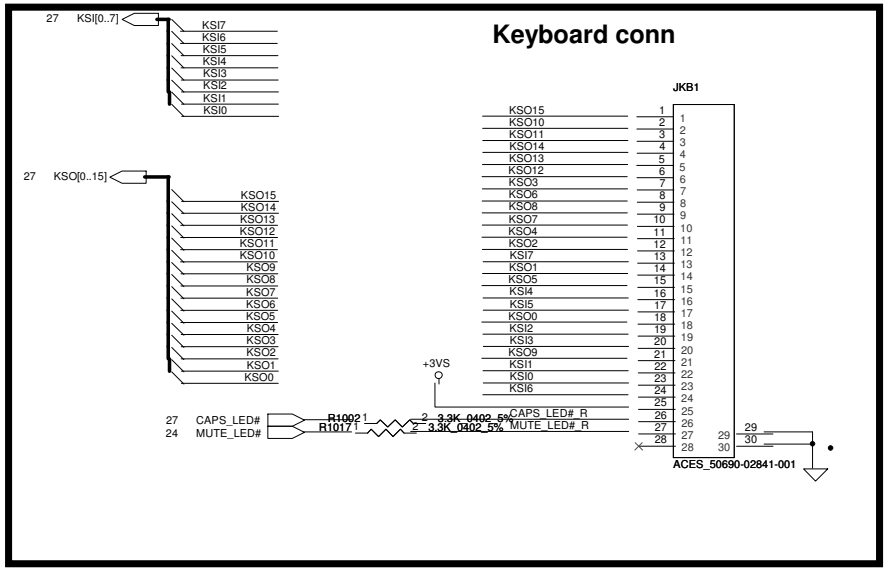


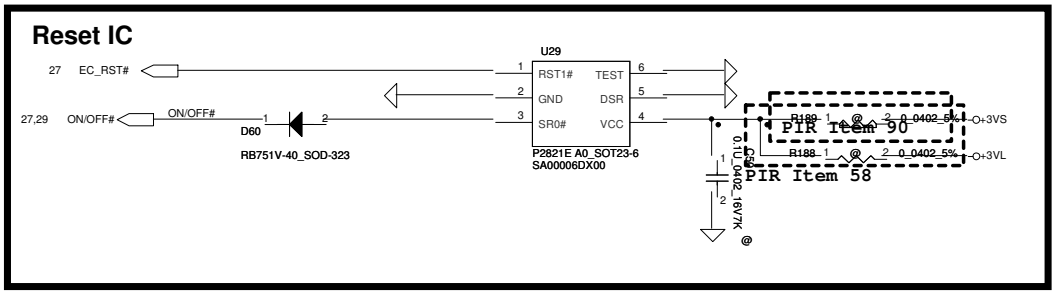


PIR Item 44
PIR Item 78

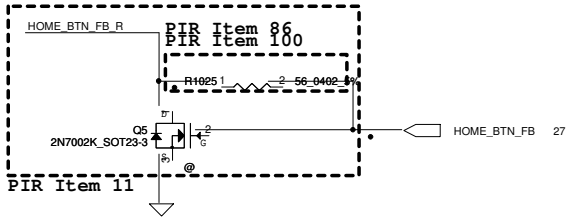


## Touch Screen

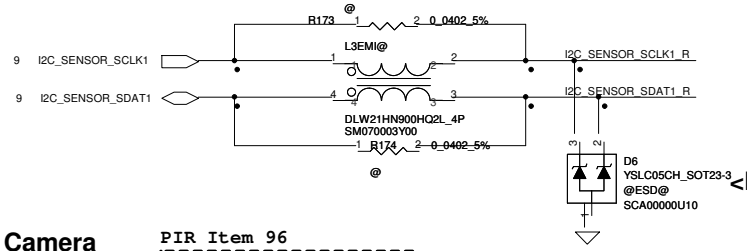


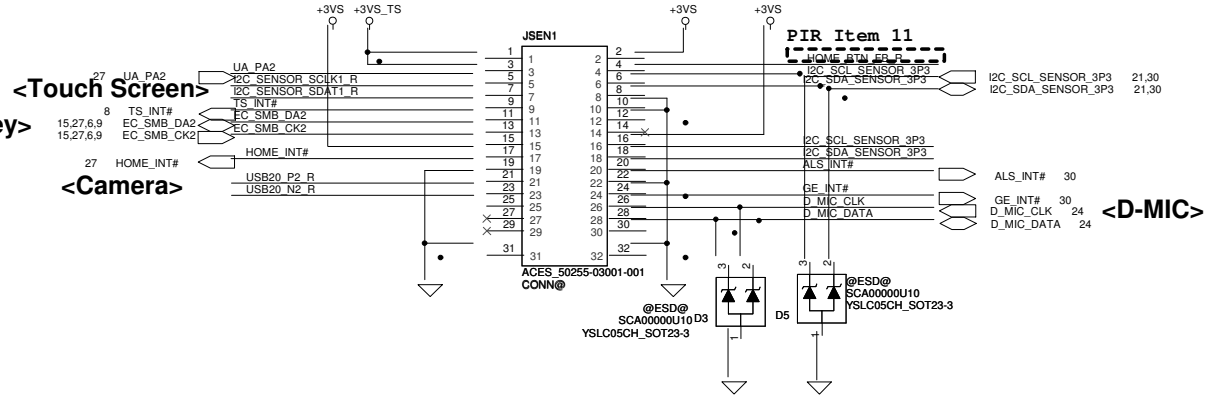


## Camera

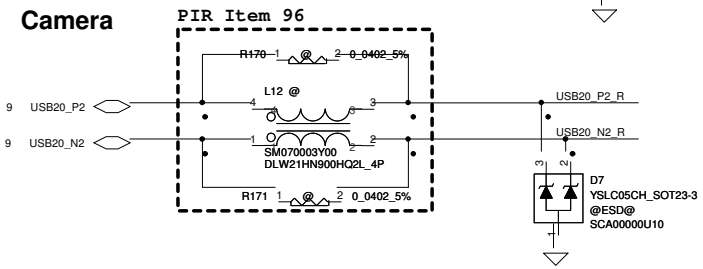


| Security Classification | Compal Secret Data | | |
|---|---|---|---|
| Issued Date | 2014/01/14 | Deciphered Date | 2015/01/14 |

THIS SHEET OF ENGINEERING DRAWING IS THE PROPRIETARY PROPERTY OF COMPAL ELECTRONICS, INC. AND CONTAINS CONFIDENTIAL AND TRADE SECRET INFORMATION. THIS SHEET MAY NOT BE TRANSFERED FROM THE CUSTODY OF THE COMPETENT DIVISION OF R&D DEPARTMENT EXCEPT AS AUTHORIZED BY COMPAL ELECTRONICS, INC. NEITHER THIS SHEET NOR THE INFORMATION IT CONTAINS MAY BE USED BY OR DISCLOSED TO ANY THIRD PARTY WITHOUT PRIOR WRITTEN CONSENT OF COMPAL ELECTRONICS, INC.

**Compal Electronics, Inc.**

Title: P30-KB/TP/Sensor-B/Camera/D-MIC

Size: Custom | Document Number: LA-B151P | Rev: 1.0

Date: Tuesday, January 21, 2014 | Sheet 28 of 48

## FAN conn

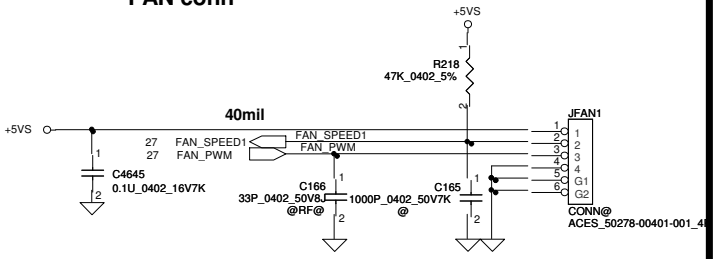


## Audio Jack/USB IO Connector

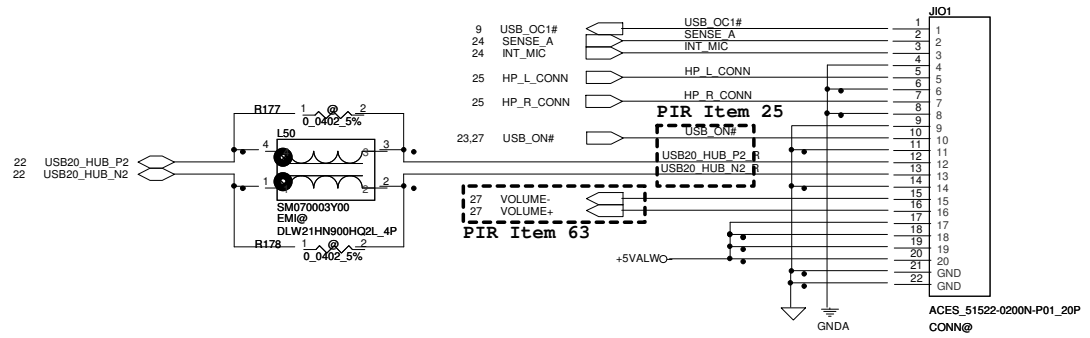


## Powert Button Conn

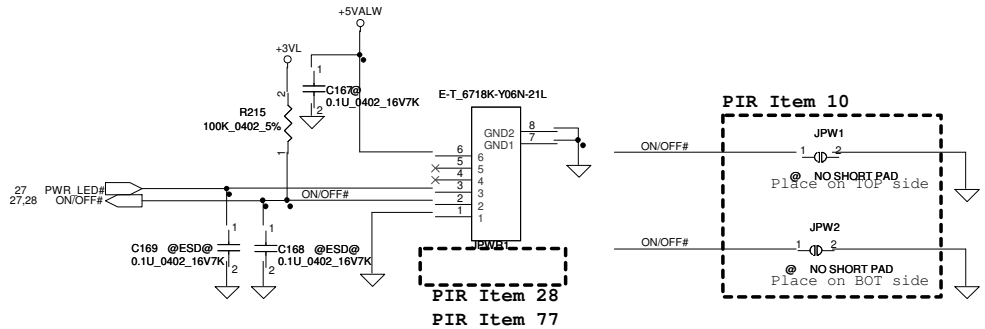


## LED

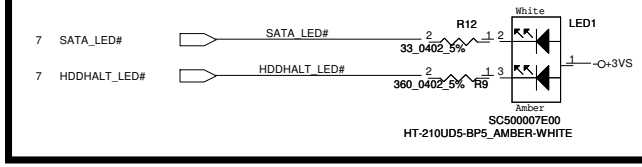


## LID Switch(BOT)

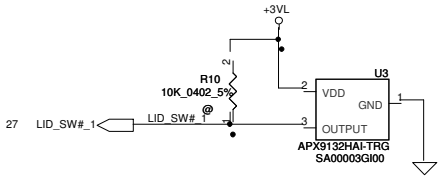


## LID Switch(TOP)

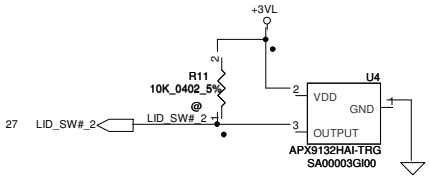

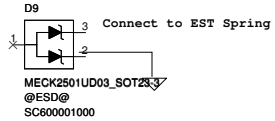


| Security Classification | Compal Secret Data | | |
|---|---|---|---|
| Issued Date | 2014/01/14 | Deciphered Date | 2015/01/14 |

THIS SHEET OF ENGINEERING DRAWING IS THE PROPRIETARY PROPERTY OF COMPAL ELECTRONICS, INC. AND CONTAINS CONFIDENTIAL AND TRADE SECRET INFORMATION. THIS SHEET MAY NOT BE TRANSFERED FROM THE CUSTODY OF THE COMPETENT DIVISION OF R&D DEPARTMENT EXCEPT AS AUTHORIZED BY COMPAL ELECTRONICS, INC. NEITHER THIS SHEET NOR THE INFORMATION IT CONTAINS MAY BE USED BY OR DISCLOSED TO ANY THIRD PARTY WITHOUT PRIOR WRITTEN CONSENT OF COMPAL ELECTRONICS, INC.

**Compal Electronics, Inc.**

Title: PWRBTN/FAN

Size: Custom | Document Number: LA-B151P | Rev: 1.0

Date: Tuesday, January 21, 2014 | Sheet 29 of 48

Note 1 : Since all GPIO belong to VSTBY power domain

Note 2 :
(1) Each input pin should be driven or pulled.
(2) Each output-drain output pin should be pulled.

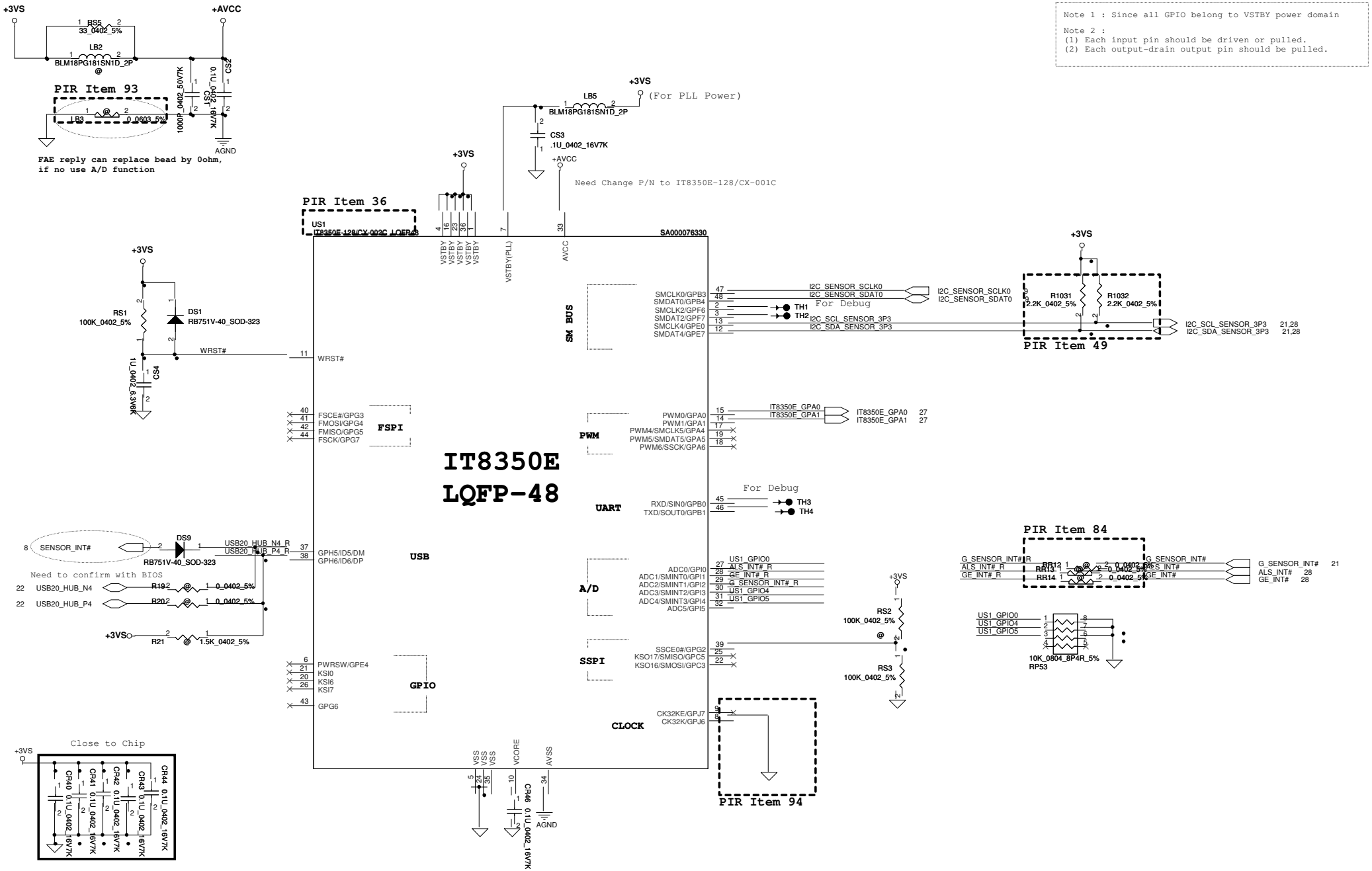


| Security Classification | Compal Secret Data | | |
|---|---|---|---|
| Issued Date | 2014/01/14 | Deciphered Date | 2015/01/14 |

THIS SHEET OF ENGINEERING DRAWING IS THE PROPRIETARY PROPERTY OF COMPAL ELECTRONICS, INC. AND CONTAINS CONFIDENTIAL AND TRADE SECRET INFORMATION. THIS SHEET MAY NOT BE TRANSFERED FROM THE CUSTODY OF THE COMPETENT DIVISION OF R&D DEPARTMENT EXCEPT AS AUTHORIZED BY COMPAL ELECTRONICS, INC. NEITHER THIS SHEET NOR THE INFORMATION IT CONTAINS MAY BE USED BY OR DISCLOSED TO ANY THIRD PARTY WITHOUT PRIOR WRITTEN CONSENT OF COMPAL ELECTRONICS, INC.

**Compal Electronics, Inc.**

Title: **Sensro Hub-IT8350E-128-BX**

Size: Custom | Document Number: **LA-B151P** | Rev: 1.0

Date: Tuesday, January 21, 2014 | Sheet 30 of 48

# TPM1.2

PIR43: Remove co-layout circuit of SLB9635TT1.2

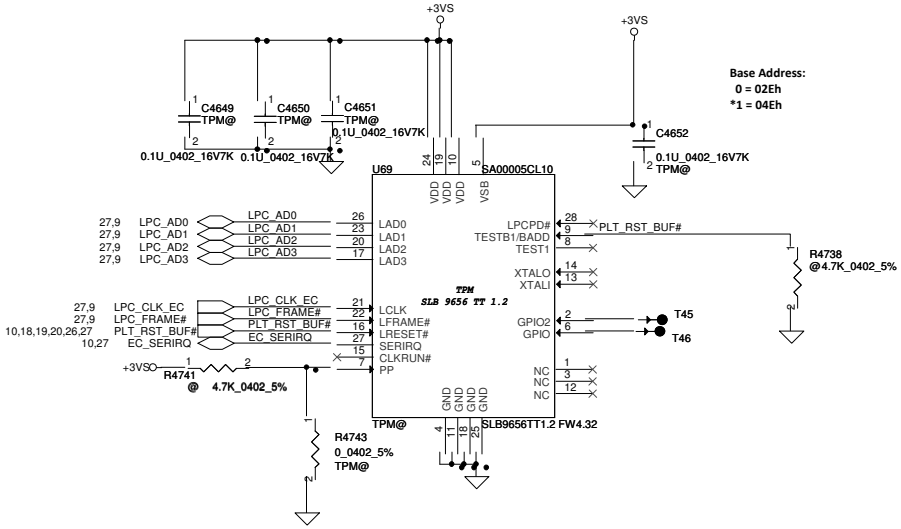


PIR Item 54

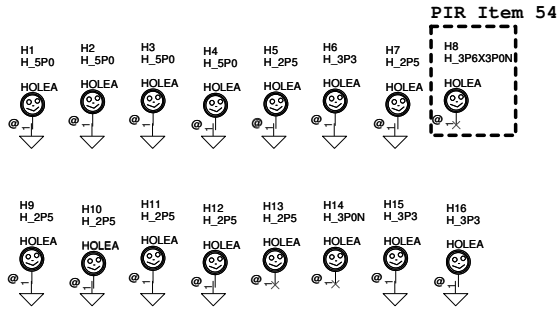


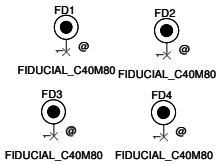


| Security Classification | Compal Secret Data | | | Compal Electronics, Inc. |
|---|---|---|---|---|
| Issued Date | 2014/01/14 | Deciphered Date | 2015/01/14 | Title: TPM/Screw hole |
| | | | | Size: Document Number: LA-B151P Rev: 1.0 |
| | | | | Date: Tuesday, January 21, 2014 Sheet 31 of 48 |

THIS SHEET OF ENGINEERING DRAWING IS THE PROPRIETARY PROPERTY OF COMPAL ELECTRONICS, INC. AND CONTAINS CONFIDENTIAL AND TRADE SECRET INFORMATION. THIS SHEET MAY NOT BE TRANSFERED FROM THE CUSTODY OF THE COMPETENT DIVISION OF R&D DEPARTMENT EXCEPT AS AUTHORIZED BY COMPAL ELECTRONICS, INC. NEITHER THIS SHEET NOR THE INFORMATION IT CONTAINS MAY BE USED BY OR DISCLOSED TO ANY THIRD PARTY WITHOUT PRIOR WRITTEN CONSENT OF COMPAL ELECTRONICS, INC.

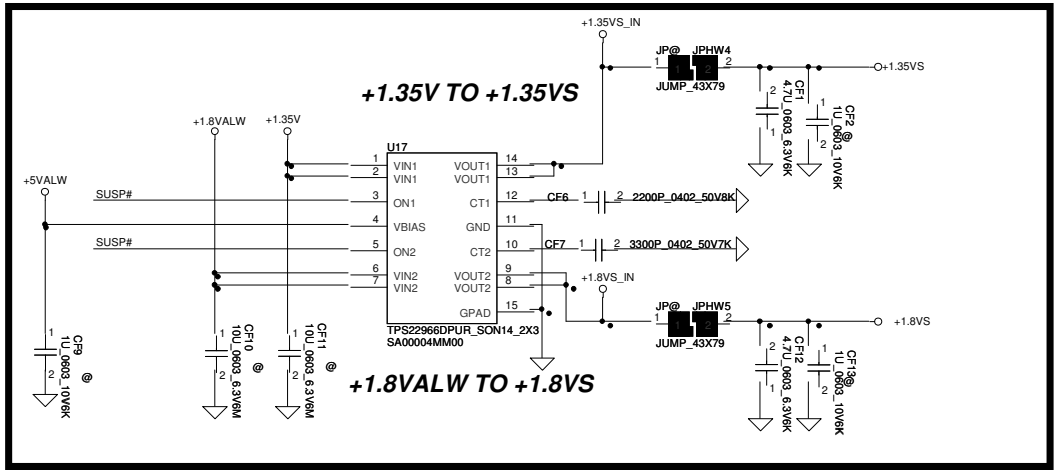


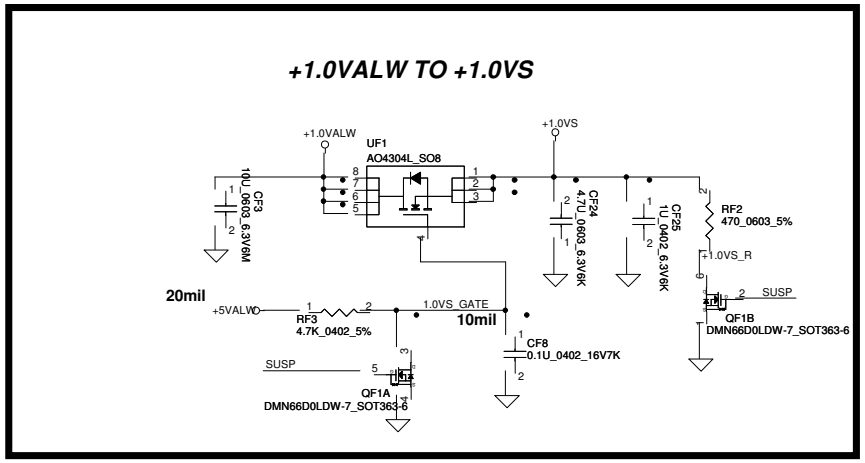


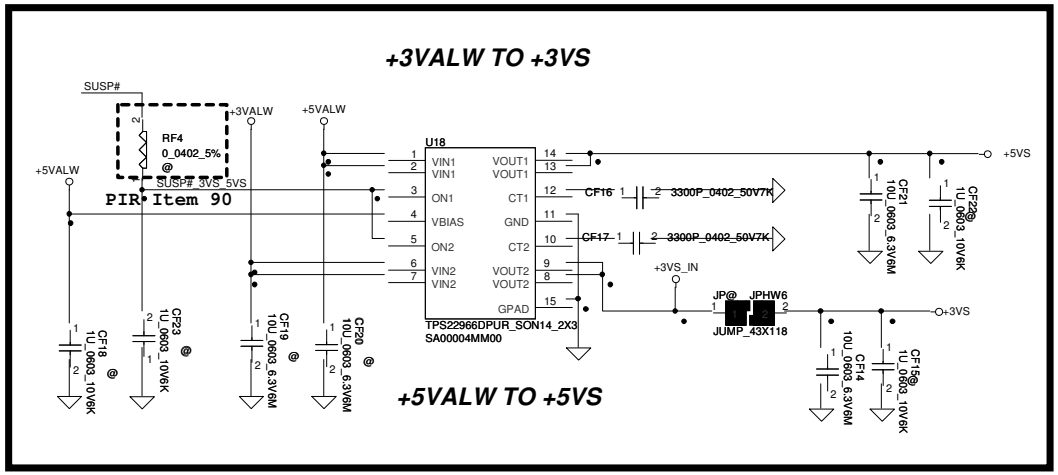


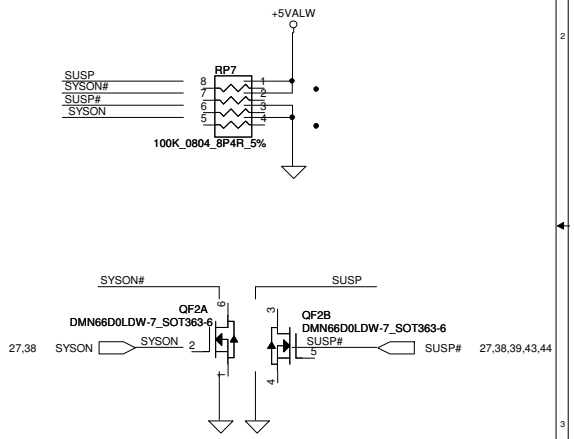


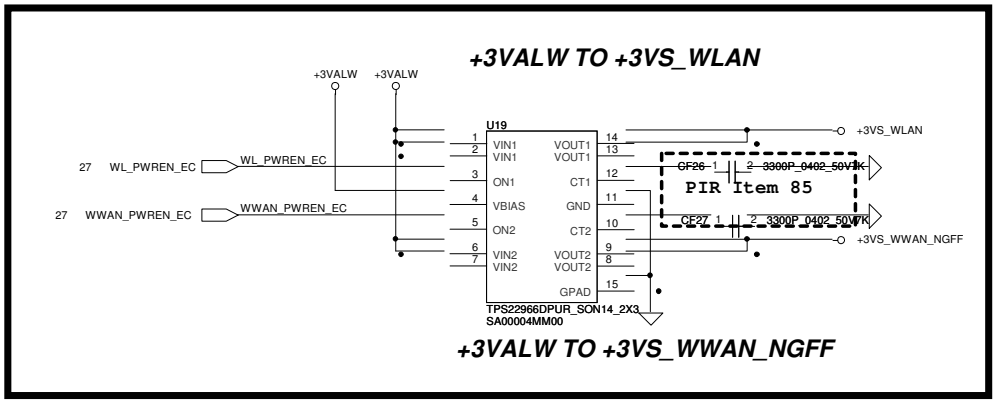


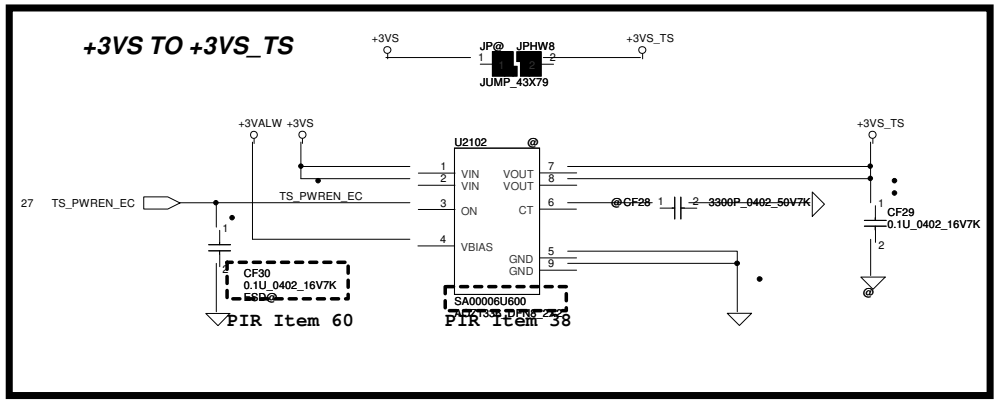


| Security Classification | Compal Secret Data | | | Compal Electronics, Inc. |
|---|---|---|---|---|
| Issued Date | 2014/01/14 | Deciphered Date | 2015/01/14 | Title: DC Interface |
| THIS SHEET OF ENGINEERING DRAWING IS THE PROPRIETARY PROPERTY OF COMPAL ELECTRONICS, INC. AND CONTAINS CONFIDENTIAL AND TRADE SECRET INFORMATION. THIS SHEET MAY NOT BE TRANSFERED FROM THE CUSTODY OF THE COMPETENT DIVISION OF R&D DEPARTMENT EXCEPT AS AUTHORIZED BY COMPAL ELECTRONICS, INC. NEITHER THIS SHEET NOR THE INFORMATION IT CONTAINS MAY BE USED BY OR DISCLOSED TO ANY THIRD PARTY WITHOUT PRIOR WRITTEN CONSENT OF COMPAL ELECTRONICS, INC. | | | | Size: Custom / Document Number: LA-B151P / Rev: 1.0 |
| | | | | Date: Tuesday, January 21, 2014 / Sheet 32 of 48 |

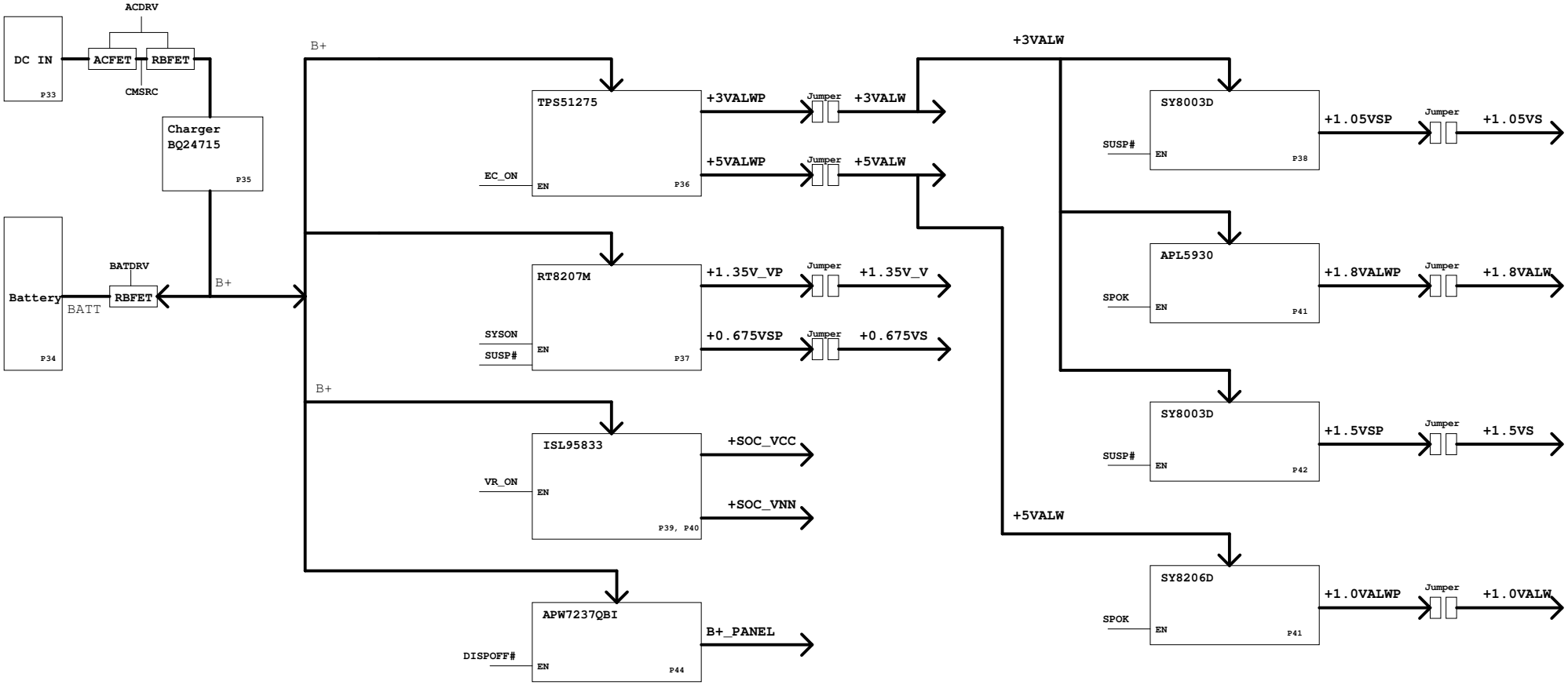


| Security Classification | Compal Secret Data | | |
|---|---|---|---|
| Issued Date | 2014/01/14 | Deciphered Date | 2015/01/14 |

THIS SHEET OF ENGINEERING DRAWING IS THE PROPRIETARY PROPERTY OF COMPAL ELECTRONICS, INC. AND CONTAINS CONFIDENTIAL AND TRADE SECRET INFORMATION. THIS SHEET MAY NOT BE TRANSFERED FROM THE CUSTODY OF THE COMPETENT DIVISION OF R&D DEPARTMENT EXCEPT AS AUTHORIZED BY COMPAL ELECTRONICS, INC. NEITHER THIS SHEET NOR THE INFORMATION IT CONTAINS MAY BE USED BY OR DISCLOSED TO ANY THIRD PARTY WITHOUT PRIOR WRITTEN CONSENT OF COMPAL ELECTRONICS, INC.

**Compal Electronics, Inc.**

Title: ***Power Block Diagram***

Size | Document Number: **LAB151P** | Rev: 1.0

Date: Tuesday, January 21, 2014 | Sheet 33 of 48

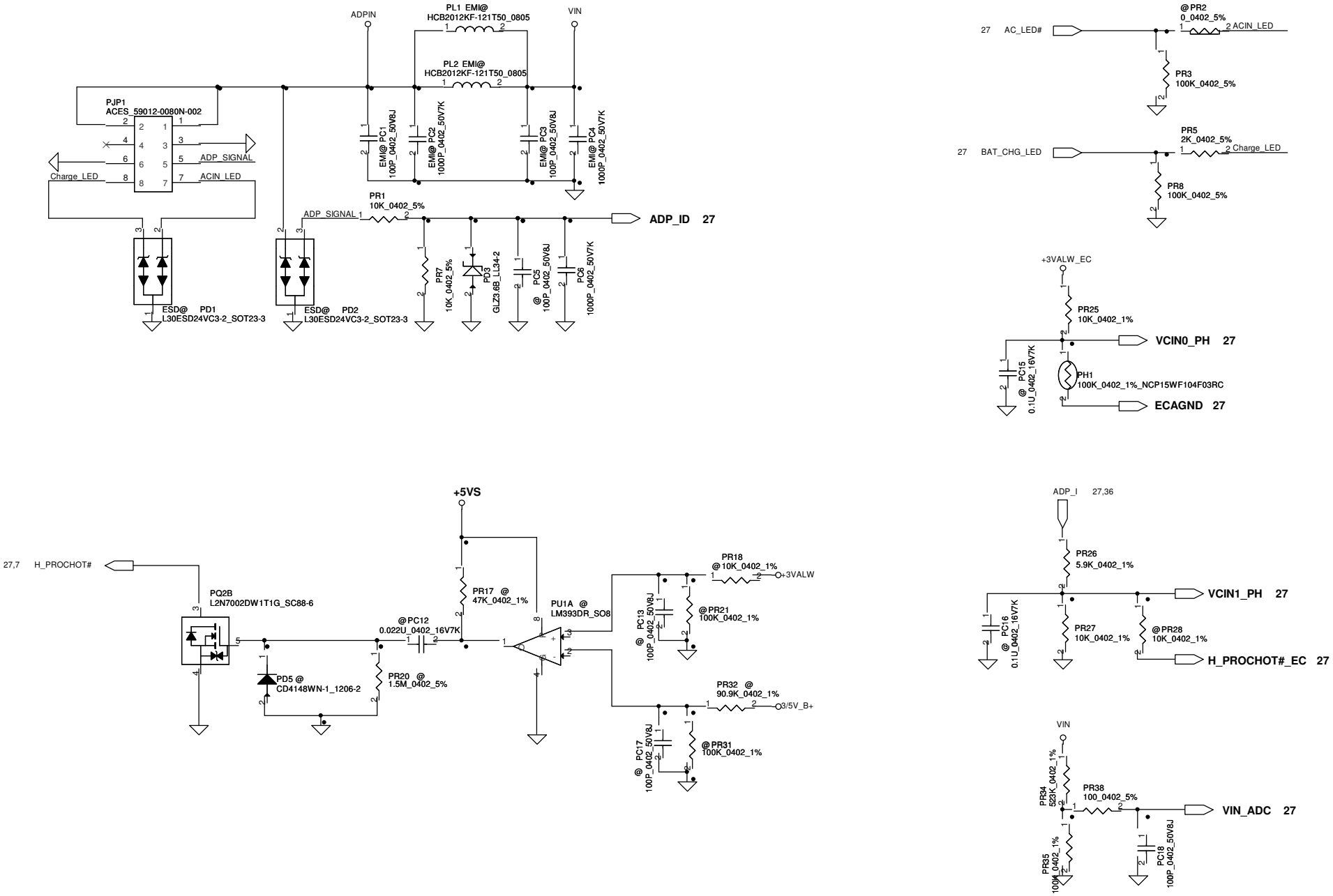


| Security Classification | Compal Secret Data | | |
|---|---|---|---|
| Issued Date | 2014/01/14 | Deciphered Date | 2015/01/14 |

THIS SHEET OF ENGINEERING DRAWING IS THE PROPRIETARY PROPERTY OF COMPAL ELECTRONICS, INC. AND CONTAINS CONFIDENTIAL AND TRADE SECRET INFORMATION. THIS SHEET MAY NOT BE TRANSFERED FROM THE CUSTODY OF THE COMPETENT DIVISION OF R&D DEPARTMENT EXCEPT AS AUTHORIZED BY COMPAL ELECTRONICS, INC. NEITHER THIS SHEET NOR THE INFORMATION IT CONTAINS MAY BE USED BY OR DISCLOSED TO ANY THIRD PARTY WITHOUT PRIOR WRITTEN CONSENT OF COMPAL ELECTRONICS, INC.

**Compal Electronics, Inc.**

Title: ***DC Conn***

Size | Document Number: **LAB151P** | Rev: 1.0

Date: Tuesday, January 21, 2014 | Sheet 34 of 48

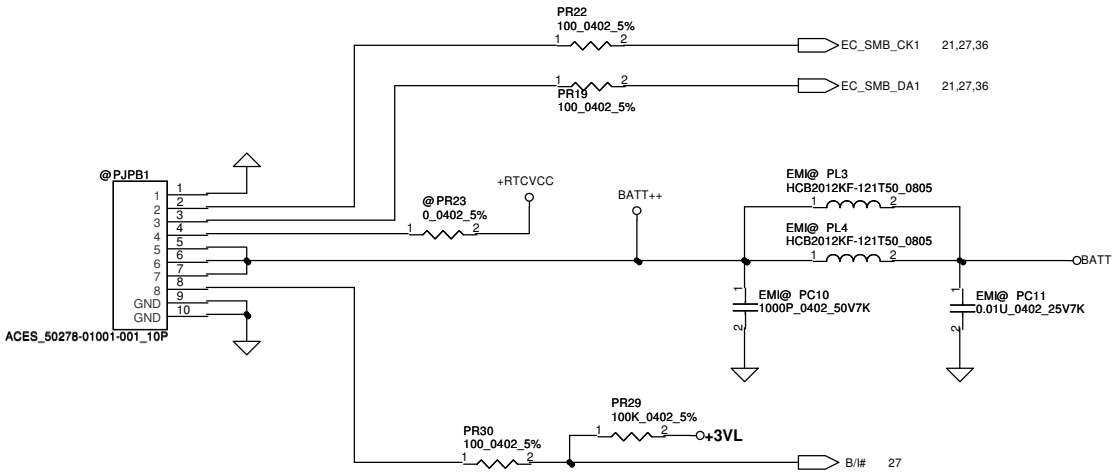


| Security Classification | Compal Secret Data | | |
|---|---|---|---|
| Issued Date | 2014/01/14 | Deciphered Date | 2015/01/14 |

THIS SHEET OF ENGINEERING DRAWING IS THE PROPRIETARY PROPERTY OF COMPAL ELECTRONICS, INC. AND CONTAINS CONFIDENTIAL AND TRADE SECRET INFORMATION. THIS SHEET MAY NOT BE TRANSFERED FROM THE CUSTODY OF THE COMPETENT DIVISION OF R&D DEPARTMENT EXCEPT AS AUTHORIZED BY COMPAL ELECTRONICS, INC. NEITHER THIS SHEET NOR THE INFORMATION IT CONTAINS MAY BE USED BY OR DISCLOSED TO ANY THIRD PARTY WITHOUT PRIOR WRITTEN CONSENT OF COMPAL ELECTRONICS, INC.

**Compal Electronics, Inc.**

Title: ***BATT Conn***

Size | Document Number: **LAB151P** | Rev: 1.0

Date: Tuesday, January 21, 2014 | Sheet 35 of 48

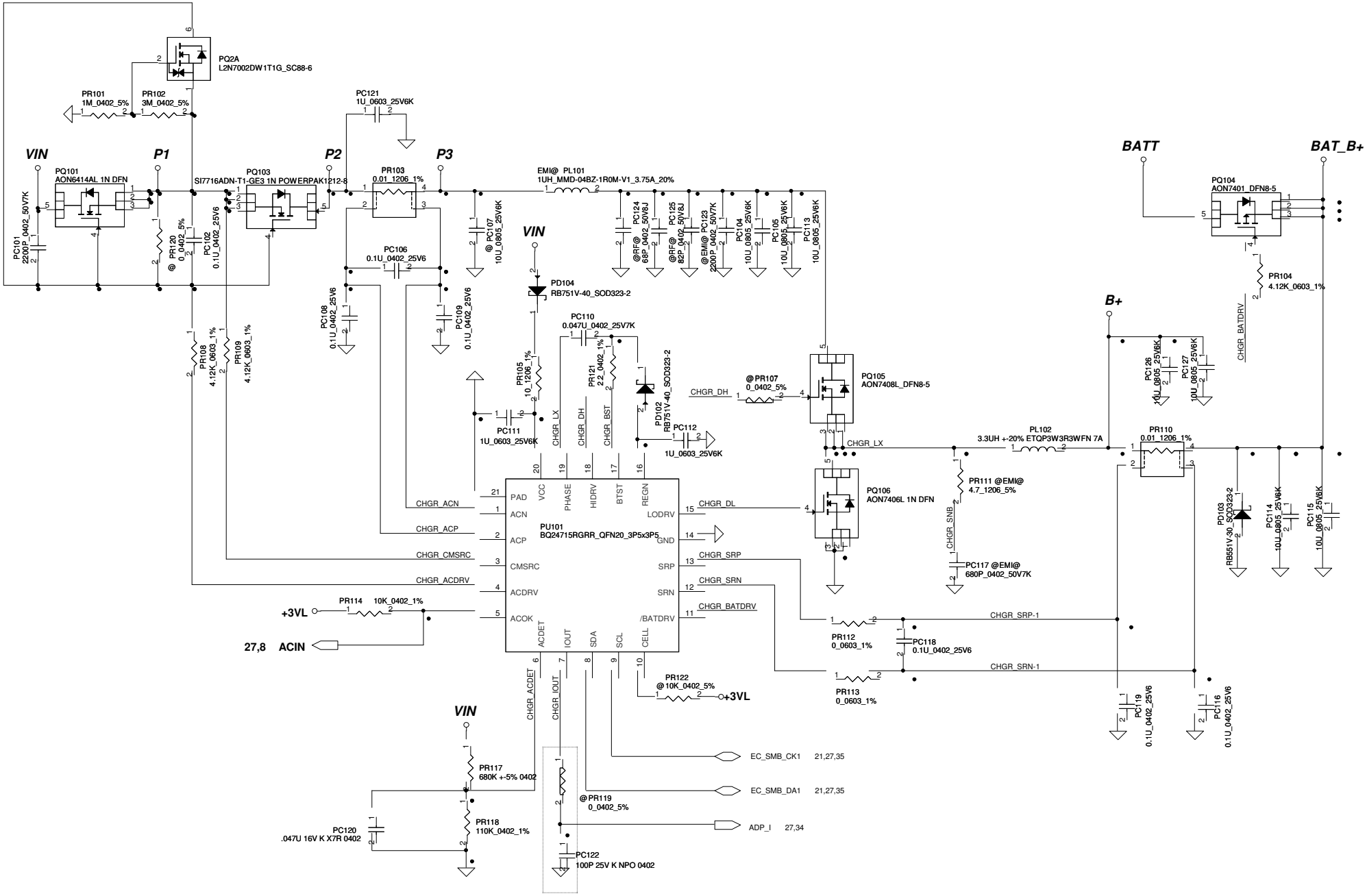


| Security Classification | Compal Secret Data | | |
|---|---|---|---|
| Issued Date | 2014/01/14 | Deciphered Date | 2015/01/14 |

THIS SHEET OF ENGINEERING DRAWING IS THE PROPRIETARY PROPERTY OF COMPAL ELECTRONICS, INC. AND CONTAINS CONFIDENTIAL AND TRADE SECRET INFORMATION. THIS SHEET MAY NOT BE TRANSFERED FROM THE CUSTODY OF THE COMPETENT DIVISION OF R&D DEPARTMENT EXCEPT AS AUTHORIZED BY COMPAL ELECTRONICS, INC. NEITHER THIS SHEET NOR THE INFORMATION IT CONTAINS MAY BE USED BY OR DISCLOSED TO ANY THIRD PARTY WITHOUT PRIOR WRITTEN CONSENT OF COMPAL ELECTRONICS, INC.

**Compal Electronics, Inc.**

Title: ***CHARGER***

Size | Document Number: LAB151P | Rev: 1.0

Date: Tuesday, January 21, 2014 | Sheet 36 of 48

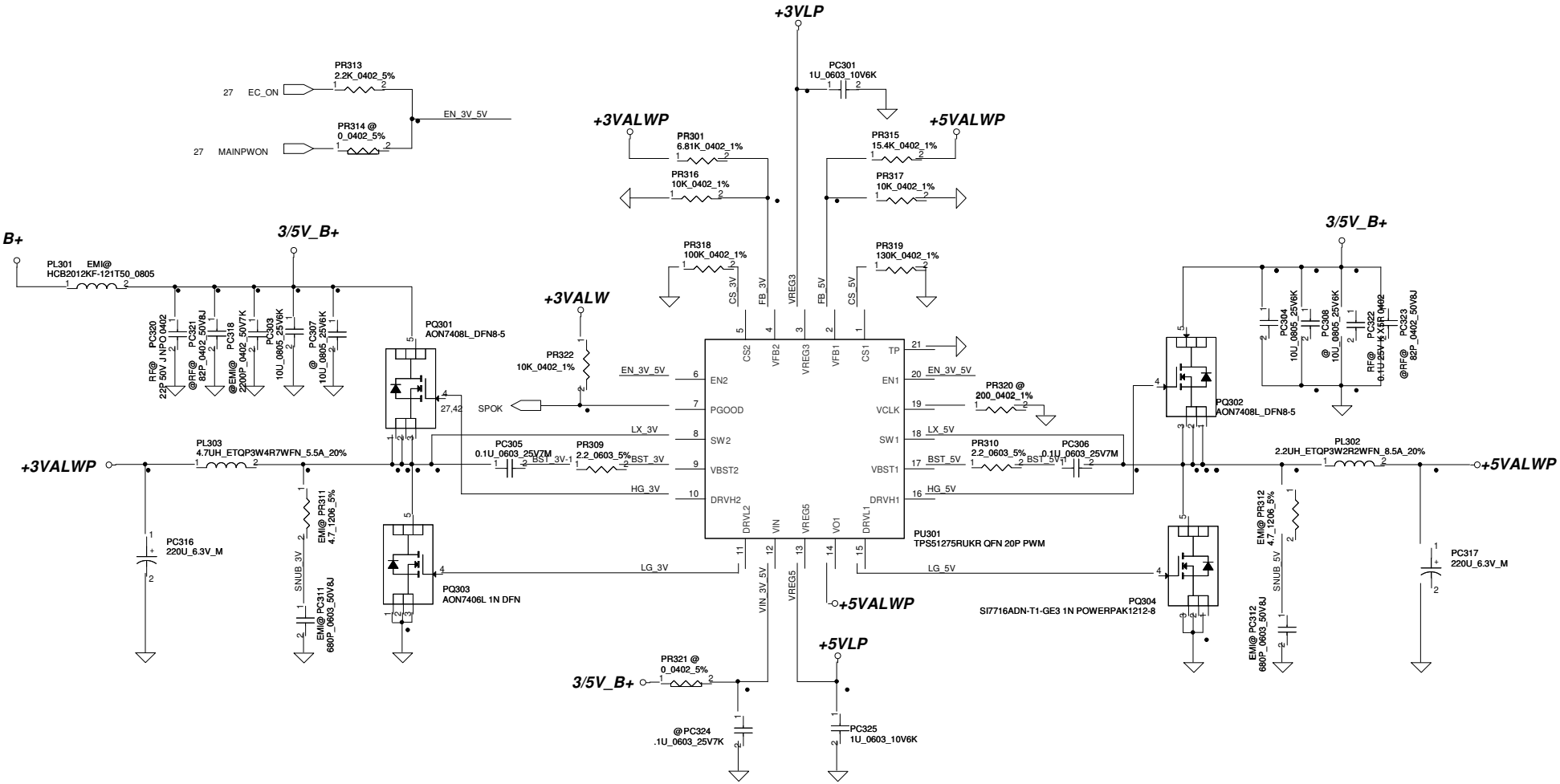


| | |
|---|---|
| +3VALW | +5VALW |
| Ipeak=3.85A | Ipeak=8.96A |
| TDC=2.7A | TDC=6.27A |

| Security Classification | Compal Secret Data | | |
|---|---|---|---|
| Issued Date | 2014/01/14 | Deciphered Date | 2015/01/14 |

THIS SHEET OF ENGINEERING DRAWING IS THE PROPRIETARY PROPERTY OF COMPAL ELECTRONICS, INC. AND CONTAINS CONFIDENTIAL AND TRADE SECRET INFORMATION. THIS SHEET MAY NOT BE TRANSFERED FROM THE CUSTODY OF THE COMPETENT DIVISION OF R&D DEPARTMENT EXCEPT AS AUTHORIZED BY COMPAL ELECTRONICS, INC. NEITHER THIS SHEET NOR THE INFORMATION IT CONTAINS MAY BE USED BY OR DISCLOSED TO ANY THIRD PARTY WITHOUT PRIOR WRITTEN CONSENT OF COMPAL ELECTRONICS, INC.

**Compal Electronics, Inc.**

Title: *3VALW/5VALW*

Size: Custom | Document Number: LAB151P | Rev: 1.0

Date: | Sheet 37 of 48

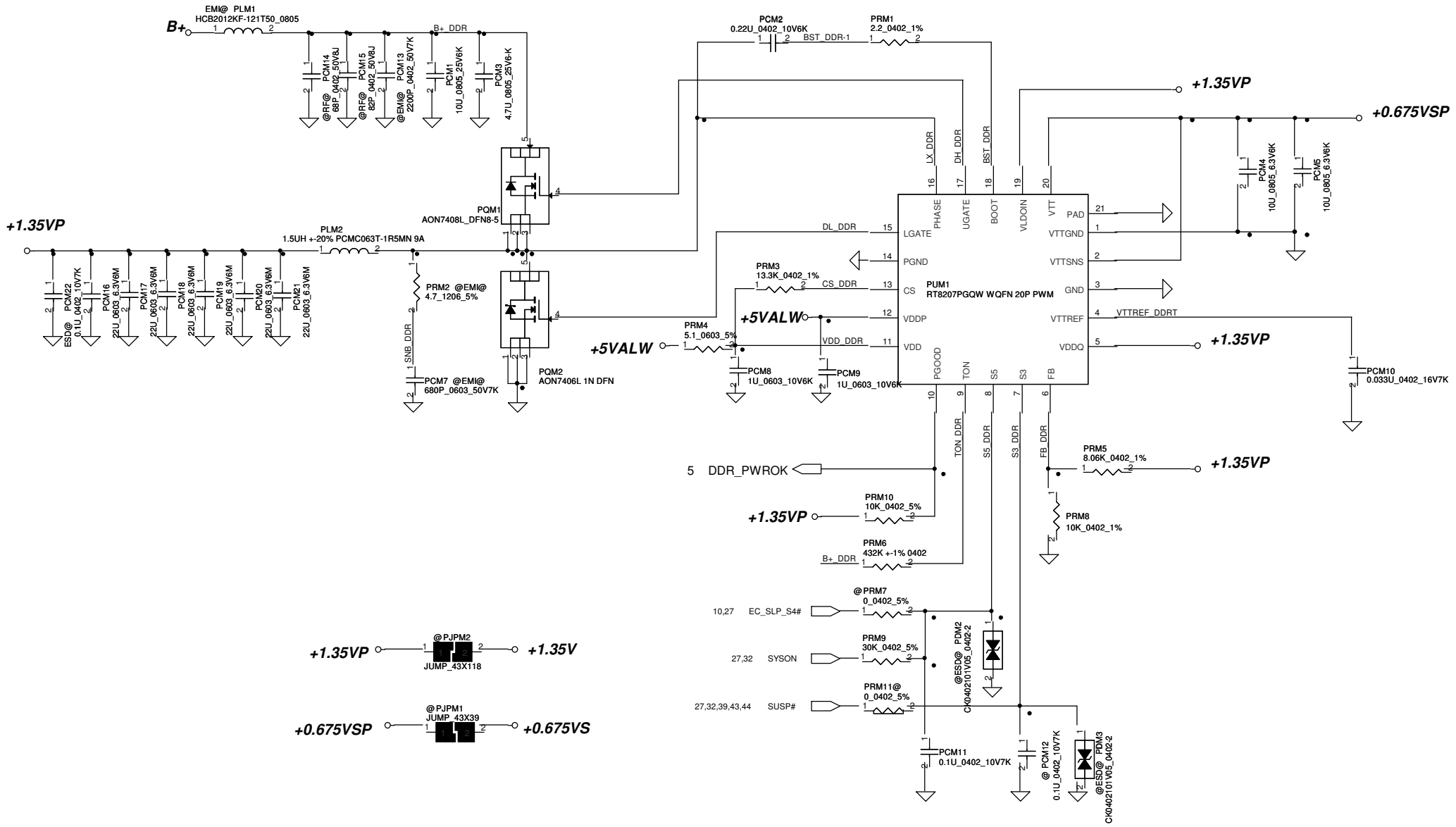


| Security Classification | Compal Secret Data | | |
|---|---|---|---|
| Issued Date | 2014/01/14 | Deciphered Date | 2015/01/14 |

THIS SHEET OF ENGINEERING DRAWING IS THE PROPRIETARY PROPERTY OF COMPAL ELECTRONICS, INC. AND CONTAINS CONFIDENTIAL AND TRADE SECRET INFORMATION. THIS SHEET MAY NOT BE TRANSFERED FROM THE CUSTODY OF THE COMPETENT DIVISION OF R&D DEPARTMENT EXCEPT AS AUTHORIZED BY COMPAL ELECTRONICS, INC. NEITHER THIS SHEET NOR THE INFORMATION IT CONTAINS MAY BE USED BY OR DISCLOSED TO ANY THIRD PARTY WITHOUT PRIOR WRITTEN CONSENT OF COMPAL ELECTRONICS, INC.

**Compal Electronics, Inc.**

Title: **1.35V/0.675VS**

Size: Custom | Document Number: LA-B151P | Rev: 1.0

Date: Tuesday, January 21, 2014 | Sheet 38 of 48

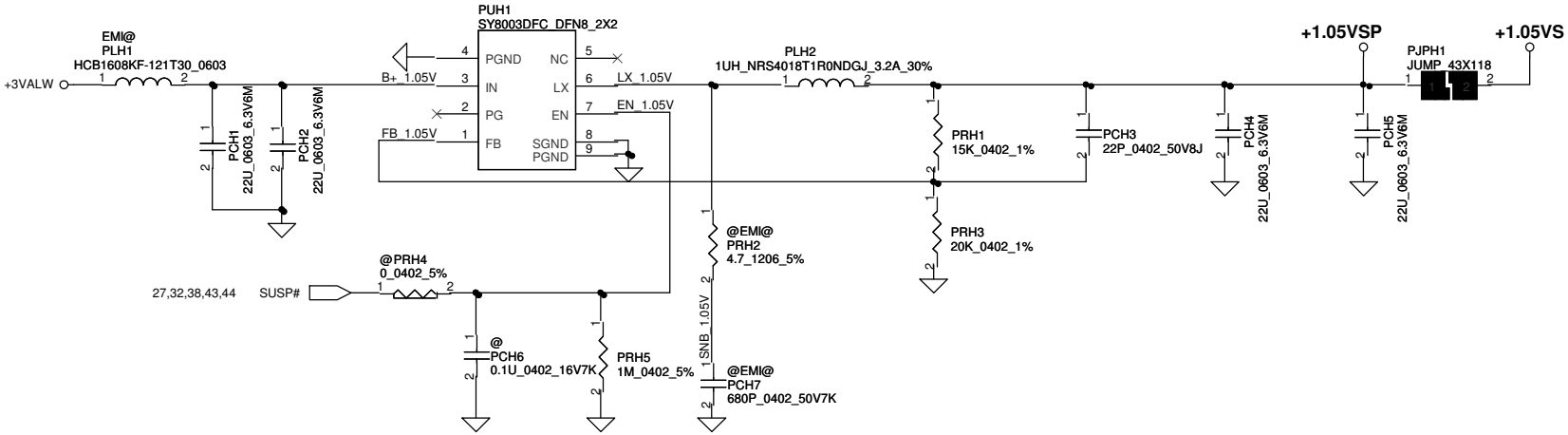


| Security Classification | Compal Secret Data | | |
|---|---|---|---|
| Issued Date | 2014/01/14 | Deciphered Date | 2015/01/14 |

THIS SHEET OF ENGINEERING DRAWING IS THE PROPRIETARY PROPERTY OF COMPAL ELECTRONICS, INC. AND CONTAINS CONFIDENTIAL AND TRADE SECRET INFORMATION. THIS SHEET MAY NOT BE TRANSFERED FROM THE CUSTODY OF THE COMPETENT DIVISION OF R&D DEPARTMENT EXCEPT AS AUTHORIZED BY COMPAL ELECTRONICS, INC. NEITHER THIS SHEET NOR THE INFORMATION IT CONTAINS MAY BE USED BY OR DISCLOSED TO ANY THIRD PARTY WITHOUT PRIOR WRITTEN CONSENT OF COMPAL ELECTRONICS, INC.

**Compal Electronics, Inc.**

Title: ***1.05VS***

Size | Document Number: **LAB151P** | Rev: 1.0

Date: Tuesday, January 21, 2014 | Sheet 39 of 48

Design Note
This circuit is for ULC 1+1, 7.5W.

CPU: Icc=12A,
Loadline: -5.9 m V/A

GFX(GT2): Icc=14A
Loadline: -5.9 m V/A

Layout Note
Reduce Acoustic Noise
1. The AL bulk capacitor of B+ should be very close to CPU_CORE MOSFET.
2. Input ceramic caps must place on symmetry same location on top side and bottom side.

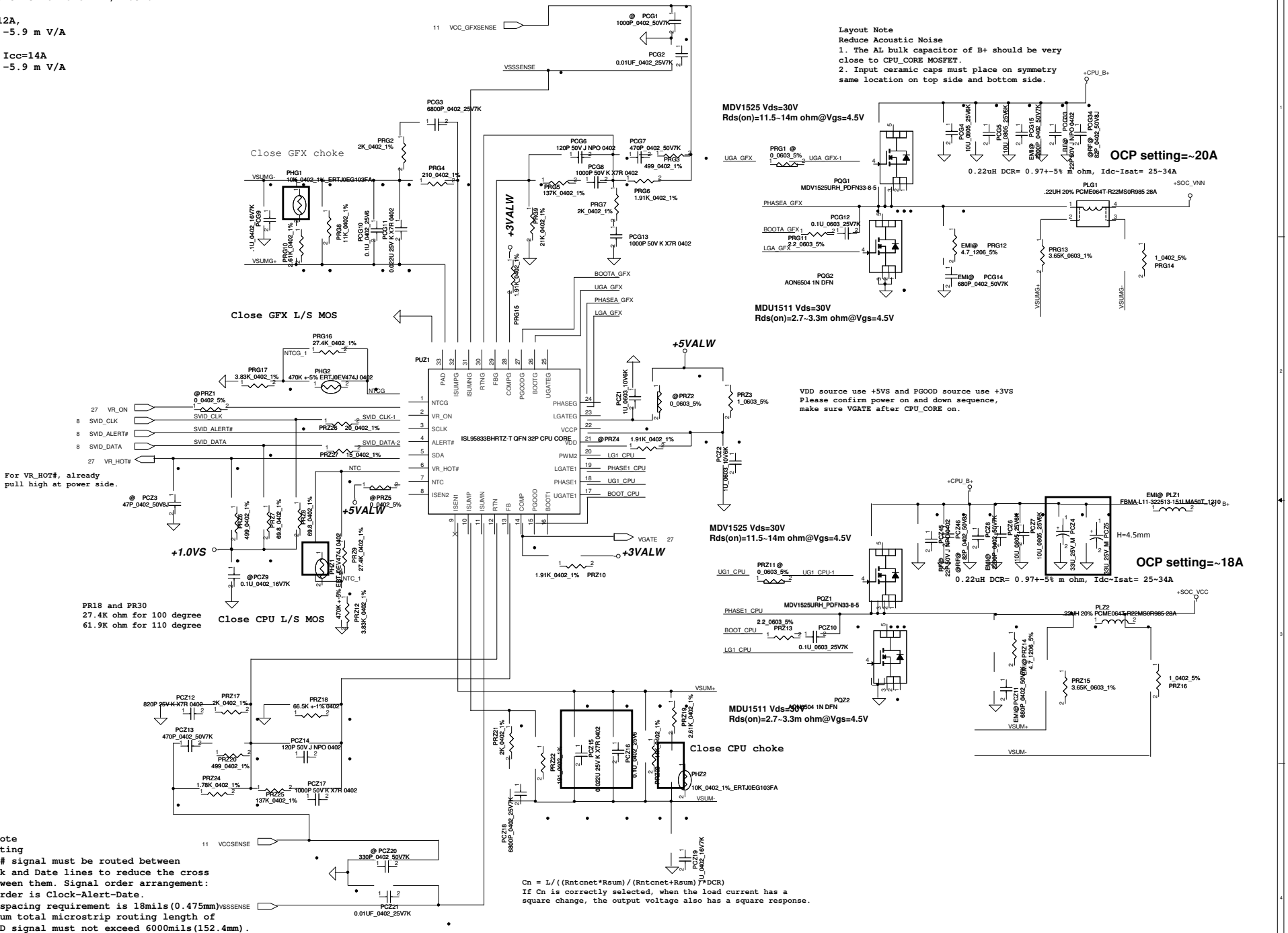


Cn = L/((Rntcnet*Rsum)/(Rntcnet+Rsum)*DCR)
If Cn is correctly selected, when the load current has a square change, the output voltage also has a square response.

Layout Note
SVID routing
1. Alert# signal must be routed between the Clock and Date lines to reduce the cross talk between them. Signal order arrangement: mobile order is Clock-Alert-Date.
2. SVID spacing requirement is 18mils(0.475mm)
3. Maximum total microstrip routing length of each SVID signal must not exceed 6000mils(152.4mm).
4. The SVID bus must be ground reference, It cannot be referenced to input (Vbat or 12V) power plans as they can couple noise into the SVID bus as power states change.
5. Avoid routing under noisy circuit, e.g. switch node , Gate driver, B+, Vin, high speed signal.
6. When SVID signal changes Layer, GND return path may be changed also. We need add GND via for GND reference.

| Security Classification | Compal Secret Data | | | Compal Electronics, Inc. |
|---|---|---|---|---|
| Issued Date | 2014/01/14 | Deciphered Date | 2015/01/14 | Title: SOC_VCC/SOC_VNN |
| THIS SHEET OF ENGINEERING DRAWING IS THE PROPRIETARY PROPERTY OF COMPAL ELECTRONICS, INC. AND CONTAINS CONFIDENTIAL AND TRADE SECRET INFORMATION. THIS SHEET MAY NOT BE TRANSFERRED FROM THE CUSTODY OF THE COMPETENT DIVISION OF R&D DEPARTMENT EXCEPT AS AUTHORIZED BY COMPAL ELECTRONICS, INC. NEITHER THIS SHEET NOR THE INFORMATION IT CONTAINS MAY BE USED BY OR DISCLOSED TO ANY THIRD PARTY WITHOUT PRIOR WRITTEN CONSENT OF COMPAL ELECTRONICS, INC. | | | | Document Number: LAB151P — Rev: 1.0 |
| | | | | Date: Tuesday, January 21, 2014 — Sheet 40 of 48 |

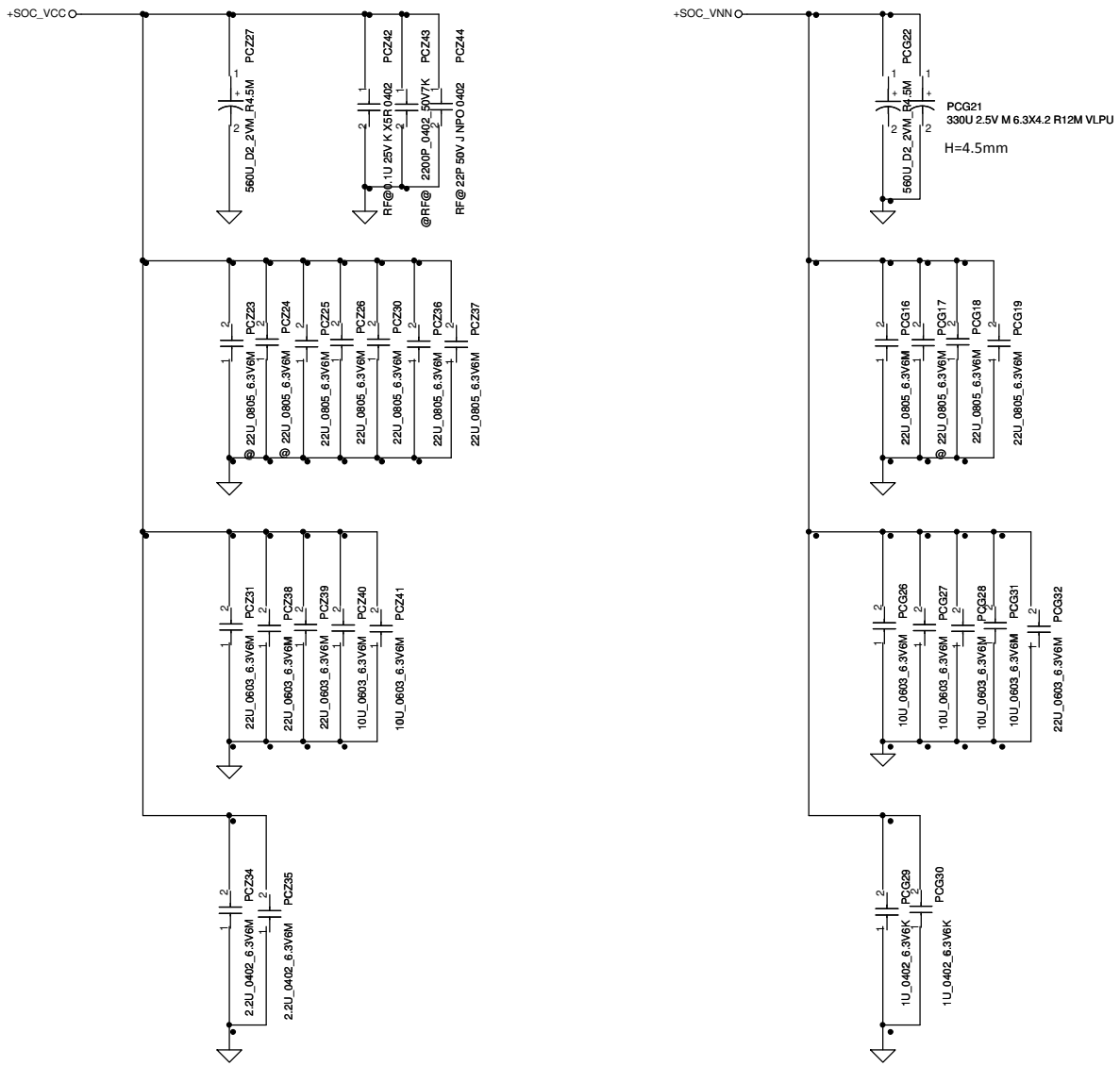


| Security Classification | Compal Secret Data | | | Compal Electronics, Inc. |
|---|---|---|---|---|
| Issued Date | 2014/01/14 | Deciphered Date | 2015/01/14 | Title: *PROCESSOR DECOUPLING* |
| | | | | Size: Custom; Document Number: LAB151P; Rev: 1.0 |
| | | | | Date: ; Sheet 41 of 48 |

THIS SHEET OF ENGINEERING DRAWING IS THE PROPRIETARY PROPERTY OF COMPAL ELECTRONICS, INC. AND CONTAINS CONFIDENTIAL AND TRADE SECRET INFORMATION. THIS SHEET MAY NOT BE TRANSFERED FROM THE CUSTODY OF THE COMPETENT DIVISION OF R&D DEPARTMENT EXCEPT AS AUTHORIZED BY COMPAL ELECTRONICS, INC. NEITHER THIS SHEET NOR THE INFORMATION IT CONTAINS MAY BE USED BY OR DISCLOSED TO ANY THIRD PARTY WITHOUT PRIOR WRITTEN CONSENT OF COMPAL ELECTRONICS, INC.

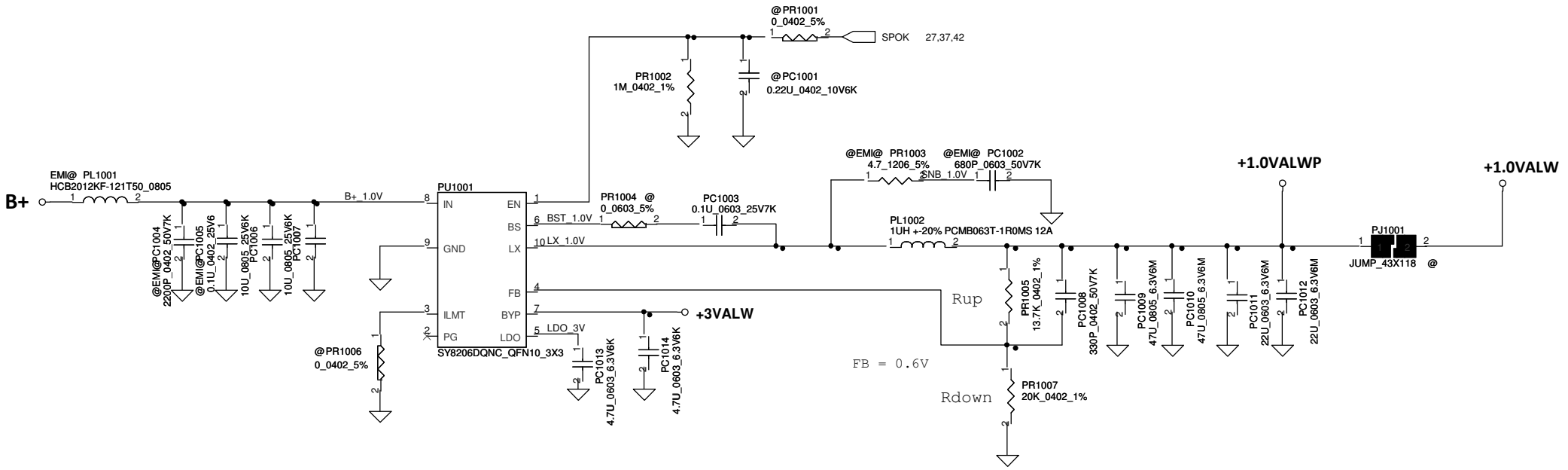


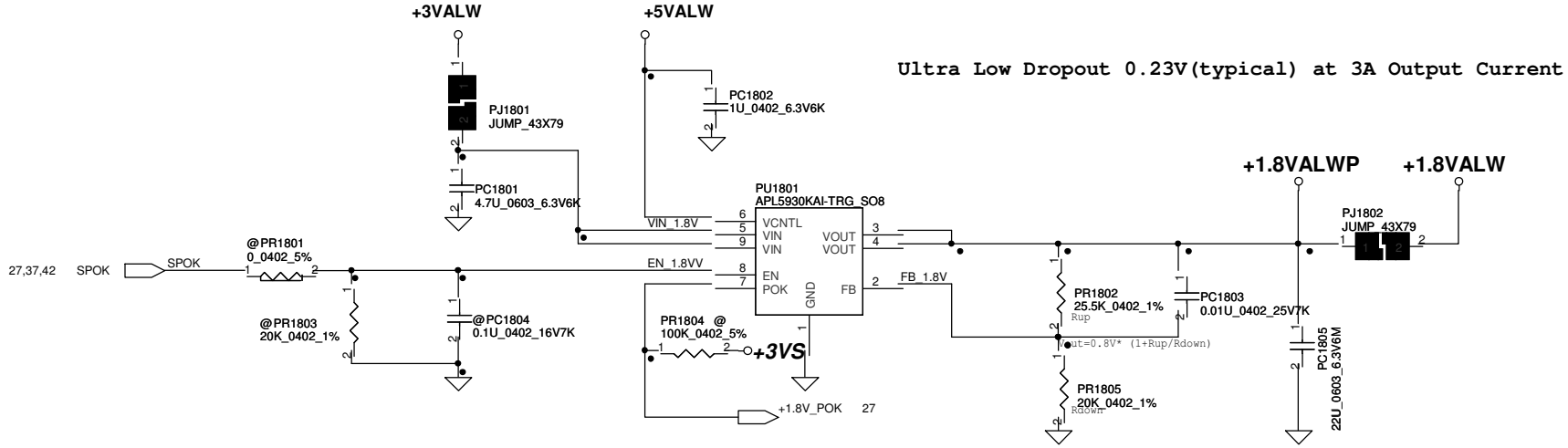


Ultra Low Dropout 0.23V(typical) at 3A Output Current

| Security Classification | Compal Secret Data | | |
|---|---|---|---|
| Issued Date | 2014/01/14 | Deciphered Date | 2015/01/14 |

THIS SHEET OF ENGINEERING DRAWING IS THE PROPRIETARY PROPERTY OF COMPAL ELECTRONICS, INC. AND CONTAINS CONFIDENTIAL AND TRADE SECRET INFORMATION. THIS SHEET MAY NOT BE TRANSFERED FROM THE CUSTODY OF THE COMPETENT DIVISION OF R&D DEPARTMENT EXCEPT AS AUTHORIZED BY COMPAL ELECTRONICS, INC. NEITHER THIS SHEET NOR THE INFORMATION IT CONTAINS MAY BE USED BY OR DISCLOSED TO ANY THIRD PARTY WITHOUT PRIOR WRITTEN CONSENT OF COMPAL ELECTRONICS, INC.

**Compal Electronics, Inc.**

Title: *1.8VALW/1.5VS*

Size: B | Document Number: LAB151P | Rev: 1.0

Date: | Sheet 42 of 48

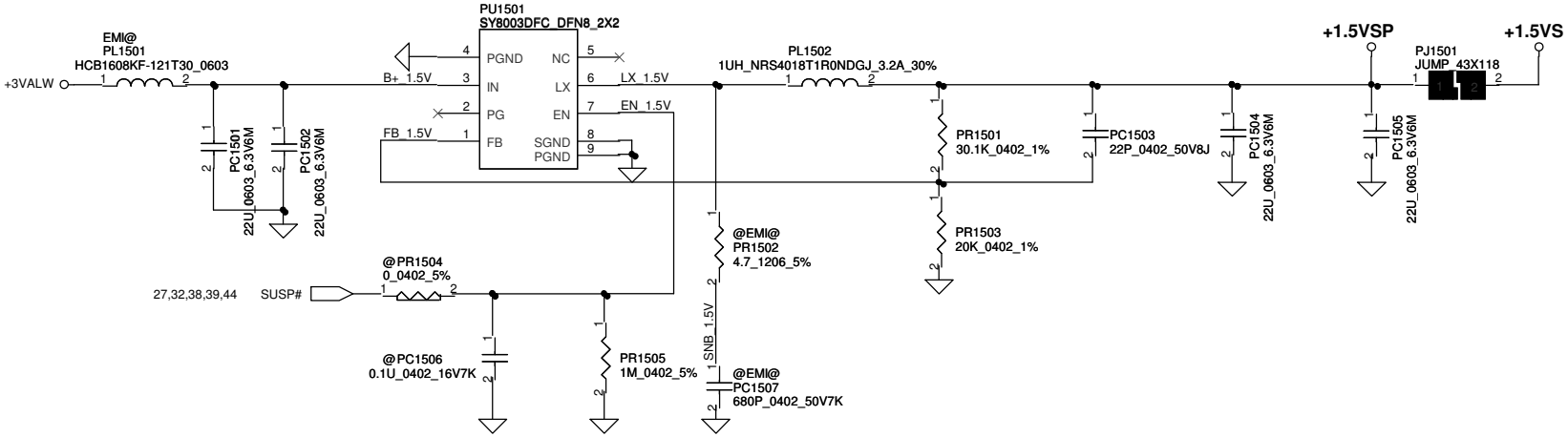


| Security Classification | Compal Secret Data | | |
|---|---|---|---|
| Issued Date | 2014/01/14 | Deciphered Date | 2015/01/14 |

THIS SHEET OF ENGINEERING DRAWING IS THE PROPRIETARY PROPERTY OF COMPAL ELECTRONICS, INC. AND CONTAINS CONFIDENTIAL AND TRADE SECRET INFORMATION. THIS SHEET MAY NOT BE TRANSFERED FROM THE CUSTODY OF THE COMPETENT DIVISION OF R&D DEPARTMENT EXCEPT AS AUTHORIZED BY COMPAL ELECTRONICS, INC. NEITHER THIS SHEET NOR THE INFORMATION IT CONTAINS MAY BE USED BY OR DISCLOSED TO ANY THIRD PARTY WITHOUT PRIOR WRITTEN CONSENT OF COMPAL ELECTRONICS, INC.

**Compal Electronics, Inc.**

Title: **1.0VALW**

Size: B | Document Number: LAB151P | Rev: 1.0

Date: Tuesday, January 21, 2014 | Sheet 43 of 48

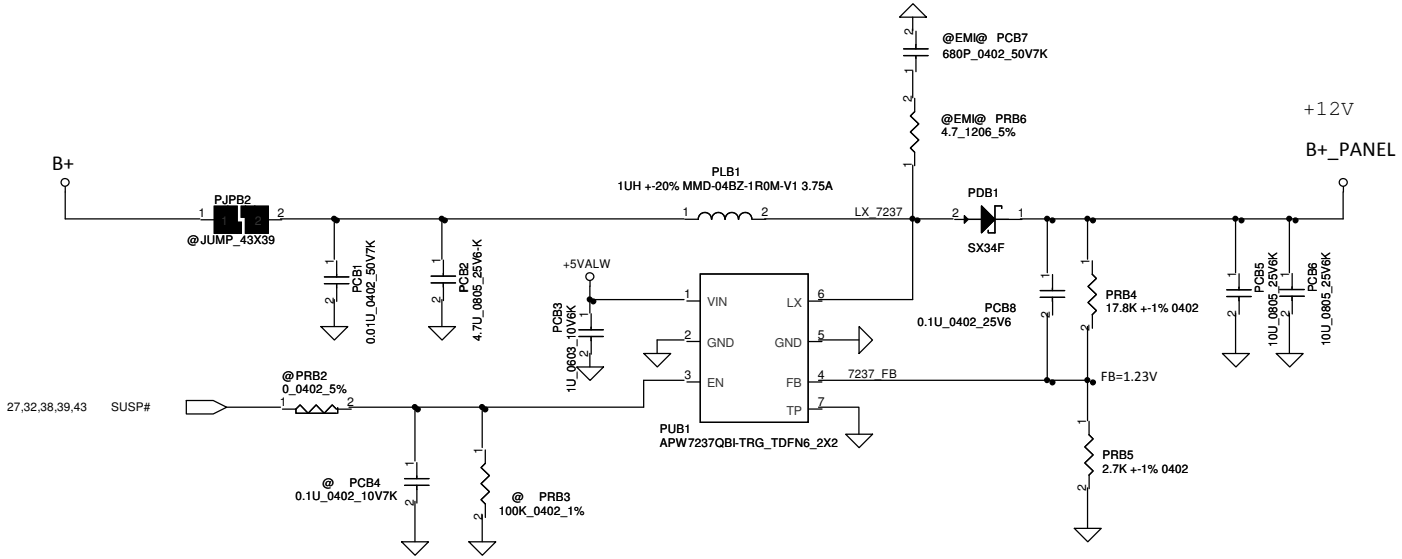


| Security Classification | Compal Secret Data | | |
|---|---|---|---|
| Issued Date | 2014/01/14 | Deciphered Date | 2015/01/14 |

THIS SHEET OF ENGINEERING DRAWING IS THE PROPRIETARY PROPERTY OF COMPAL ELECTRONICS, INC. AND CONTAINS CONFIDENTIAL AND TRADE SECRET INFORMATION. THIS SHEET MAY NOT BE TRANSFERED FROM THE CUSTODY OF THE COMPETENT DIVISION OF R&D DEPARTMENT EXCEPT AS AUTHORIZED BY COMPAL ELECTRONICS, INC. NEITHER THIS SHEET NOR THE INFORMATION IT CONTAINS MAY BE USED BY OR DISCLOSED TO ANY THIRD PARTY WITHOUT PRIOR WRITTEN CONSENT OF COMPAL ELECTRONICS, INC.

**Compal Electronics, Inc.**

Title: **B+_PANEL**

Size: A3 | Document Number: LAB151P | Rev: 1.0

Date: Tuesday, January 21, 2014 | Sheet 44 of 48

# Version change list (P.I.R. List)



| Item | Fixed Issue | Reason for change | Rev. | PG# | Modify List | Date | Phase |
|---|---|---|---|---|---|---|---|
| 1 | | ME update screw hold | 0.11 | P31 | Change H8 to H_3P0 from H_2P5 | 10/15 | |
| 2 | | ESD Request | 0.11 | P24 | Change CA36/CA37 to SC400006R00 | 10/15 | |
| 3 | | Vendor suggestion | 0.11 | P15 | Change LT4 to 0603 | 10/16 | |
| 4 | | EMI Request | 0.11 | P24 | Change RA10/LA1 to EMI@ | 10/16 | |
| 5 | | Vendor suggestion | 0.11 | P30 | Add R21 for debug | 10/16 | |
| 6 | | For BIOS debug | 0.11 | P9<br>P27 | Add D2/NMI_DBG#/NMI_DBG#_SOC | 10/16 | |
| 7 | | Change to cost down version | 0.11 | P15 | Change U2 to SA00007A300 | 10/16 | |
| 8 | | EMI Request | 0.11 | P17,P23<br>P28,P29 | Change L3/L4/L6/L7/L8/L50/<br>L12/LB84/LB83/LB82 to SM070003Y00 | 10/16 | |
| 9 | | HW Design Change | 0.11 | P10 | Change power of U55 to +3VALW_EC | 10/18 | |
| 10 | | For Debug | 0.11 | P29 | Add JPW1/JPW2 | 10/18 | |
| 11 | | HW Design Change | 0.11 | P28 | Add R1025/Q5 for LED/Vibirator | 10/21 | |
| 12 | | HW Design Change | 0.11 | P20 | Change TS1 to 10/100 Transformer<br>(SP050007K00 ) | 10/21 | |
| 13 | | HW Design Change | 0.11 | P18 | Change JSIM1.4 to GND/<br>Remove R246/<br>Change R247.1 to +3VS_WWAN_NGFF | 10/21 | |
| 14 | | HW Design Change | 0.11 | P09 | Add DDR_SMB_CLK/DDR_SMB_DATA for DDR<br>Add R101/R102 for isolate SM Bus<br>Add R106/R107 & Change RP49 pin assign | 10/21 | |
| 15 | | HW Design Change | 0.11 | P06 | Reserve R108 | 10/21 | |
| 16 | | Customer Spec Change | 0.11 | P24 | Change Audio Codec to ALC3227 | 10/22 | |
| 17 | | Customer Requirement | 0.11 | P09<br>P28 | Add Q73/R110/R109 for TP<br>Add TP_SMB_DATA/TP_SMB_CLK for TP | 10/22 | |
| 18 | | HW Design Change | 0.11 | P21 | Change U25.14 to +3VALW_GSEN from +3V_GSEN | 10/22 | |
| 19 | | EMI Request | 0.11 | P24 | Add LA1 | 10/23 | |
| 20 | | EMC Request | 0.11 | P24 | Remove DA12/DA13/DA8/CA66/CA64<br>Remove CA67/CA65/DA9/CA46/CA50 | 10/23 | |
| 21 | | ESD Request | 0.11 | P18 | Add C73 | 10/23 | |
| 22 | | HW Design Change | 0.11 | P10 | Change U58/R3 to @ for S3 autowake issue | 10/23 | |
| 23 | | ME Request | 0.11 | P20 | Change footprint of JLAN1 for ME<br>connector modify | 10/23 | |
| 24 | | ME Request | 0.11 | P26 | Change footprint of JCR1 for ME<br>connector modify | 10/23 | |
| 25 | | EMI Request | 0.12 | 0.29 | Shifter JIO1 Pin assign<br>USB20_HUB_P2_R change to Pin 12<br>USB20_HUB_N2_R change to Pin 13<br>USB_ON# change to Pin10 | 10/24 | |

THIS SHEET OF ENGINEERING DRAWING IS THE PROPRIETARY PROPERTY OF COMPAL ELECTRONICS, INC. AND CONTAINS CONFIDENTIAL AND TRADE SECRET INFORMATION. THIS SHEET MAY NOT BE TRANSFERED FROM THE CUSTODY OF THE COMPETENT DIVISION OF R&D DEPARTMENT EXCEPT AS AUTHORIZED BY COMPAL ELECTRONICS, INC. NEITHER THIS SHEET NOR THE INFORMATION IT CONTAINS MAY BE USED BY OR DISCLOSED TO ANY THIRD PARTY WITHOUT PRIOR WRITTEN CONSENT OF COMPAL ELECTRONICS, INC.

| Security Classification | Compal Secret Data | | |
|---|---|---|---|
| Issued Date | 2014/01/14 | Deciphered Date | 2015/01/14 |

Compal Electronics, Inc.

Title: HW PIR

Size: Custom | Document Number: LA-B151P | Rev: 1.0

Date: Tuesday, January 21, 2014 | Sheet 45 of 48

| Item | Fixed Issue | Reason for change | Rev. | PG# | Modify List | Date | Phase |
|---|---|---|---|---|---|---|---|
| 26 | | EMI Request | 0.12 | P15 | Add RT9/RT10 for translator mode control | 10/24 | |
| 27 | | Power Request | 0.12 | P27 | Change WL_OFF# to EC Pin 68<br>Add VIN_ADC to EC Pin75 | 10/24 | |
| 28 | | ME Request | 0.12 | P29 | Change JPWR1 to E-T_6710K-Y06M-31L | 10/25 | |
| 29 | | Customer Requirement | 0.12 | P22 | Change power of UU1 from +3/5VS to +3/5VALW | 10/25 | |
| 30 | | HW Design Change | 0.12 | P22 | Change power of RU13 from +5VS to +5VALW | 10/26 | |
| 31 | | RF Request | 0.12 | P16 | Change CG3 to 33PF | 10/26 | |
| 32 | | RF Request | 0.12 | P21 | Add C151 for +5VS_HDD | 10/26 | |
| 33 | | HW Design Change | 0.12 | P24<br>P25 | Change package of QA4 to SOT323-3<br>Change package of LB7 to 0402 | 10/28 | |
| 34 | | HW Design Change | 0.12 | P24 | Change QA5 to SB000008E10 | 10/28 | |
| 35 | | HW Design Change | 0.21 | P22 | Change footprint of CU15 to 0603 | 11/21 | |
| 36 | | Vender update firmware | 0.21 | P30 | Change US1 to SA000076330<br>IT8350E-128/CX-002C | 11/21 | |
| 37 | | HW Design Change | 0.21 | P09 | Rotate D2 direction | 11/21 | |
| 38 | | HW Design Change | 0.21 | P32 | Change U2102 to SA00006U600 AOZ1336 | 11/21 | |
| 39 | | HW Design Change | 0.21 | P27 | Change R244/R245 to @ | 11/21 | |
| 40 | | HW Design Change | 0.21 | P10 | Change U59/R4 to @ | 11/21 | |
| 41 | | Vender recommend | 0.21 | P24<br>P25 | Modify audio code and Amp. circuit | 11/21 | |
| 42 | | HW Design Change | 0.21 | P08 | Change TS_INT# to GPIO_S0_SC_94/GPIO_S5_11<br>Add D10/U67/R1024/R1026 for leakage | 11/22 | |
| 43 | | HW Design Change | 0.21 | P31 | Remove co-layout circuit of SLB9635TT1.2 | 11/22 | |
| 44 | | RF Request | 0.21 | P28 | Change POUT to JPSEN1 | 11/22 | |
| 45 | | ME Request | 0.21 | P16 | Rotate JLCD1 direction | 11/22 | |
| 46 | | HW Design Change | 0.21 | P09 | Swap pin assign of RP54 for layout | 11/22 | |
| 47 | | BIOS Request | 0.21 | P10 | Change U59/R4 to mount | 11/25 | |
| 48 | | HW Design Change | 0.21 | P24 | Change LA10 to HCB2012VF-601T20<br>Change LA8 to PBY160808T-601Y-N | 11/26 | |
| 49 | | Vender recommend | 0.21 | P30 | Add R1031/R1032 | 11/26 | |
| 50 | | Parts update revision | 0.21 | P03 | Change N3520@ CPU P/N to SA00007E940<br>Change N2820@ CPU P/N to SA00007EK30 | 11/27 | |



THIS SHEET OF ENGINEERING DRAWING IS THE PROPRIETARY PROPERTY OF COMPAL ELECTRONICS, INC. AND CONTAINS CONFIDENTIAL AND TRADE SECRET INFORMATION. THIS SHEET MAY NOT BE TRANSFERED FROM THE CUSTODY OF THE COMPETENT DIVISION OF R&D DEPARTMENT EXCEPT AS AUTHORIZED BY COMPAL ELECTRONICS, INC. NEITHER THIS SHEET NOR THE INFORMATION IT CONTAINS MAY BE USED BY OR DISCLOSED TO ANY THIRD PARTY WITHOUT PRIOR WRITTEN CONSENT OF COMPAL ELECTRONICS, INC.

| Item | Fixed Issue | Reason for change | Rev. | PG# | Modify List | Date | Phase |
|---|---|---|---|---|---|---|---|
| 51 | | HW Design Change | 0.21 | P24 | Change RA41/RA42/RA43/RA44 to SM010008A00 | 11/27 | |
| 52 | | HW Design Change | 0.21 | P27 | Change R214 to 15K for PV | 11/27 | |
| 53 | | HW Design Change | 0.21 | P8,P11<br>P12,P18<br>P19,P20<br>P21,P22<br>P26,P27 | Change Footprint to Short Pad<br>R266/R998/R1022/R1023/R1021/RF34/RN2/R287<br>RH411/RH412/R227/RA35/RA24/RA25/RR9/R482<br>L9/R222/R175 | 11/27 | |
| 54 | | ME Request | 0.21 | P31 | Change H8 size | 11/27 | |
| 55 | | HW Design Change | 0.21 | P27 | Change R244/R245 to mount | 11/28 | |
| 56 | | HW Design Change | 0.21 | P10 | Add R13/R14<br>Change R1/R2 to @ | 11/28 | |
| 57 | | HW Design Change | 0.21 | P15 | Change R1068 to mount | 11/28 | |
| 58 | | HW Design Change | 0.21 | P28 | Add R188/R189 | 11/28 | |
| 59 | | Thermal Request | 0.21 | P06 | Add Q8 for thermal remote detect | 11/28 | |
| 60 | | ESD Request | 0.21 | P29 | Add C168/C169 | 11/28 | |
| 61 | | ESD Request | 0.21 | P29 | Remove D8 for layout space | 11/28 | |
| 62 | | ESD Request | 0.21 | P32,P27 | Add CF30/CF31 | 11/28 | |
| 63 | | HW Design Change | 0.21 | P27,P29 | Exchange net name: VOLUME+/VOLUME- | 11/28 | |
| 64 | | HW Design Change | 0.21 | P03 | Remove 9635@/9656@ from BOM option table | 11/28 | |
| 65 | | HW Design Change | 0.21 | P16 | Add R1069 for panel sequence | 11/29 | |
| 66 | | HW Design Change | 0.21 | P27 | Change L9 to 0603 | 12/01 | |
| 67 | | HW Design Change | 0.3 | P24 | Change DA5 to BAT54AW-L_SOT323<br>for layout space | 12/01 | |
| 68 | | ESD Request | 0.3 | P27 | Add C134/C139/C140/C141/C142/<br>Add C143/C144/C145 | 12/02 | |
| 69 | | HW Design Change | 0.3 | P08 | Add R1070 for RTC power consumption | 12/02 | |
| 70 | | HW Design Change | 0.3 | P27 | Add R230 for pull up HOME_INT# to +3VS | 12/03 | |
| 71 | | ESD Request | 0.3 | P27 | Add C147 | 12/03 | |
| 72 | | HW Design Change | 0.3 | P21 | Add RH414<br>Change power source of U25 to +3VL | 12/03 | |
| 73 | | Vender recommend | 0.3 | P08,P20 | Change C1009,C1010 to 18P<br>Change C1003,C1004 to 12P<br>Change CL15,CL16 to 12P | 12/12 | |
| 74 | | HW Design Change | 0.31 | P22 | Remove RA25 | 12/23 | |
| 75 | | HW Design Change | 0.31 | P09 | Add R179,R180,R181,R184 for reserve | 12/23 | |



THIS SHEET OF ENGINEERING DRAWING IS THE PROPRIETARY PROPERTY OF COMPAL ELECTRONICS, INC. AND CONTAINS CONFIDENTIAL AND TRADE SECRET INFORMATION. THIS SHEET MAY NOT BE TRANSFERED FROM THE CUSTODY OF THE COMPETENT DIVISION OF R&D DEPARTMENT EXCEPT AS AUTHORIZED BY COMPAL ELECTRONICS, INC. NEITHER THIS SHEET NOR THE INFORMATION IT CONTAINS MAY BE USED BY OR DISCLOSED TO ANY THIRD PARTY WITHOUT PRIOR WRITTEN CONSENT OF COMPAL ELECTRONICS, INC.

| Item | Fixed Issue | Reason for change | Rev. | PG# | Modify List | Date | Phase |
|---|---|---|---|---|---|---|---|
| 76 | | HW Design Change | 0.31 | P09 | Change RP54,RP50 to R111~R118 for debug | 12/23 | |
| 77 | | ME Request | 1.0 | P29 | Change JPWR1 to 6718K-Y06N-21L | 01/07 | |
| 78 | | Customer Change Spec | 1.0 | P27,P28 | Remove JPSEN1/POUT | 01/07 | |
| 79 | | HW Design Change | 1.0 | P08 | Remove R1024/D10<br>Change R1026/U67 to mount | 01/08 | |
| 80 | | HW Design Change | 1.0 | P10 | Change power source of U53 to +1.8VALW<br>Change power source of U61 to +1.8VALW<br>Change power source of U62 to +1.8VALW<br>Change power source of U64 to +1.8VALW | 01/08 | |
| 81 | | HW Design Change | 1.0 | P10 | Change power source of U54 to +3VALW_EC<br>Change power source of U57 to +3VALW_EC | 01/08 | |
| 82 | | HW Design Change | 1.0 | P10 | Remove R1/R2<br>Add R1024/R1033 | 01/08 | |
| 83 | | HW Design Change | 1.0 | P09 | Change R181/R180/R179/R184 to R_SHORT | 01/08 | |
| 84 | | HW Design Change | 1.0 | P30 | Change RR12/RR13/RR14 to R_SHORT | 01/08 | |
| 85 | | HW Design Change | 1.0 | P32 | Change CF26/CF27 to 3300PF | 01/08 | |
| 86 | | HW Design Change | 1.0 | P28 | Change R1025 to 120 ohm | 01/08 | |
| 87 | | HW Design Change | 1.0 | P15 | Remove UT3, CT24 for layout space | 01/08 | |
| 88 | | HW Design Change | 1.0 | P19 | Change RN6/RN8/R973 to @ | 01/08 | |
| 89 | | HW Design Change | 1.0 | P24,P25 | Change RA38 to R_SHORT<br>Change RA50/RA49/R274/R275 to R_SHORT | 01/08 | |
| 90 | | HW Design Change | 1.0 | P27,P28<br>P32 | Change R299/R189/RF4 to R_SHORT | 01/08 | |
| 91 | | HW Design Change | 1.0 | P08 | Swap RTC_RST#/RTC_TEST# | 01/08 | |
| 92 | | HW Design Change | 1.0 | P11 | Reserve L51/L52 for 1.35V | 01/09 | |
| 93 | | HW Design Change | 1.0 | P15,P30 | Change LT4/LB3 to R_SHORT | 01/09 | |
| 94 | | HW Design Change | 1.0 | P30 | Remove CH19/Y3/CH18<br>Connect Pin9 of US1 to GND | 01/09 | |
| 95 | | HW Design Change | 1.0 | P20 | Swap LAN_LINK#/LAN_ACT# | 01/10 | |
| 96 | | EMI Request | 1.0 | P16.P28 | Change L1/L2/R170/R171 to R_SHORT | 01/10 | |
| 97 | | HW Design Change | 1.0 | P25,P20 | Change RA50/RA49/R274/R275 to 0 ohm<br>Swap LAN_LINK#/LAN_ACT# | 01/13 | |
| 98 | | EMI Request | 1.0 | P17 | Change L4/L6/L7/L8 to @<br>Change R182/R186/R187/R190 to mount(20ohm)<br>Change R191/R192/R193/R194 to mount(20ohm) | 01/13 | |
| 99 | | EMI Request | 1.0 | P26 | Change CR12 to @<br>Change RR4/RR6/RR7/RR16/RR17 to mount | 01/13 | |
| 100 | | ID Request | 1.0 | P28 | Change R1025 to 56ohm | 01/14 | |



THIS SHEET OF ENGINEERING DRAWING IS THE PROPRIETARY PROPERTY OF COMPAL ELECTRONICS, INC. AND CONTAINS CONFIDENTIAL AND TRADE SECRET INFORMATION. THIS SHEET MAY NOT BE TRANSFERED FROM THE CUSTODY OF THE COMPETENT DIVISION OF R&D DEPARTMENT EXCEPT AS AUTHORIZED BY COMPAL ELECTRONICS, INC. NEITHER THIS SHEET NOR THE INFORMATION IT CONTAINS MAY BE USED BY OR DISCLOSED TO ANY THIRD PARTY WITHOUT PRIOR WRITTEN CONSENT OF COMPAL ELECTRONICS, INC.