Essentials Oak 14 Schematic

Chief River

2012-09-05

REV : A00

DY : None Installed
UMA: UMA only installed
OPS: DISCRTE OPTIMUS installed

M14 DIS

Wistron Corporation
21F, 88, Sec.1, Hsin Tai Wu Rd., Hsichih,
Taipei Hsien 221, Taiwan, R.O.C.

Title		
	Cover Page	
Size A3	Document Number OAK14 Chief River DIS	Rev A00
Date: Wednesday, September 05, 2012	Sheet 1 of 105	

Project code: 91.4WT01.001
91.4XP01.001
PCB P/N : 12204
Revision: A00

Oak14 Block Diagram

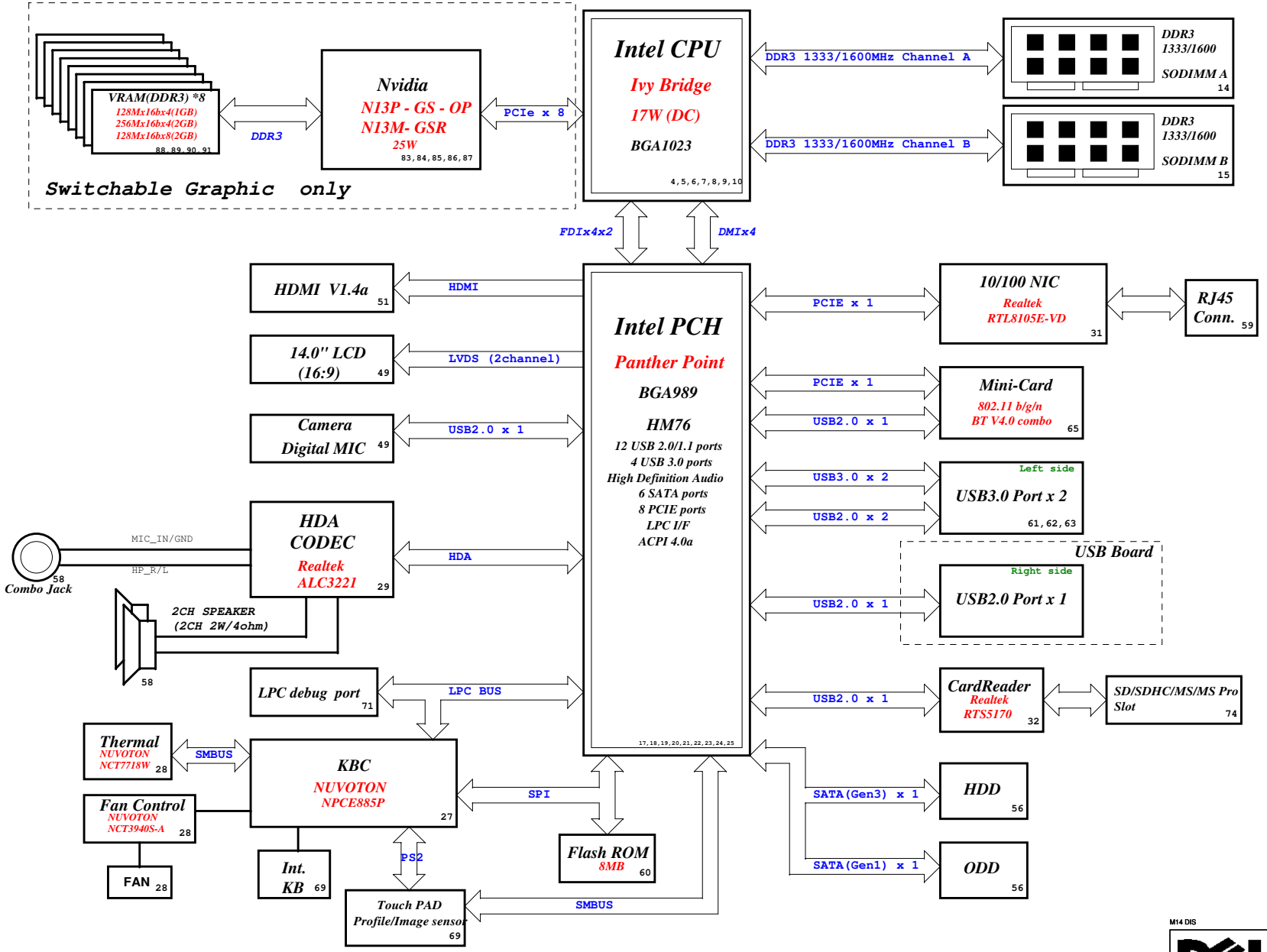

CHARGER BQ24727	40
INPUTS	OUTPUTS
AD+ BT+	DCBATOUT

SYSTEM DC/DC TPS51225	41
INPUTS	OUTPUTS
DCBATOUT	3D3V_AUX_S5 5V_AUX_S5 5V_S5 3D3V_S5

CPU Core/NB Power ISL95833	42~44
INPUTS	OUTPUTS
DCBATOUT	VCC_CORE VCC_GFXCORE

DDR3 SUS TPS51216	46
INPUTS	OUTPUTS
DCBATOUT	1D5V_S3

DDR3 VTT TPS51216	46
INPUTS	OUTPUTS
DCBATOUT	0D75V_S0

CPU VCCP_CPU TPS51219	45
INPUTS	OUTPUTS
DCBATOUT	1D05V_S0

Intel PCH 1D8V_S0 SYW231	47
INPUTS	OUTPUTS
3D3V_S5	1D8V_S0

Intel CPU_VCCSA TPS51463	48
INPUTS	OUTPUTS
5V_S5	0D85V_S0

Nvidia VGA_CORE ADP3211MNR2G	92
INPUTS	OUTPUTS
DCBATOUT	VGA_CORE

Switches 36 93	
INPUTS	OUTPUTS
1D5V_S3	1D5V_S0
5V_S5	5V_S0
3D3V_S5	3D3V_S0
VCCP_CPU	1D05V_VGA_S0
3D3V_S0	3D3V_VGA_S0
1D5V_S3	1D5V_VGA_S0

PCB LAYER

L1:Top	L4:Signal
L2:VCC	L5:GND
L3:Signal	L6:Bottom

M14 DIS

Wistron Corporation
21F, 88, Sec.1, Hsin Tai Wu Rd., Hsichih,
Taipei Hsien 221, Taiwan, R.O.C.

Title	Block Diagram	
Size C	Document Number OAK14 Chief River DIS	Rev A00
Date: Wednesday, September 05, 2012	Sheet 2 of 105	

PCH Strapping

Chief River Schematic Checklist Revision 1.5

Name	Schematics Notes
SPKR	The signal has a weak internal pull-down. Note: the internal pull-down is disabled after PLTRST# deasserts. If the signal is sampled high, this indicates that the system is strapped to the "No Reboot" mode (Panther Point will disable the TCO Timer system reboot feature).
INIT3_3V#	This signal has a weak internal pull-up. Note: The internal pull-up is disabled after PLTRST# deasserts. NOTE: This signal should not be pulled low. Leave as "No Connect".
INTVRMEN	Integrated 1.05 V VRM Enable / Disable. Integrated 1.05 V VRMs is enabled when high NOTE: This signal should always be pulled high External 1.05 V VRM Enable / Disable. Integrated 1.05 V VRMs is enabled when Low. NOTE: This signal should be pulled down to GND through 330 kOhms resistor
GNT3#/GPIO55 GNT2#/GPIO53 GNT1#/GPIO51	GNT[3:0]# functionality is not available on Mobile. Used as GPIO only. Pull-up resistors are not required on these signals. If pull-ups are used, they should be tied to the Vcc3_3 power rail.
DF_TVS	This signal is a strap for selecting DMI and FDI termination voltage. For Ivy Bridge processor only implementation: DF_TVS needs to be pulled up to VccDFTERM power rail through 2.2 kOhms ±5% resistor. For future processor compatibility: It needs to be connected to PROC_SELECT through a 1.0 kOhms ±5% series resistor. The PROC_SELECT signal would need a 2.2 kOhms ±5% pull-up resistor to PCH VccDFTERM.
SATA1GP/ GPIO19	Bit11 Bit 10 Boot BIOS Destination 0 1 Reserved 1 0 PCI 1 1 SPI 0 0 LPC NOTE: If option 00 LPC is selected BIOS may still be placed on LPC, but all platforms with Panther Point require SPI flash connected directly to the Panther Point's SPI bus with a valid descriptor in order to boot. NOTE: Booting to PCI is intended for debut/testing only. Boot BIOS Destination Select to LPC/PCI by functional strap or via Boot BIOS Destination Bit will not affect SPI accesses initiated by Management Engine or Integrated GbE LAN. NOTE: PCI Boot BIOS destination is not supported on mobile.
SATA2GP/ GPIO36	Reserved. This signal has a weak internal pull-down. NOTE: The internal pull-down is disabled after PLTRST# deasserts. NOTE: This signal should not be pulled high when strap is sampled.
SATA3GP/ GPIO37	Reserved This signal has a weak internal pull-down. NOTE: The internal pull-down is disabled after PLTRST# deasserts. NOTE: This signal should not be pulled high when strap is sampled.
HDA_DOCK_EN# /GPIO33	High Definition Audio Dock Enable: This signal controls the external Intel HD Audio docking isolation logic. This is an active-low-signal. When deasserted the external docking switch is in isolate mode. When asserted the external docking switch electrically connects the IntelR HD Audio dock signals to the corresponding Panther Point signals. This signal can instead be used as GPIO33.
HDA_SDO	Signal has a weak internal pull-down. If strap is sampled low, the security measures defined in the Flash Descriptor will be in effect (default).If sampled high, the Flash Descriptor Security will be overridden. This strap should only be asserted high via external pull-up in manufacturing/debug environments ONLY. Note: The weak internal pull-down is disabled after PLTRST# deasserts. Asserting the HDA_SDO high on the rising edge of PWROK will also halt Intel Management Engine after chipset bring up and disable runtime Intel Management Engine features. This is a debug mode and must not be asserted after manufacturing/ debug.This signal has a 20k internal pull down resistor.
HDA_SYNC	This signal has a weak internal pull-down. On Die PLL VR is supplied by 1.5 V from VCCVRM when sampled high, 1.8 V from VCCVRM when sampled low. Needs to be pulled High for Chief River platform. Note: HDA_SYNC signal also serves as a strap for selecting VRM voltage to the PCH. The strap is sampled on the rising edge of RSMRST# signal. Due to potential leakage on the codec (path to GND), the strap may not be able to achieve the Vihmin at PCH input.Therefore, platform may need to isolate this signal from the codec during the strap phase. Refer to the example circuits provided in the latest Chief River platform design guide.
GPIO15	TLS Confidentiality Low (0) - Intel ME Crypto Transport Layer Security (TLS) cipher suite with no confidentiality High (1) - Intel ME Crypto Transport Layer Security (TLS) cipher suite with confidentiality This signal has a weak internal pull-down. NOTE:The weak internal pull-down is disabled after RSMRST# deasserts. NOTE: A strong pull-up may be needed for GPIO functionality
L_DDC_DATA	LVDS Detected. When '1'- LVDS is detected; When '0'- LVDS is not detected. This signal has a weak internal pull-down. NOTE:The internal pull-down is disabled after PLTRST# deasserts.
SDVO_CTRLDATA	Port B Detected When '1'- Port B is detected; When '0'- Port B is not detected This signal has a weak internal pull-down. NOTE:The internal pull-down is disabled after PLTRST# deasserts.
DDPC_CTRLDATA	Port C Detected. When '1'- Port C is detected; When '0'- Port C is not detected This signal has a weak internal pull-down. NOTE:The internal pull-down is disabled after PLTRST# deasserts.
DDPD_CTRLDATA	Port D Detected. When '1'- Port D is detected; When '0'- Port D is not detected This signal has a weak internal pull-down. NOTE:The internal pull-down is disabled after PLTRST# deasserts.
GPIO28	The On-Die PLL voltage regulator is enabled when sampled high. When sampled low the On-Die PLL Voltage Regulator is disabled.If not used, 8.2-kΩ to 10-kΩ pull-up to +V3.3A power-rail. GPIO28 signal also needs to be pulled up to 3.3V_SUS with 4.7K resistor to ensure proper strap setting when use as the chipset test interface.Refer to the latest platform debug design guide and platform design guide for more details. NOTE:This signal has a weak internal pull-up. The internal pull-up is disabled after RSMRST# deasserts.
GPIO29/ SLP_LAN#	GPIO29 is multiplexed with SLP_LAN#. If Intel LAN is implemented on the platform, SLP_LAN# must be used to control the power to the PHY LAN (no other implementation is supported). If integrated Intel LAN is not supported on the platform, GPIO29 can be used as a normal GPIO. A soft strap determines the functionality of GPIO29, either as SLP_LAN# or GPIO. By default, the soft strap enables SLP_LAN# functionality on the pin. If the soft trap is changed to enable GPIO functionality, then SLP_LAN# functionality is no longer available, and the signal can be used as a normal GPIO (default to GPI).

Processor Strapping

Chief River Schematic Checklist Revision 1.5

Pin Name	Strap Description	Configuration (Default value for each bit is 1 unless specified otherwise)	Default Value
CFG[0]		Connect a series 1 kOhms resistor on the critical CFG[0] trace in a manner which does not introduce any stubs to CFG[0] trace. Route as needed from the opposite side of this series isolation resistor to the debug port. ITP will drive the net to GND.	
CFG[2]	**PCIe Static x16 Lane Numbering Reversal.**	1: Normal Operation; Lane # definition matches socket pin map definition 0:Lane Reversed	1
CFG[4]	**Display Port Presence strap**	1:Disabled - No Physical Display Port attached to Embedded DisplayPort No connect for disable 0:Enabled - An external Display Port device is connected to the Embedded Display Port Pull-down to GND through a 1KΩ ± 5% resistor to enable port	1
CFG[6:5]	**PCIE Port Bifurcation Straps**	00 = 1 x 8, 2 x 4 PCI Express 01 = reserved 10 = 2 x 8 PCI Express 11 = 1 x 16 PCI Express	1
CFG[17:7]	**Reserved configuration lands. A test point may be placed on the board for these lands.**		

Power Plane

POWER PLANE	VOLTAGE	Voltage Rails ACTIVE IN	DESCRIPTION
5V_S0 3D3V_S0 1D8V_S0 1D5V_S0 1D05V_VTT 0D85V_S0 0D75V_S0 VCC_CORE VCC_GFXCORE 1D8V_VGA_S0 3D3V_VGA_S0 1V_VGA_S0	5V 3.3V 1.8V 1.5V 1.05V 0.95 - 0.85V 0.75V 0.35V to 1.5V 0.4 to 1.25V 1.8V 3.3V 1V	S0	CPU Core Rail Graphics Core Rail
5V_USBX_S3 1D5V_S3 DDR_VREF_S3	5V 1.5V 0.75V	S3	
BT+ DCBATOUT 5V_S5 5V_AUX_S5 3D3V_S5 3D3V_AUX_S5	6V-14.1V 6V-14.1V 5V 5V 3.3V 3.3V	All S states	AC Brick Mode only
3D3V_LAN_S5	3.3V	WOL_EN	Legacy WOL
3D3V_AUX_KBC	3.3V	DSW, Sx	ON for supporting Deep Sleep states
3D3V_AUX_S5	3.3V	G3, Sx	Powered by Li Coin Cell in G3 and +V3ALW in Sx

Sandy Bridge + Ivy Bridge Compatibility Requirements

Chief River Schematic Checklist Revision 1.5

Pin Name	Configuration	Schematic Notes
DDR3 VREF	**Sandy Bridge + Ivy Bridge**	DDR3 VREF M1 and M3 Guidelines are required. Note: The M3 traces are routed to the Sandy Bridge Processor reserved pins.
	Ivy Bridge	No change.
PROC_SELECT# & DF_TVS	**Sandy Bridge + Ivy Bridge**	Connect DF_TVS signal of the PCH to PROC_SELECT# of the processor through a 1K±5% series resistor. PROC_SELECT# also needs a 2.2K±5% pull up resistor to PCH VccDFTERM rail.
	Ivy Bridge	No change.
VCCIO VR Implementation	**Sandy Bridge + Ivy Bridge**	The POR for Ivy Bridge mobile parts is now 1.05 V. There is no longer a requirement for a separate VCCIO VR for Sandy Bridge + Ivy Bridge compatibility.
	Ivy Bridge	No change.
VCCSA_SEL connection to VCCSA_VID[1:0] lines	**Sandy Bridge + Ivy Bridge**	VCCSA_SELECT[0:1] which should be connected to VID[1:0] of the System Agent (SA) VR controller.
	Ivy Bridge	No change.
Layout Requirement on PCI Express Gen3	**Sandy Bridge + Ivy Bridge**	The total motherboard length for a pair of consecutive PCI Express Tx lanes be length matched within 100 mils (2.54 mm)
	Ivy Bridge	No change.
GT Core VR Implementation	**Sandy Bridge + Ivy Bridge**	Depending on the PDDG specifications, some IVB GT2 SKUs may require a new VR controller and 2 phase VCC GT core VR.
	Ivy Bridge	No change.
Processor PCI Express Graphics Guidelines	**Sandy Bridge + Ivy Bridge (PCIe Gen3):**	To support Gen 3 PCI Express Graphic, the value of the AC coupling capacitor should be 180 - 265 nF.
	Ivy Bridge	No change.

PCIE Routing

LANE1	X
LANE2	X
LANE3	Mini Card1(WLAN)
LANE4	x
LANE5	X
LANE6	Onboard LAN
LANE7	X
LANE8	X

USB Table

Pair	Device
0	USB3.0 port1
1	USB3.0 port2, with Debug Port
2	USB2.0 port3
3	X
4	X
5	Touch Panel
6	HM76 NC
7	HM76 NC
8	X
9	X
10	CARD READER
11	Mini Card (WLAN)
12	X
13	CAMERA

SATA Table

SATA	
Pair	Device
0	HDD1
1	X
2	X
3	X
4	ODD1
5	X

M14 DIS

Wistron Corporation
21F, 88, Sec.1, Hsin Tai Wu Rd., Hsichih,
Taipei Hsien 221, Taiwan, R.O.C.

Title: Table of Content

Size: A2 | Document Number: OAK14 Chief River DIS | Rev: A00

Date: Wednesday, September 05, 2012 | Sheet 3 of 105

SSID = CPU

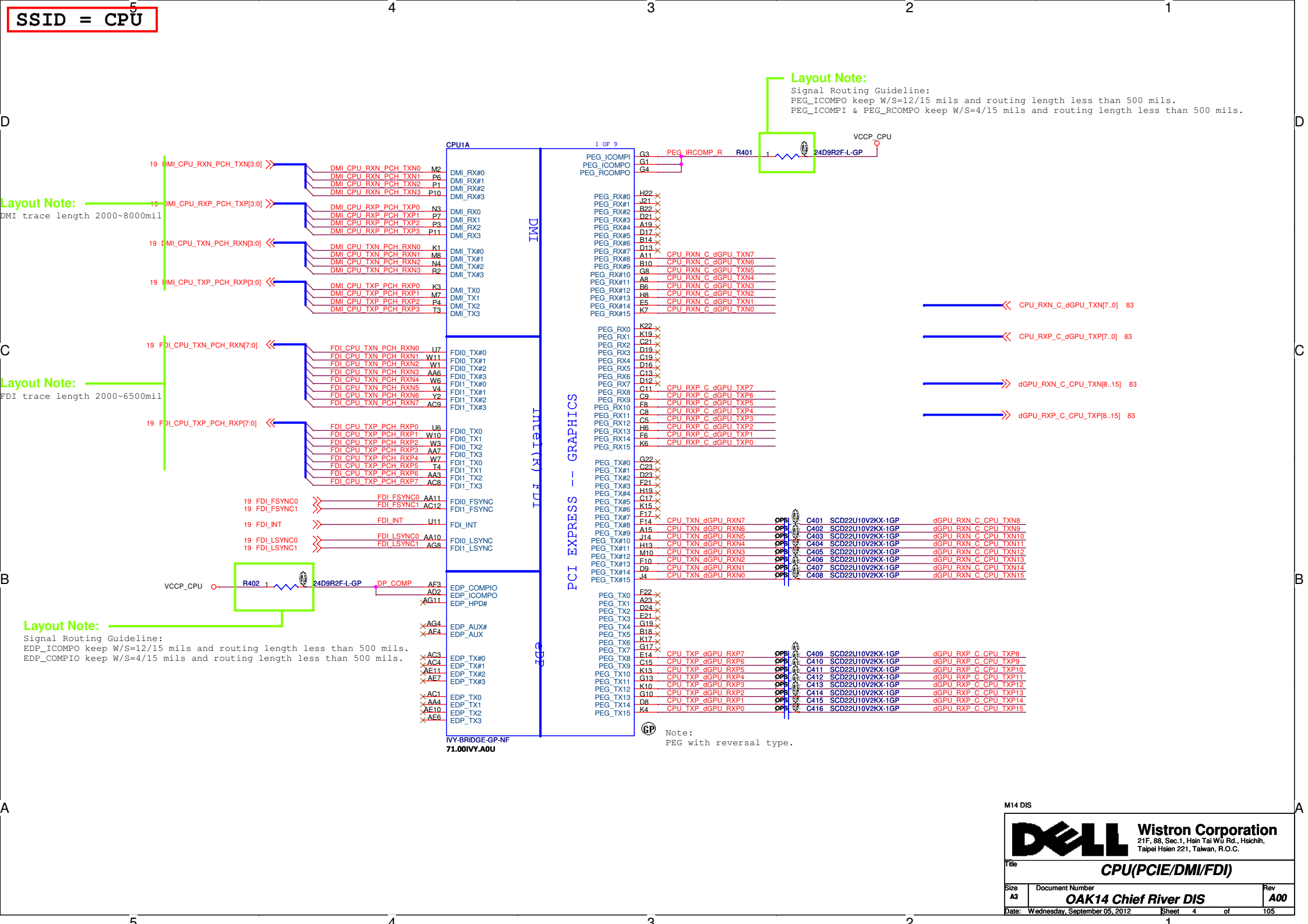

M14 DIS

Wistron Corporation
21F, 88, Sec.1, Hsin Tai Wu Rd., Hsichih,
Taipei Hsien 221, Taiwan, R.O.C.

Title: CPU(PCIE/DMI/FDI)

Size: A3 | Document Number: OAK14 Chief River DIS | Rev: A00

Date: Wednesday, September 05, 2012 | Sheet 4 of 105

SSID = CPU

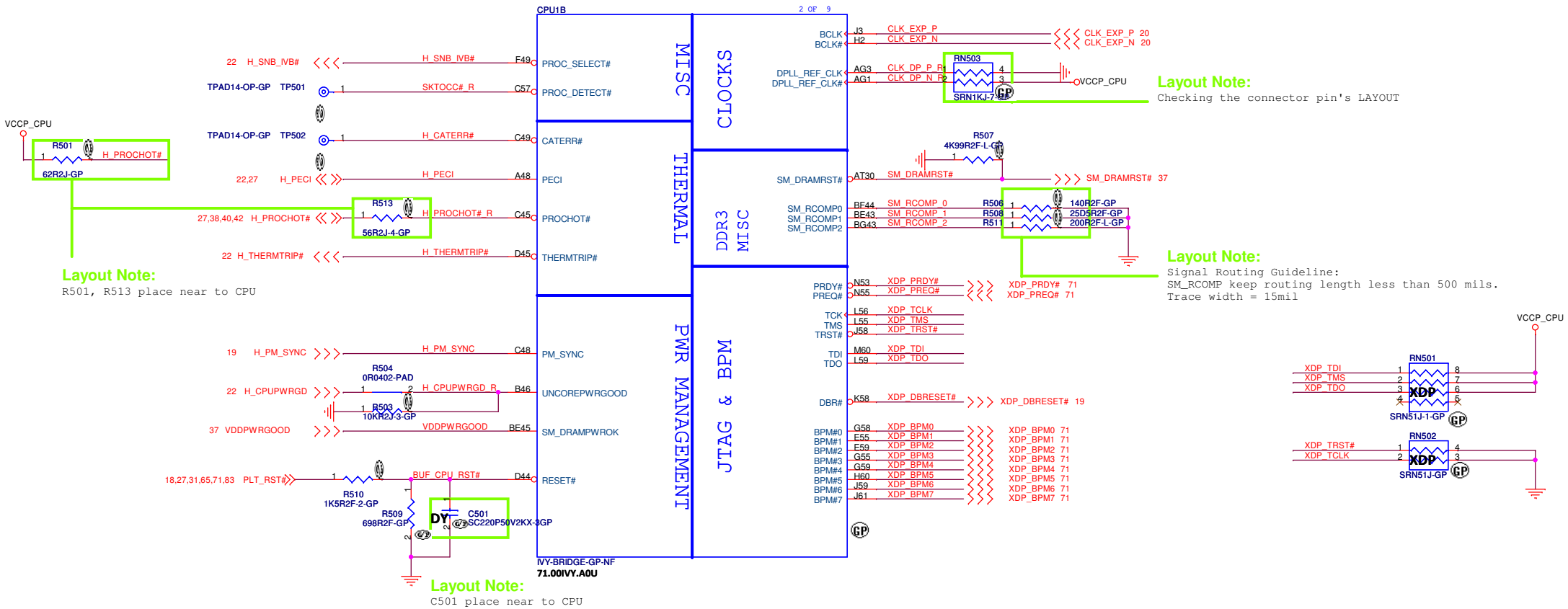

Layout Note:
Checking the connector pin's LAYOUT

Layout Note:
R501, R513 place near to CPU

Layout Note:
Signal Routing Guideline:
SM_RCOMP keep routing length less than 500 mils.
Trace width = 15mil

Layout Note:
C501 place near to CPU

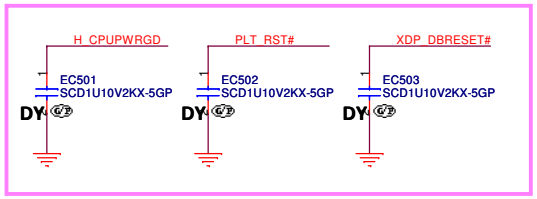

reserve for EMI Request

M14 DIS

Wistron Corporation
21F, 88, Sec.1, Hsin Tai Wu Rd., Hsichih,
Taipei Hsien 221, Taiwan, R.O.C.

Title: **CPU(THERMAL/CLOCK/PM)**

Size	Document Number	Rev
A3	OAK14 Chief River DIS	A00

Date: Wednesday, September 05, 2012 Sheet 5 of 105

SSID = CPU

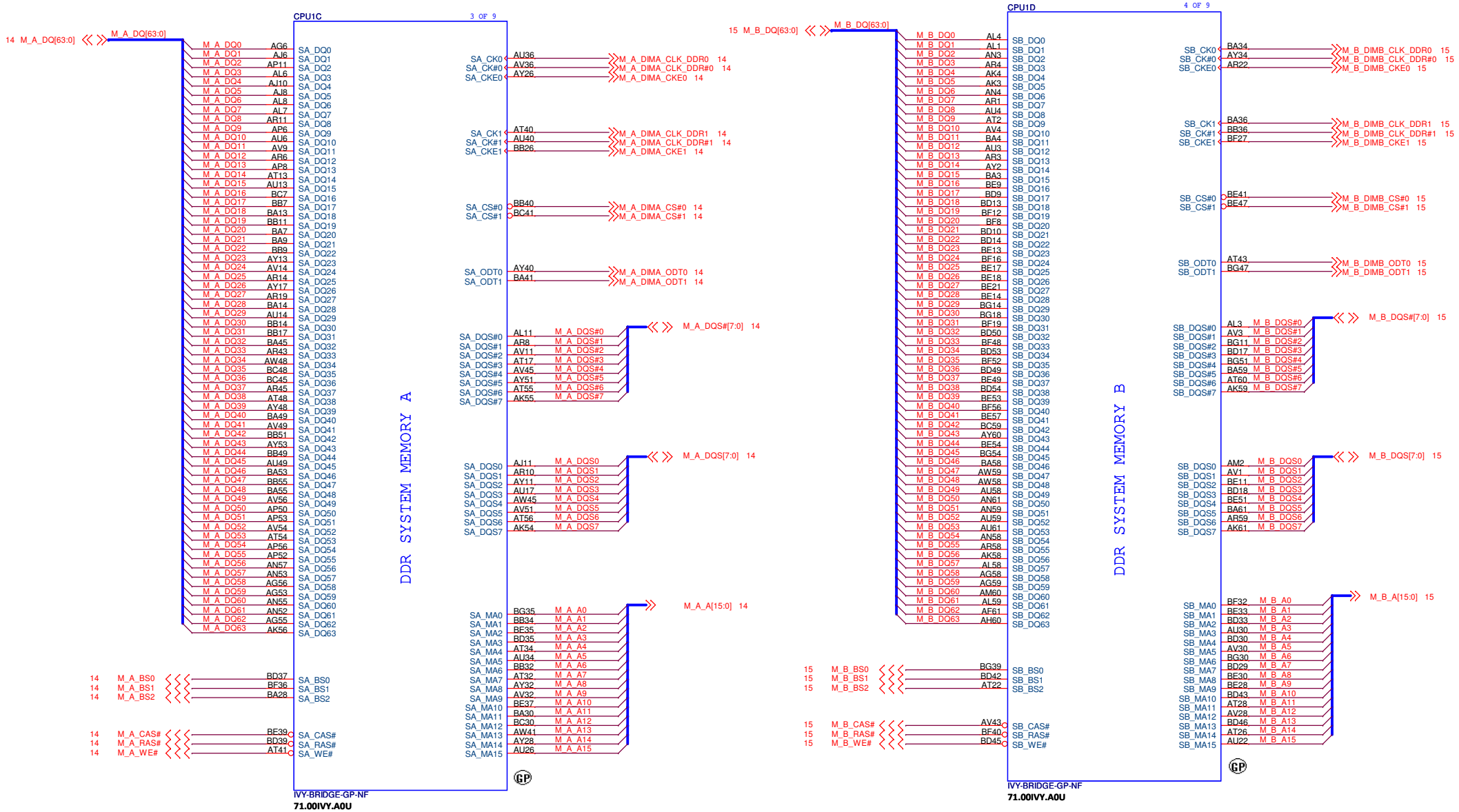

M14 DIS

Wistron Corporation
21F, 88, Sec.1, Hsin Tai Wu Rd., Hsichih,
Taipei Hsien 221, Taiwan, R.O.C.

Title: **CPU (DDR)**

Size: A3 | Document Number: **OAK14 Chief River DIS** | Rev: **A00**

Date: Wednesday, September 05, 2012 | Sheet 6 of 105

SSID = CPU

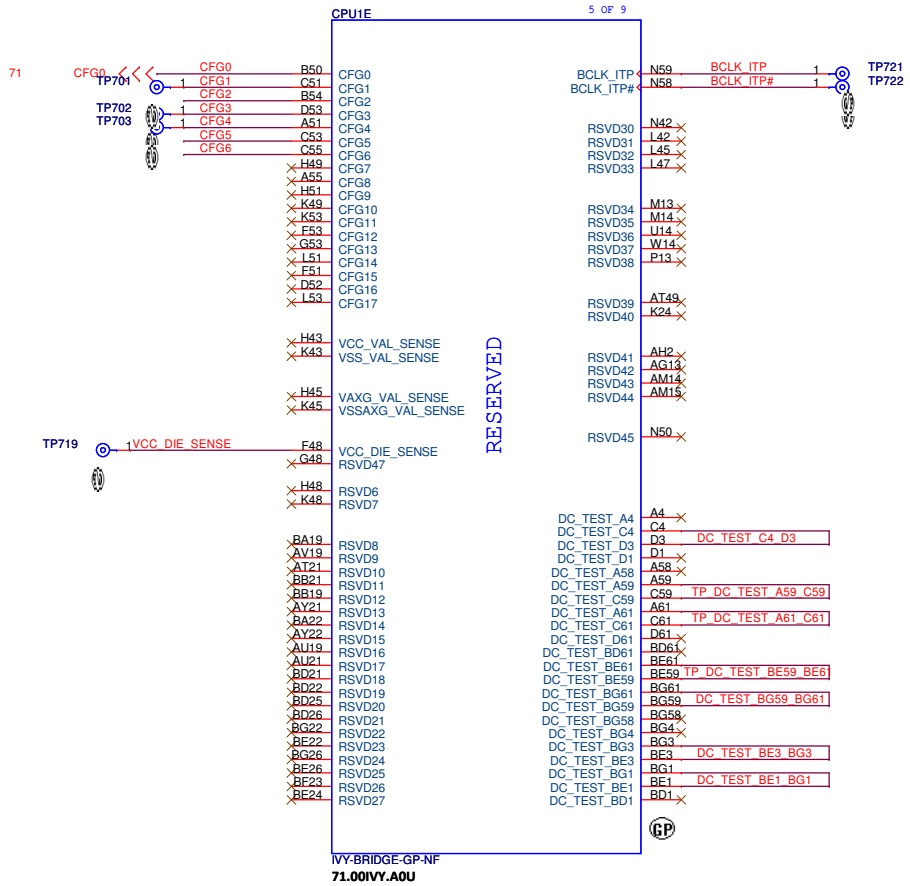

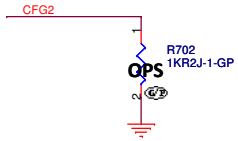

PEG Static Lane Reversal	
CFG[2]	1: Normal Operation; Lane # definition matches socket pin map definition
	0:Lane Reversed

Display Port Presence Strap	
CFG[4]	1: Disabled; No Physical Display Port attached to Embedded Display Port
	0: Enabled; An external Display Port device is connected to the Embedded Display Port

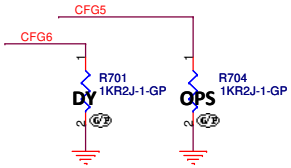

PCIE Port Bifurcation Straps	
CFG[6:5]	11: 1x16 PCI Express
	10: 2 x8 - PCI Express
	01: Reserved
	00: 1x8, 2x4 PCI Express

M14 DIS

Wistron Corporation
21F, 88, Sec.1, Hsin Tai Wu Rd., Hsichih,
Taipei Hsien 221, Taiwan, R.O.C.

Title: CPU (RESERVED)

Size: A3 | Document Number: OAK14 Chief River DIS | Rev: A00

Date: Wednesday, September 05, 2012 | Sheet 7 of 105

SSID = CPU

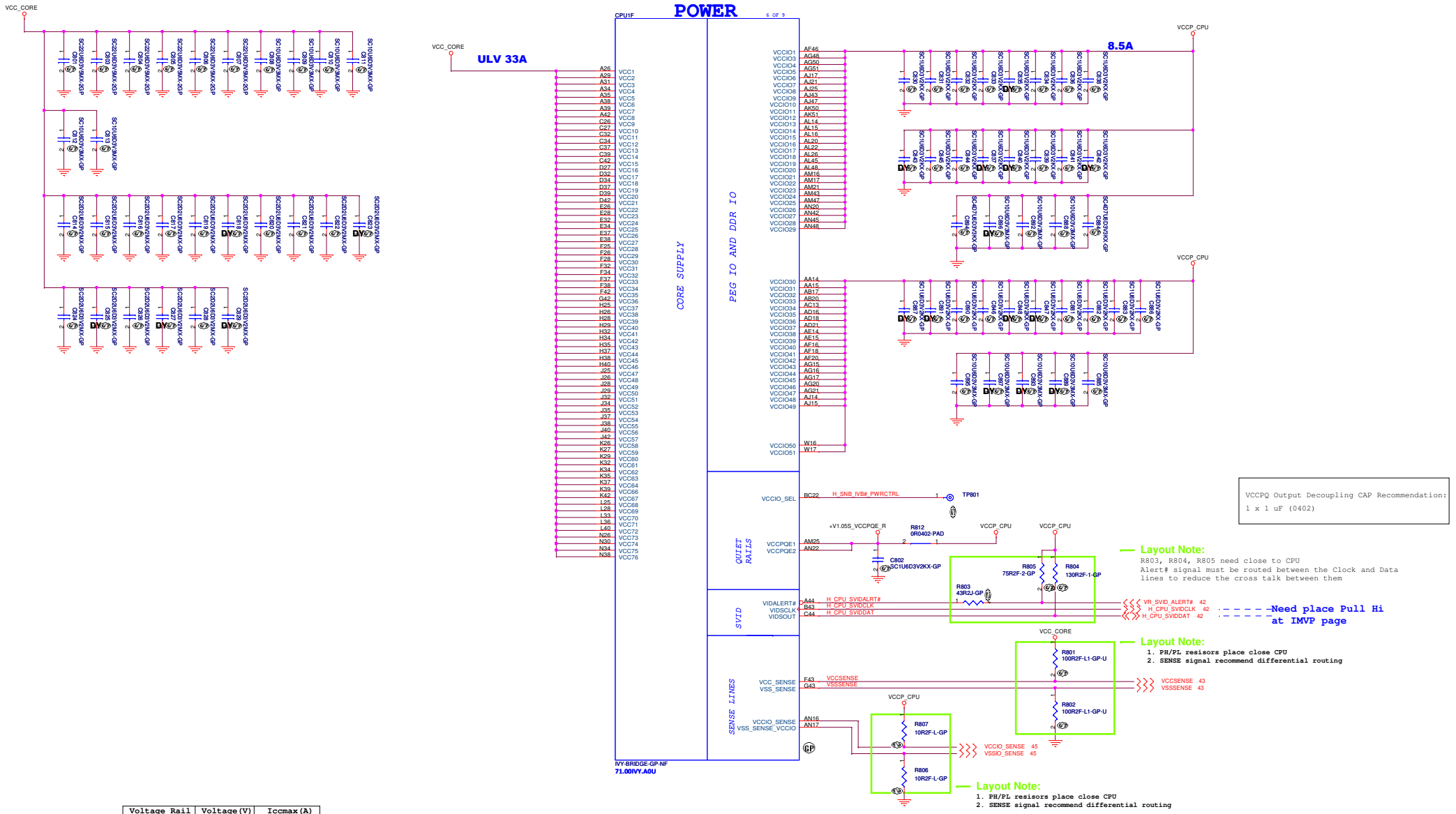

VCCPQ Output Decoupling CAP Recommendation:
1 x 1 uF (0402)

Voltage Rail	Voltage(V)	Iccmax(A)
VCC_CORE	0.3~1.52	33
VAXG	0~1.52	29 (GT2)
VCCIO	1.05	8.5
VDDQ	1.5	5
VCCSA	0.675~0.9	4
VCCPLL	1.8	1.2

Refer to CPU EDS V.1.7.5

M14 DIS

Wistron Corporation
21F, 88, Sec.1, Hsin Tai Wu Rd., Hsichih, Taipei Hsien 221, Taiwan, R.O.C.

Title: CPU (VCC_CORE)

Size: A2 | Document Number: OAK14 Chief River DIS | Rev: A00

Date: Wednesday, September 05, 2012 | Sheet 8 of 105

SSID = CPU

Voltage Rail	Voltage(V)	Iccmax(A)
VCC_CORE	0.3~1.52	33
VAXG	0~1.52	29 (GT2)
VCCIO	1.05	8.5
VDDQ	1.5	5
VCCSA	0.675~0.9	3
VCCPLL	1.8	1.2

Refer to CPU EDS V2.0

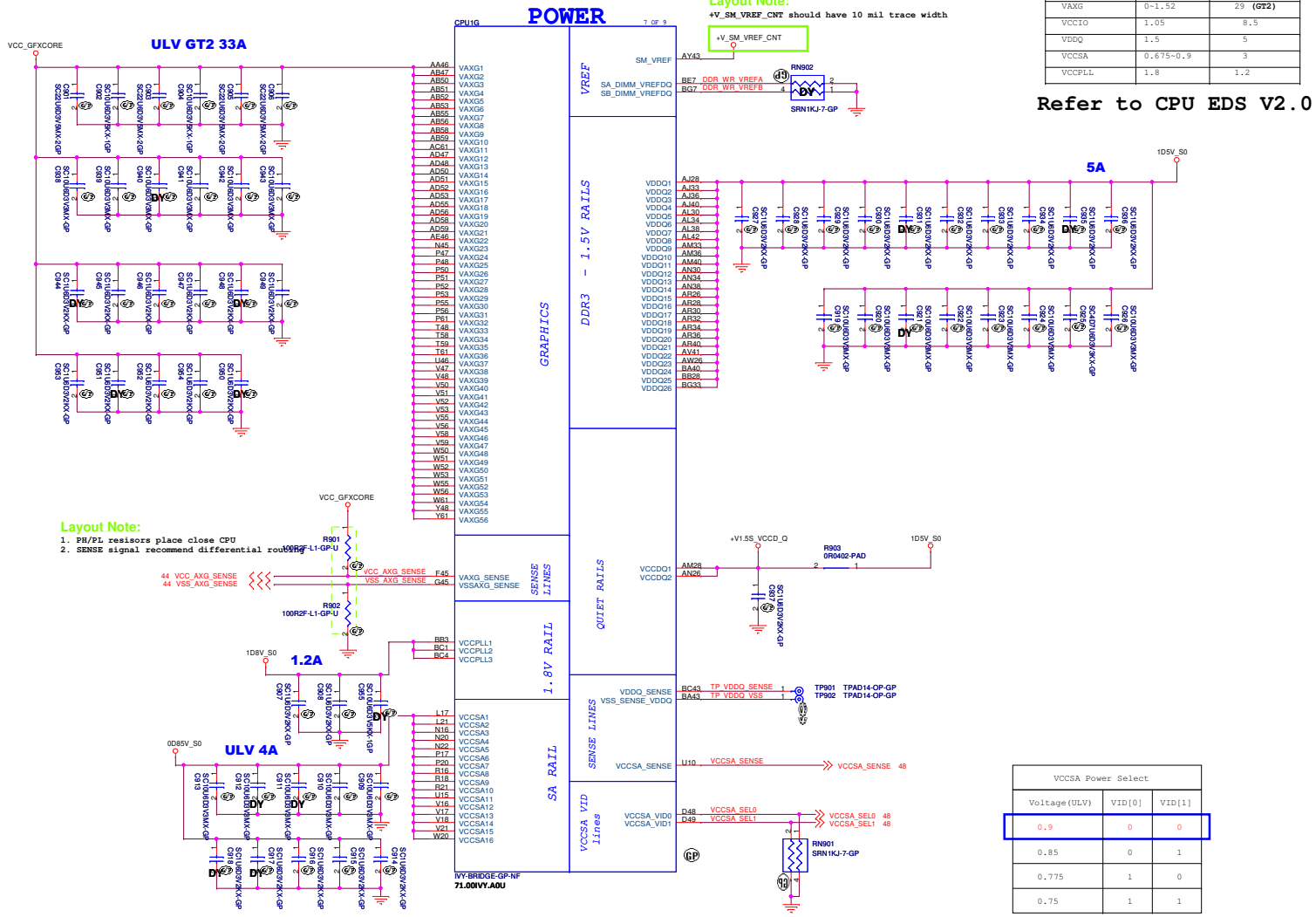

VCCSA Power Select		
Voltage(ULV)	VID[0]	VID[1]
0.9	0	0
0.85	0	1
0.775	1	0
0.75	1	1

M14 DIS

Wistron Corporation
21F, 88, Sec.1, Hsin Tai Wu Rd., Hsichih,
Taipei Hsien 221, Taiwan, R.O.C.

Title: CPU (VCC_GFXCORE)

Size: A2 | Document Number: OAK14 Chief River DIS | Rev: A00

Date: Wednesday, September 05, 2012 | Sheet 9 of 105

SSID = CPU

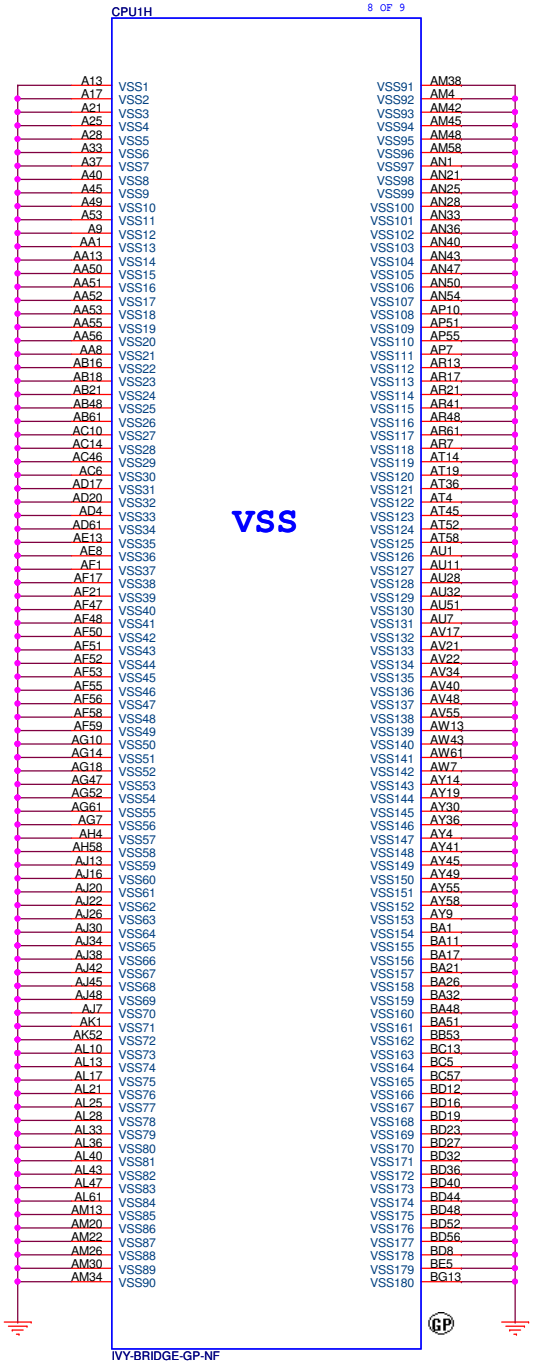

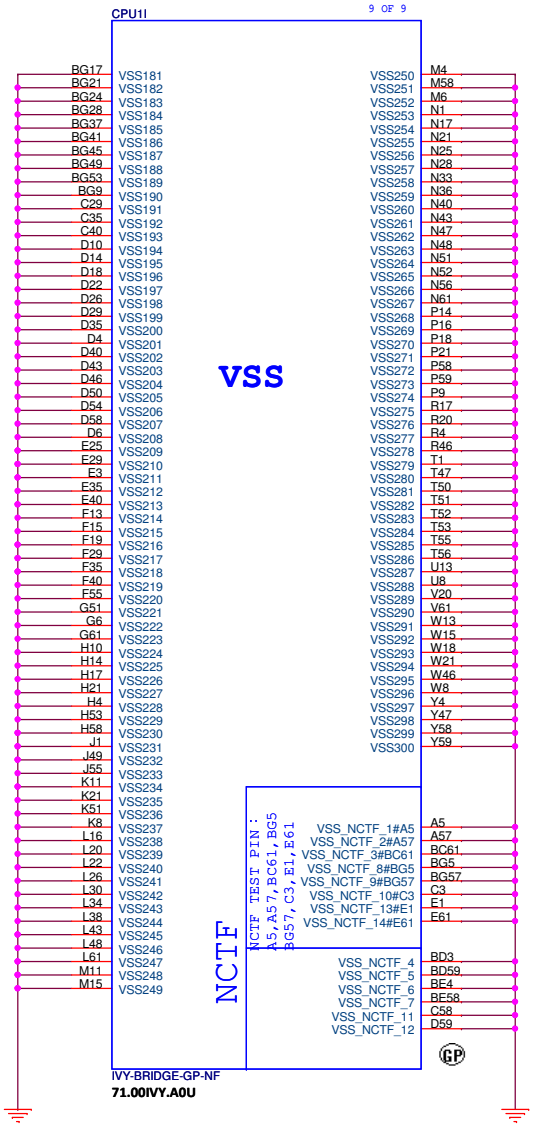

M14 DIS

Wistron Corporation
21F, 88, Sec.1, Hsin Tai Wu Rd., Hsichih,
Taipei Hsien 221, Taiwan, R.O.C.

Title: CPU (VSS)

Size: A3 | Document Number: OAK14 Chief River DIS | Rev: A00

Date: Wednesday, September 05, 2012 | Sheet 10 of 105

(Blanking)

M14 DIS

Wistron Corporation
21F, 88, Sec.1, Hsin Tai Wu Rd., Hsichih,
Taipei Hsien 221, Taiwan, R.O.C.

Title: XDP

Size: A3

Document Number: OAK14 Chief River DIS

Rev: A00

Date: Wednesday, September 05, 2012

(Blanking)

M14 DIS

Wistron Corporation
21F, 88, Sec.1, Hsin Tai Wu Rd., Hsichih,
Taipei Hsien 221, Taiwan, R.O.C.

Title: *Reserved*

Size: A3 | Document Number: *OAK14 Chief River DIS* | Rev: *A00*

Date: Wednesday, September 05, 2012 | Sheet 12 of 105

(Blanking)

M14 DIS

Wistron Corporation
21F, 88, Sec.1, Hsin Tai Wu Rd., Hsichih,
Taipei Hsien 221, Taiwan, R.O.C.

Title

(Reserved)

Size	Document Number	Rev
A3	*OAK14 Chief River DIS*	*A00*

SSID = MEMORY

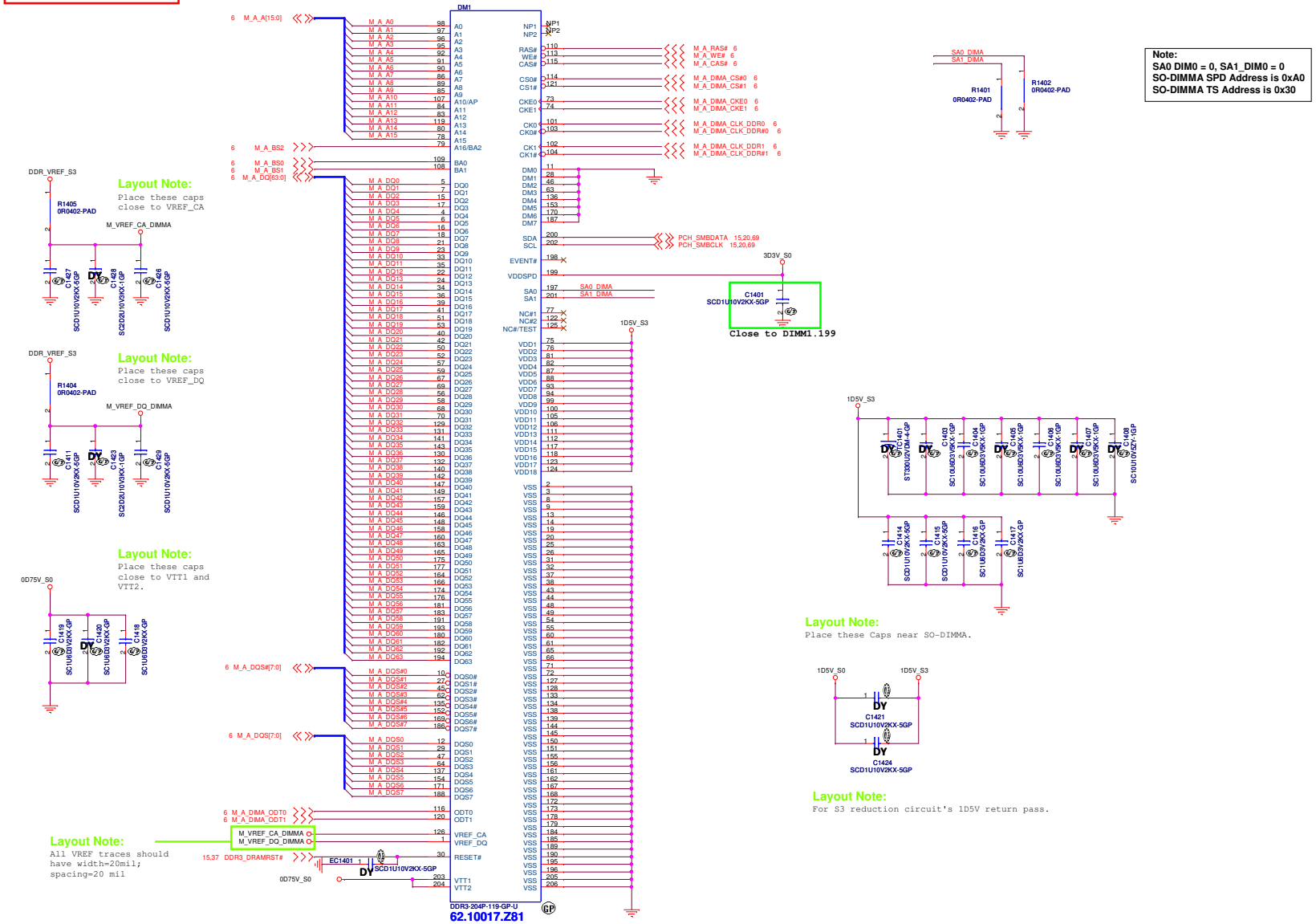

M14 DIS

Wistron Corporation
21F, 88, Sec.1, Hsin Tai Wu Rd., Hsichih,
Taipei Hsien 221, Taiwan, R.O.C.

Title: **DDR3-SODIMM1**

Size	Document Number	Rev
A2	DNE40 14 CR DIS	A00

Date: Wednesday, September 05, 2012 Sheet 14 of 105

SSID = MEMORY

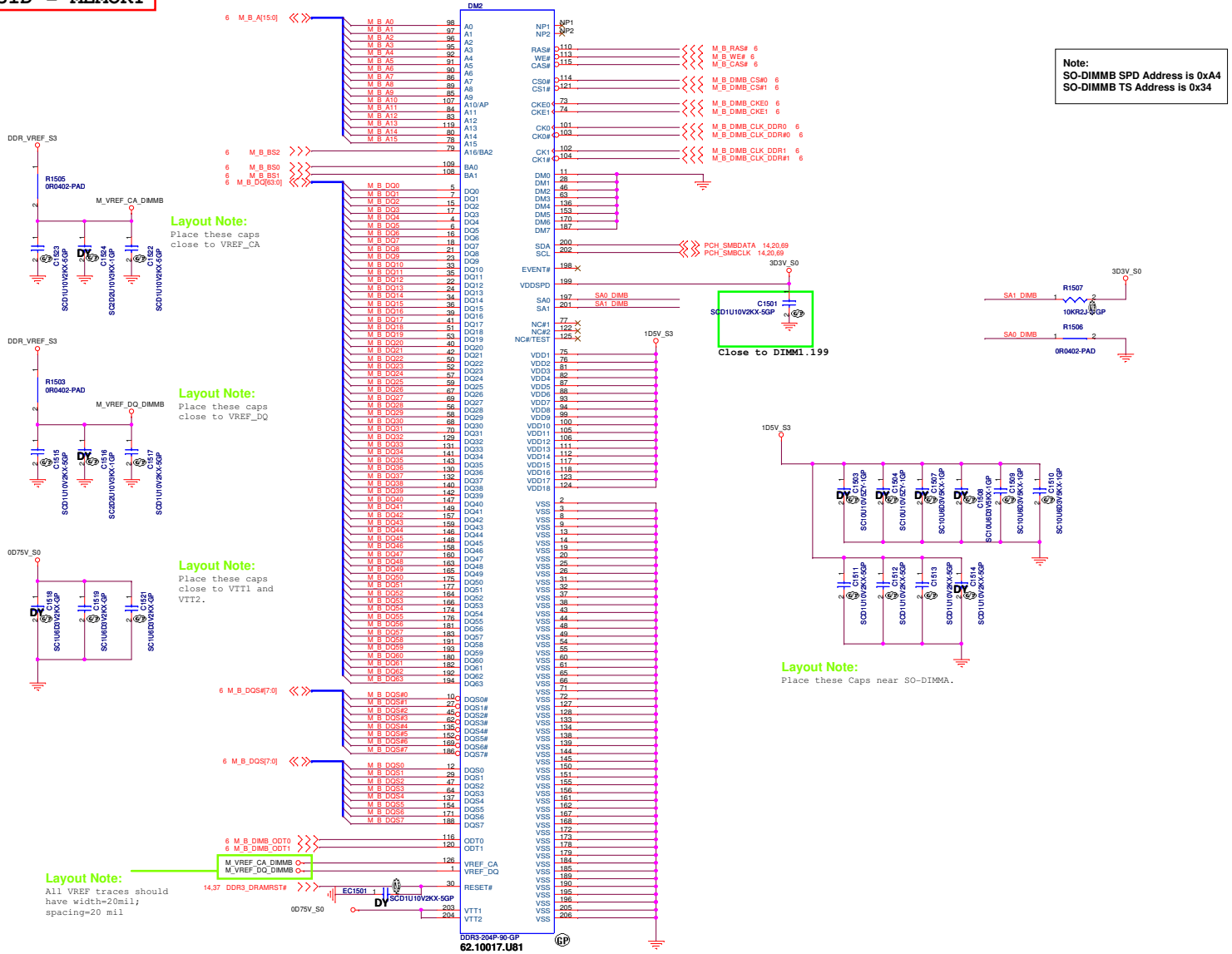

M14 DIS

Wistron Corporation
21F, 88, Sec.1, Hsin Tai Wu Rd., Hsichih,
Taipei Hsien 221, Taiwan, R.O.C.

Title: **DDR3-SODIMM2**

Size: A2 | Document Number: **OAK14 Chief River DIS** | Rev: **A00**

Date: Wednesday, September 05, 2012 | Sheet 15 of 105

(Blanking)

M14 DIS

Wistron Corporation
21F, 88, Sec.1, Hsin Tai Wu Rd., Hsichih,
Taipei Hsien 221, Taiwan, R.O.C.

Title: *Reserved*

Size	Document Number	Rev
A3	*OAK14 Chief River DIS*	*A00*

SSID = PCH

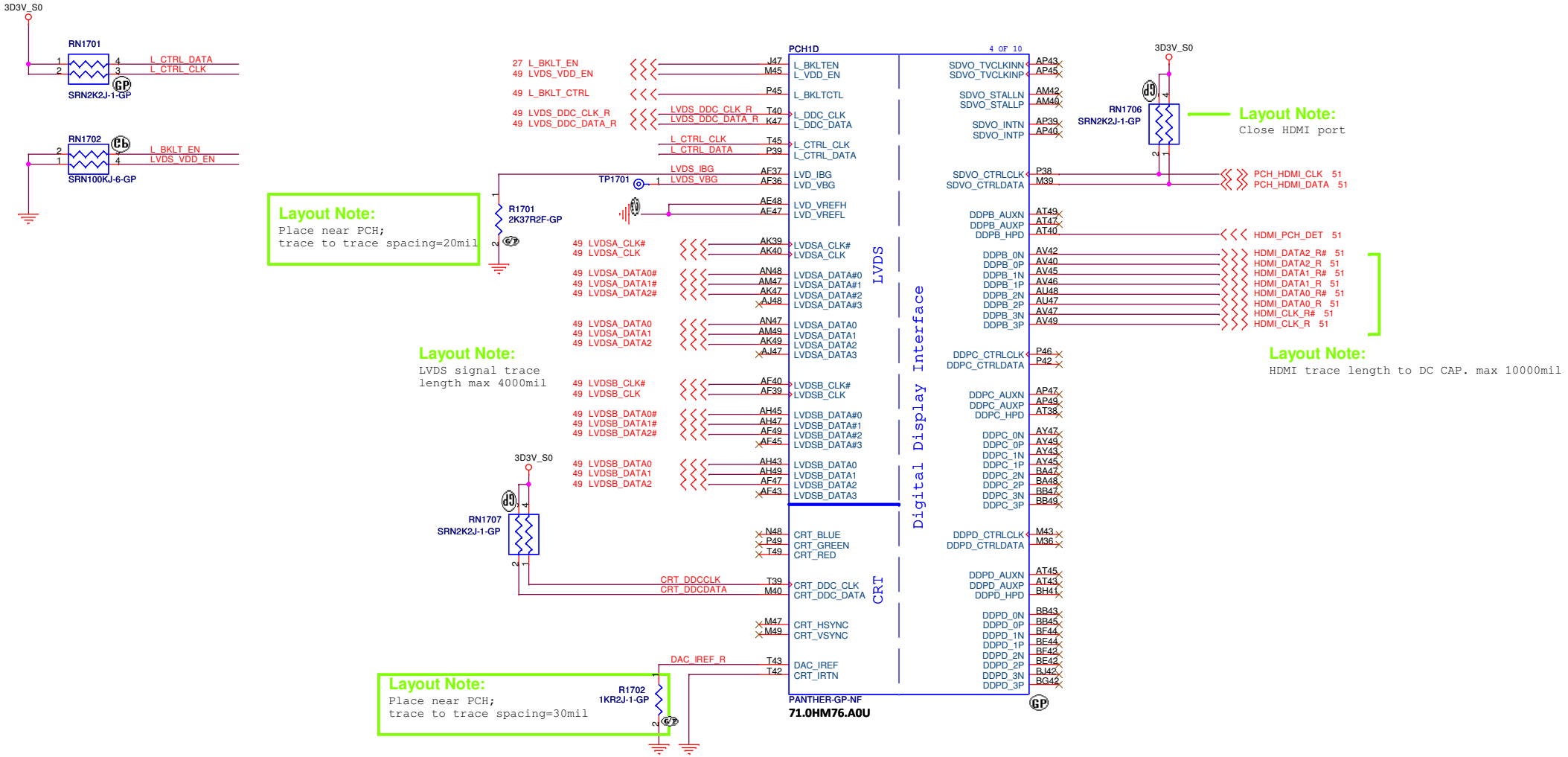

M14 DIS

Wistron Corporation
21F, 88, Sec.1, Hsin Tai Wu Rd., Hsichih,
Taipei Hsien 221, Taiwan, R.O.C.

Title	PCH (LVDS/CRT/DDI)	
Size A3	Document Number OAK14 Chief River DIS	Rev A00
Date: Wednesday, September 05, 2012	Sheet 17 of 105	

SSID = PCH

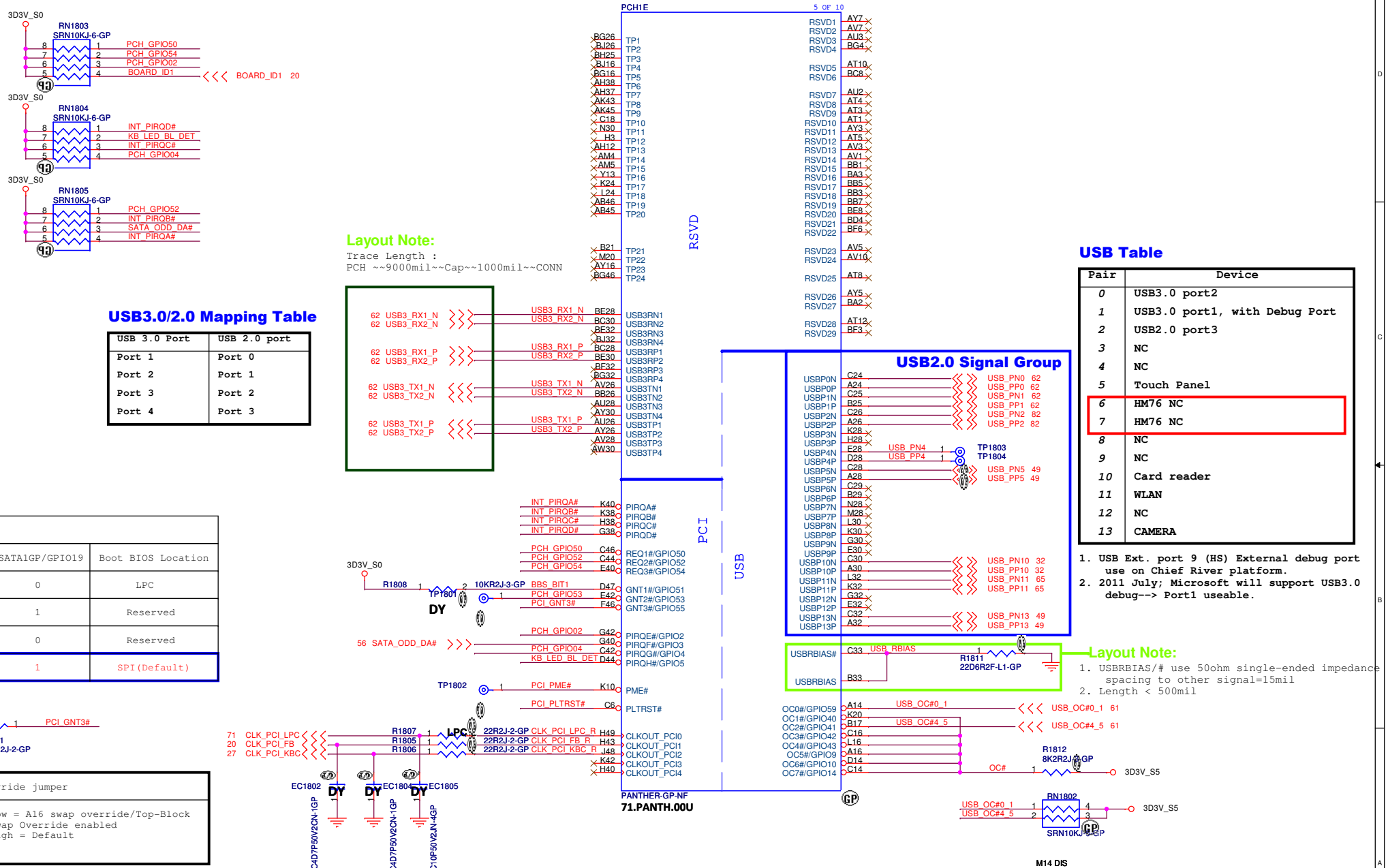

Boot Bios Strap		
GNT1#/GPIO51	SATA1GP/GPIO19	Boot BIOS Location
0	0	LPC
0	1	Reserved
1	0	Reserved
1	1	SPI(Default)

A16 Swap Override jumper	
PCI_GNT#3	Low = A16 swap override/Top-Block Swap Override enabled High = Default

USB 3.0 Port	USB 2.0 port
Port 1	Port 0
Port 2	Port 1
Port 3	Port 2
Port 4	Port 3

Pair	Device
0	USB3.0 port2
1	USB3.0 port1, with Debug Port
2	USB2.0 port3
3	NC
4	NC
5	Touch Panel
6	HM76 NC
7	HM76 NC
8	NC
9	NC
10	Card reader
11	WLAN
12	NC
13	CAMERA

1. USB Ext. port 9 (HS) External debug port use on Chief River platform.
2. 2011 July; Microsoft will support USB3.0 debug--> Port1 useable.

Layout Note:
1. USBRBIAS/# use 50ohm single-ended impedance spacing to other signal=15mil
2. Length < 500mil

SSID = PCH

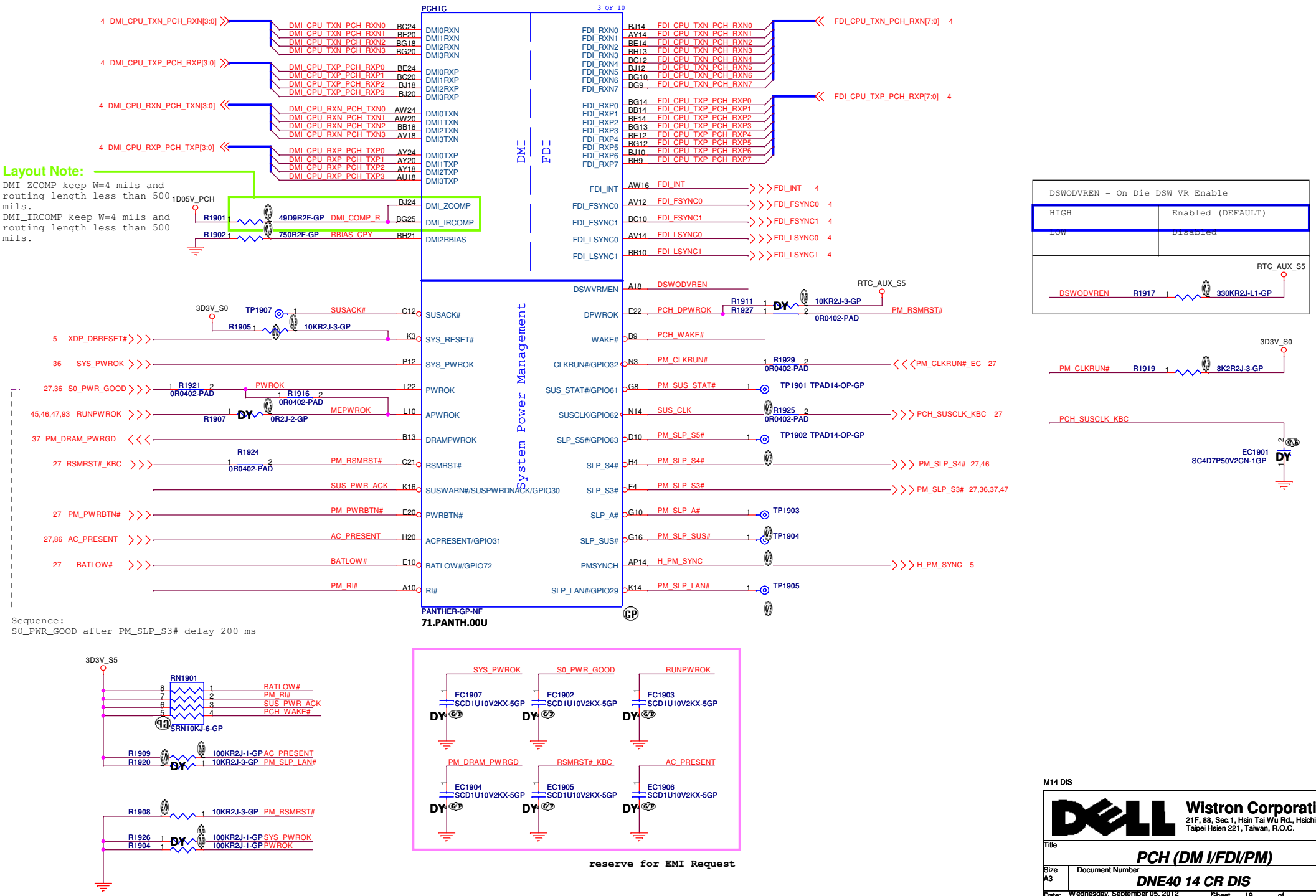
PCH1C
3 OF 10
DMI
FDI
System Power Management
PANTHER-GP-NF
71.PANTH.00U
Layout Note:
DMI_ZCOMP keep W=4 mils and routing length less than 500 mils.
DMI_IRCOMP keep W=4 mils and routing length less than 500 mils.
DSWODVREN - On Die DSW VR Enable
HIGH
Enabled (DEFAULT)
LOW
Disabled
Sequence:
S0_PWR_GOOD after PM_SLP_S3# delay 200 ms
reserve for EMI Request
M14 DIS
Wistron Corporation
21F, 88, Sec.1, Hsin Tai Wu Rd., Hsichih, Taipei Hsien 221, Taiwan, R.O.C.
Title
PCH (DM I/FDI/PM)
Size A3
Document Number
DNE40 14 CR DIS
Rev A00
Date: Wednesday, September 05, 2012
Sheet 19 of 105

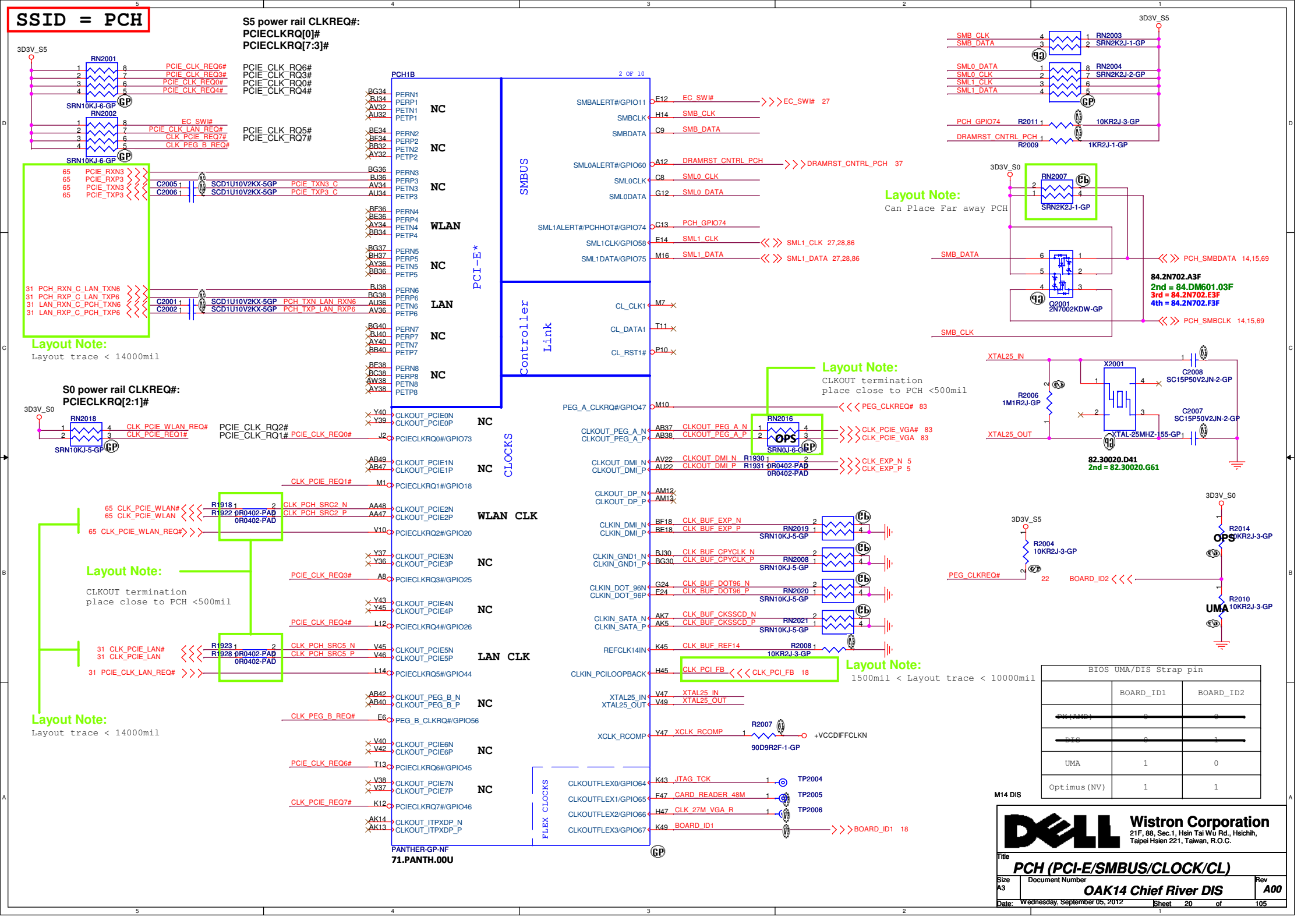
SSID = PCH
S5 power rail CLKREQ#:
PCIECLKRQ[0]#
PCIECLKRQ[7:3]#
S0 power rail CLKREQ#:
PCIECLKRQ[2:1]#
PCH1B
2 OF 10
PCI-E*
SMBUS
Controller
Link
CLOCKS
FLEX CLOCKS
PANTHER-GP-NF
71.PANTH.00U
Layout Note:
Layout trace < 14000mil
Layout Note:
CLKOUT termination
place close to PCH <500mil
Layout Note:
Can Place Far away PCH
84.2N702.A3F
2nd = 84.DM601.03F
3rd = 84.2N702.E3F
4th = 84.2N702.F3F
82.30020.D41
2nd = 82.30020.G61
Layout Note:
1500mil < Layout trace < 10000mil
BIOS UMA/DIS Strap pin
BOARD_ID1
BOARD_ID2
UMA
Optimus(NV)
M14 DIS
Wistron Corporation
21F, 88, Sec.1, Hsin Tai Wu Rd., Hsichih,
Taipei Hsien 221, Taiwan, R.O.C.
Title
PCH (PCI-E/SMBUS/CLOCK/CL)
Size A3
Document Number
OAK14 Chief River DIS
Rev A00
Date: Wednesday, September 05, 2012
Sheet 20 of 105

SSID = PCH

Integrated SUS 1V VRM Enable	
INTVRMEN	Low = External VRs High = Internal VRs★

Flash Descriptor Security Overide/ Intel ME Debug Mode	
HDA_SDOUT	Low = Default ★ High = Enable

Place at the separated point

No Reboot Strap	
HDA_SPKR	Low = Default ★ High = No Reboot

PLL ODVR VOLTAGE	
HDA_SYNC	Low = 1.8V High = 1.5V ★

HDA_SYNC:
This strap is sampled on rising edge of RSMRST# and is used to sample 1.5V VccVRM supply mode. 1K external pull-up resistor is required on this signal on the board. Signal may have leakage paths via powered off devices (Audio Codec) and hence contend with the external pull-up. A blocking FET is recommended in such a case to isolate HDA_SYNC from the Audio Codec device until after the Strap sampling is complete.

PCH1A — 1 OF 10 — PANTHER-GP-NF 71.PANTH.00U

RTC: RTCX1 (RTC_X1 A20), RTCX2 (RTC_X2 C20), RTCRST# (RTC_RST# D20), SRTCRST# (SRTC_RST# G22), INTRUDER# (SM_INTRUDER# K22), INTVRMEN (PCH_INTVRMEN C17)

IHDA: HDA_BCLK (HDA_BITCLK N34), HDA_SYNC (HDA_SYNC L34), SPKR (T10), HDA_RST# (HDA_RST# K34), HDA_SDIN0 (E34), HDA_SDIN1 (G34), HDA_SDIN2 (C34), HDA_SDIN3 (A34), HDA_SDO (HDA_SDOUT A36), HDA_DOCK_EN#/GPIO33 (PCH_GPIO33 C36), HDA_DOCK_RST#/GPIO13 (PCH_GPIO13 N32)

JTAG: JTAG_TCK (PCH_JTAG_TCK_BUF J3), JTAG_TMS (PCH_JTAG_TMS H7), JTAG_TDI (PCH_JTAG_TDI K5), JTAG_TDO (PCH_JTAG_TDO H1)

SPI: SPI_CLK (PCH_SPI_CLK T3), SPI_CS0# (PCH_SPI_CS0# Y14), SPI_CS1# (T1), SPI_MOSI (PCH_SPI_SI V4), SPI_MISO (PCH_SPI_SO U3)

LPC: FWH0/LAD0 (C38 LPC_LAD0_PCH), FWH1/LAD1 (A38 LPC_LAD1_PCH), FWH2/LAD2 (B37 LPC_LAD2_PCH), FWH3/LAD3 (C37 LPC_LAD3_PCH), FWH4/LFRAME# (D36 LPC_LFRAME# PCH), LDRQ0# (E36), LDRQ1#/GPIO23 (K36), SERIRQ (V5)

SATA 6G: SATA0RXN (AM3 PCH_RXN_C_HDD_TXN0 56), SATA0RXP (AM1 PCH_RXP_C_HDD_TXP0 56), SATA0TXN (AP7 PCH_TXN_HDD_RXN0 56), SATA0TXP (AP5 PCH_TXP_HDD_RXP0 56), SATA1RXN (AM10), SATA1RXP (AM8), SATA1TXN (AP11), SATA1TXP (AP10)

SATA: SATA2RXN (AD7), SATA2RXP (AD5), SATA2TXN (AH5), SATA2TXP (AH4), SATA3RXN (AB8), SATA3RXP (AB10), SATA3TXN (AF3), SATA3TXP (AF1), SATA4RXN (Y7 PCH_RXN_C_ODD_TXN4 56), SATA4RXP (Y5 PCH_RXP_C_ODD_TXP4 56), SATA4TXN (AD3 PCH_TXN_ODD_RXN4 56), SATA4TXP (AD1 PCH_TXP_ODD_RXP4 56), SATA5RXN (Y3), SATA5RXP (Y1), SATA5TXN (AB3), SATA5TXP (AB1), SATAICOMPO (Y11), SATAICOMPI (Y10), SATA3RCOMPO (AB12), SATA3COMPI (AB13), SATA3RBIAS (AH1), SATALED# (P3 SATA_LED# 68), SATA0GP/GPIO21 (V14 PCH_GPIO21), SATA1GP/GPIO19 (P1 BBS_BIT0)

HDD1

ODD

Layout Note: Place near PCH

RN2101 SRN0J-7-GP: LPC_AD0, LPC_AD1, LPC_AD2, LPC_AD3 — LPC_AD[3..0] 27,71

R2136 0R0402-PAD: LPC_FRAME# 27,71

Layout Note: HDD < 6000mil, mSATA < 6000mil, ODD < 12500mil

Layout Note: Place close PCH(<500mil)

Layout Note: Place close together.

Layout Note: HDA_SDO and HDA_BCLK must be length matched to within 500 mils

Q2102 2N7002BK-GP — 84.07002.I31 / 2nd = 84.2N702.W31 / 3rd = 84.2N702.J31

Q2101 2N7002BK-GP — 84.07002.I31 / 2nd = 84.2N702.W31 / 3rd = 84.2N702.J31

EC2104 SC10P50V2JN-4GP; EC2105 SCD1U10V2KX-5GP; EC2102 SC4D7P50V2CN-1GP; EC2103 SC4D7P50V2CN-1GP

reserve for EMI Request

X2101 X-32D768KHZ-65-GP — 82.30001.A41 / 2nd = 82.30001.841

M14 DIS

Wistron Corporation
21F, 88, Sec.1, Hsin Tai Wu Rd., Hsichih, Taipei Hsien 221, Taiwan, R.O.C.

Title: PCH (SPI/RTC/LPC/SATA/IHDA)

Size A3 | Document Number: OAK14 Chief River DIS | Rev A00

Date: Wednesday, September 05, 2012 | Sheet 21 of 105

SSID = PCH

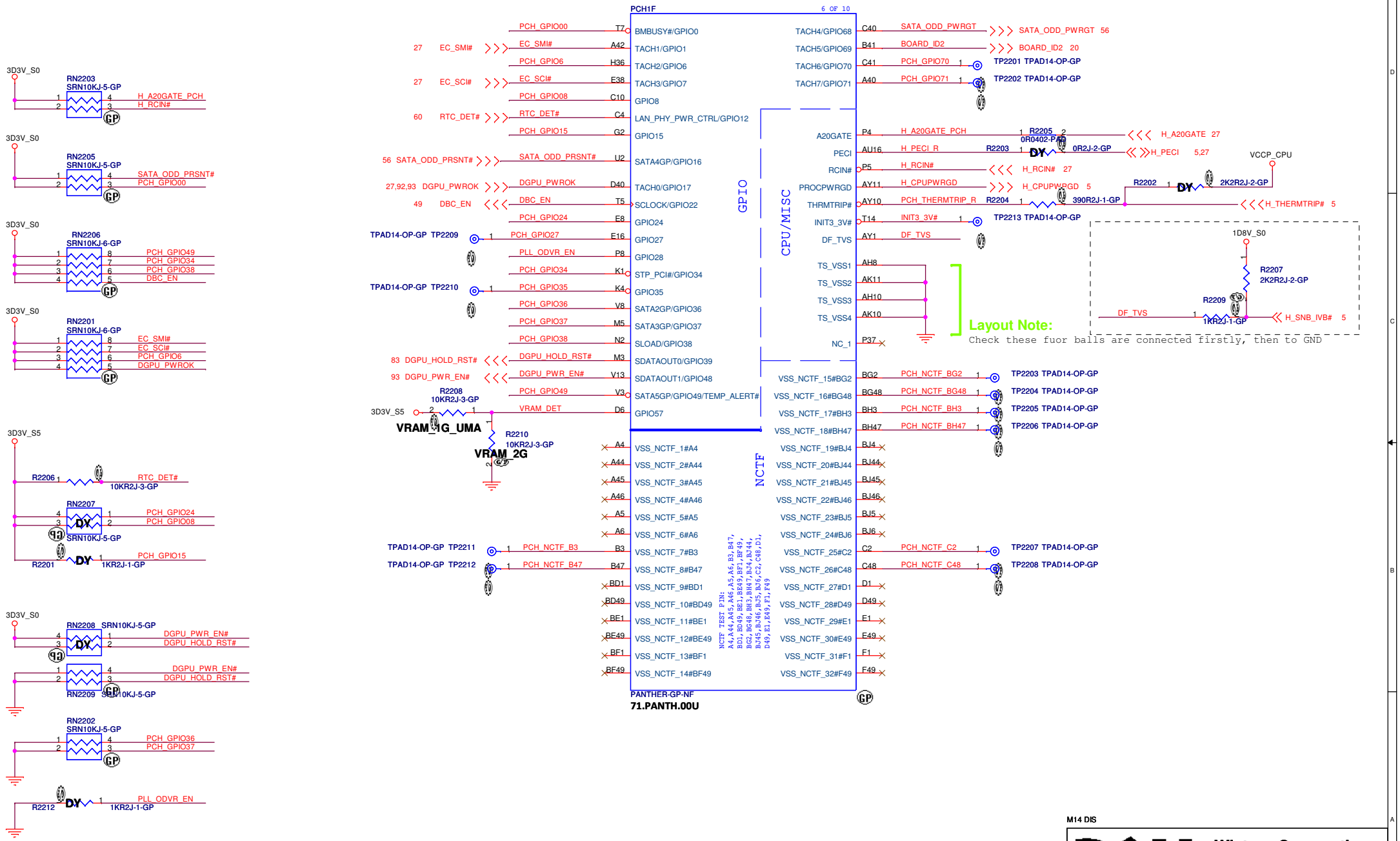

PLL ON DIE VR ENABLE	
GPIO28 (PLL_ODVR_EN)	Weakly internal pull up 20k. High - Enable LOW - Disable

M14 DIS

Wistron Corporation
21F, 88, Sec.1, Hsin Tai Wu Rd., Hsichih, Taipei Hsien 221, Taiwan, R.O.C.

Title: **PCH (GPIO/CPU)**

Size: A3 | Document Number: **OAK14 Chief River DIS** | Rev: **A00**

Date: Wednesday, September 05, 2012 | Sheet 22 of 105

SSID = PCH

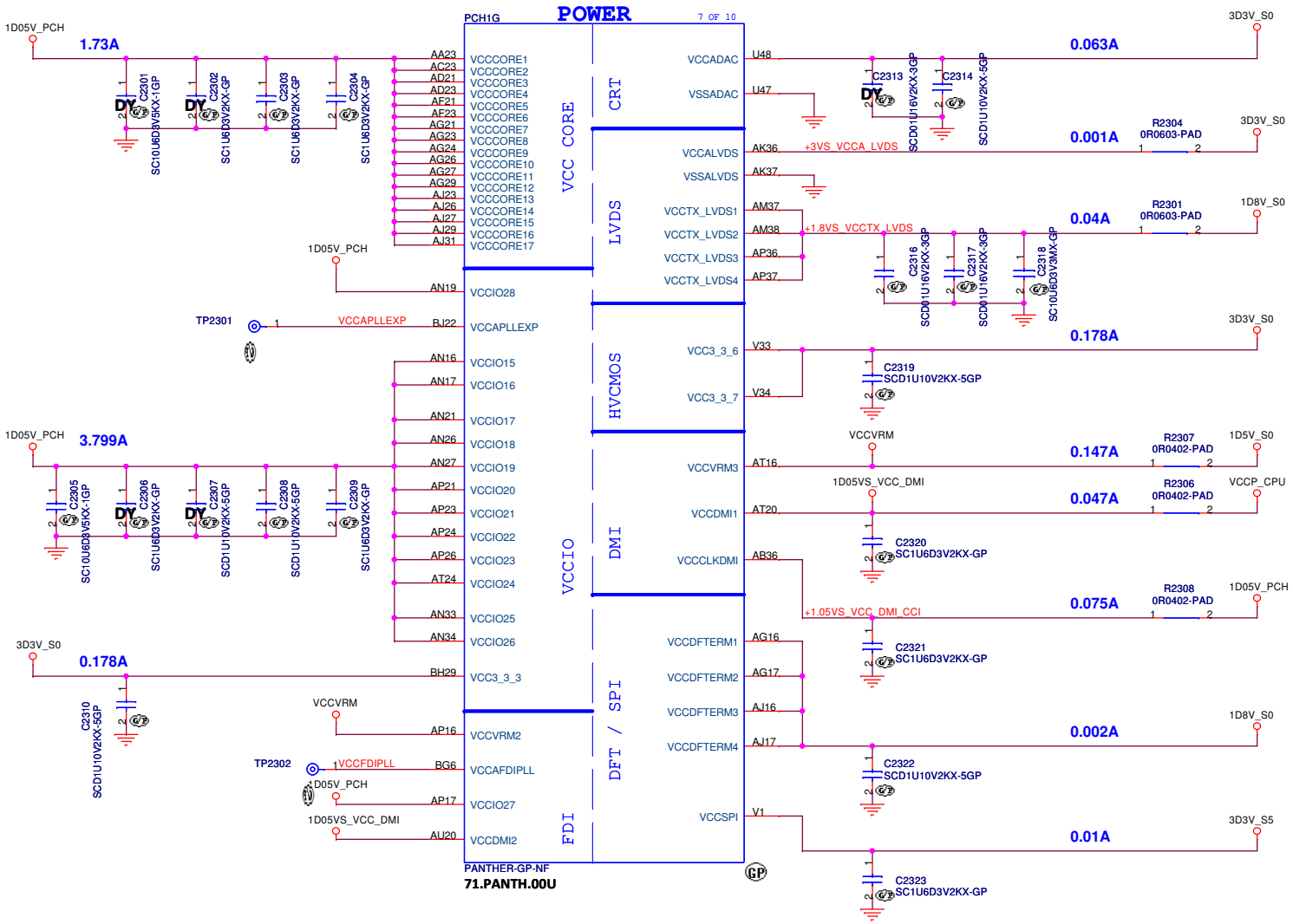

Voltage Rail	Voltage(V)	Iccmax(A)
V_PROC_IO	1.05/1.0	0.002
V5REF	5	0.001
V5REF_Sus	5	0.001
Vcc3_3	3.3	0.178
VccADAC	3.3	0.063
VccADPLLA	1.05	0.075
VccADPLLB	1.05	0.075
VccCore	1.05	1.73
VccDMI	1.1	0.047
VccIO	1.05	3.799
VccASW	1.05	0.803
VccSPI	3.3	0.01
VccDSW3_3	3.3	0.001
VccDFTERM	1.8	0.002
VccRTC	3.3	6uA
VccSus3_3	3.3	0.065
VccSusHDA	3.3	0.01
VccVRM	1.5	0.147
VccClkDMI	1.05	0.075
VccSSC	1.05	0.095
VccDIFFCLKN	1.05	0.05
VccALVDS	3.3	0.001
VccTX_LVDS	1.8	0.04

Refer to chipset EDS V.1.8

check

M14 DIS

Wistron Corporation
21F, 88, Sec.1, Hsin Tai Wu Rd., Hsichih,
Taipei Hsien 221, Taiwan, R.O.C.

Title: PCH (POWER1)

Size: A3 | Document Number: OAK14 Chief River DIS | Rev: A00

Date: Wednesday, September 05, 2012 | Sheet 23 of 105

SSID = PCH

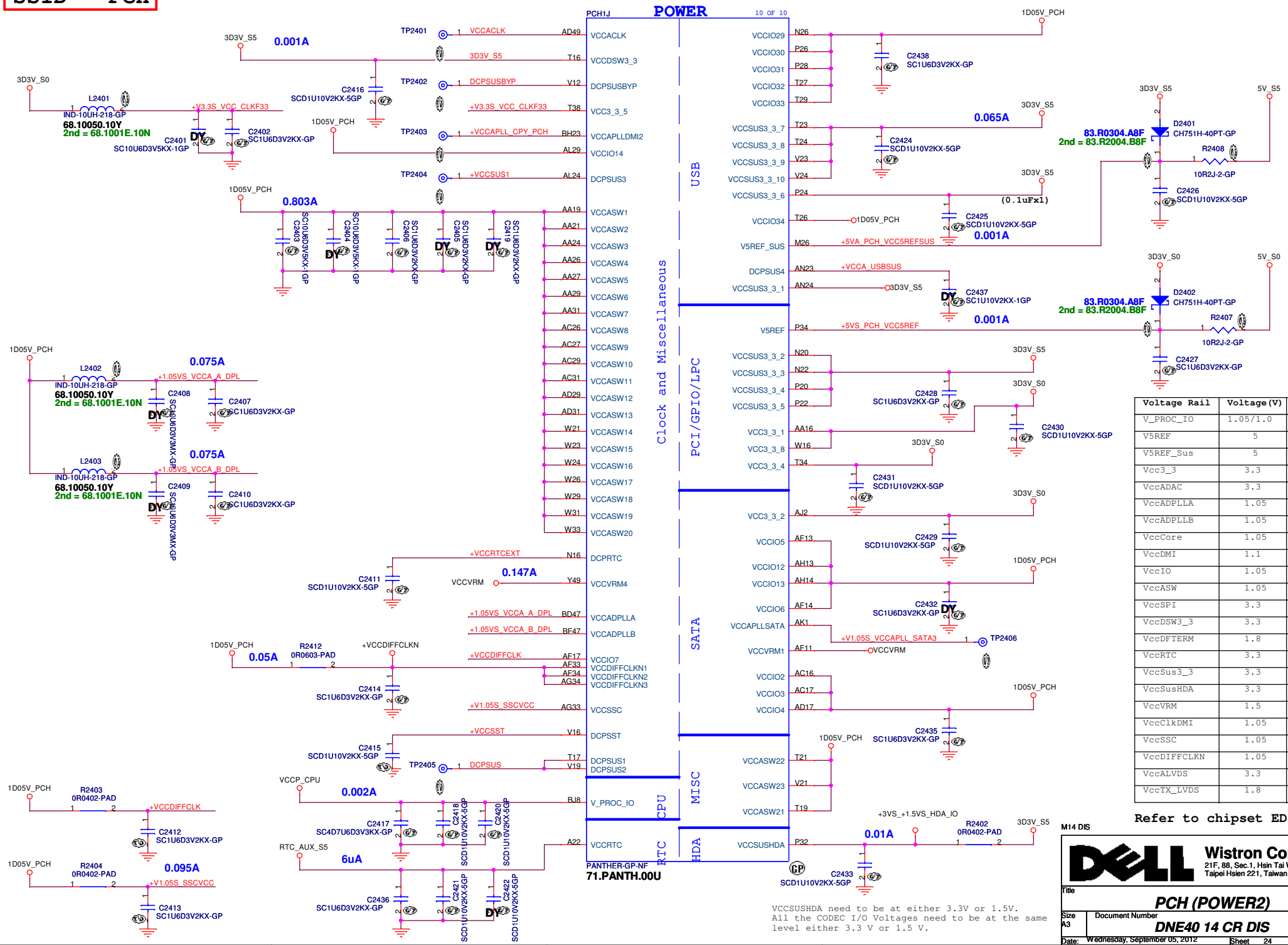

VCCSUSHDA need to be at either 3.3V or 1.5V.
All the CODEC I/O Voltages need to be at the same level either 3.3 V or 1.5 V.

Voltage Rail	Voltage(V)	Iccmax(A)
V_PROC_IO	1.05/1.0	0.002
V5REF	5	0.001
V5REF_Sus	5	0.001
Vcc3_3	3.3	0.178
VccADAC	3.3	0.063
VccADPLLA	1.05	0.075
VccADPLLB	1.05	0.075
VccCore	1.05	1.73
VccDMI	1.1	0.047
VccIO	1.05	3.799
VccASW	1.05	0.803
VccSPI	3.3	0.01
VccDSW3_3	3.3	0.001
VccDFTERM	1.8	0.002
VccRTC	3.3	6uA
VccSus3_3	3.3	0.065
VccSusHDA	3.3	0.01
VccVRM	1.5	0.147
VccClkDMI	1.05	0.075
VccSSC	1.05	0.095
VccDIFFCLKN	1.05	0.05
VccALVDS	3.3	0.001
VccTX_LVDS	1.8	0.04

Refer to chipset EDS V.1.8

M14 DIS

Wistron Corporation
21F, 88, Sec.1, Hsin Tai Wu Rd., Hsichih, Taipei Hsien 221, Taiwan, R.O.C.

Title: PCH (POWER2)

Size: A3 | Document Number: DNE40 14 CR DIS | Rev: A00

Date: Wednesday, September 05, 2012 | Sheet 24 of 105

SSID = PCH

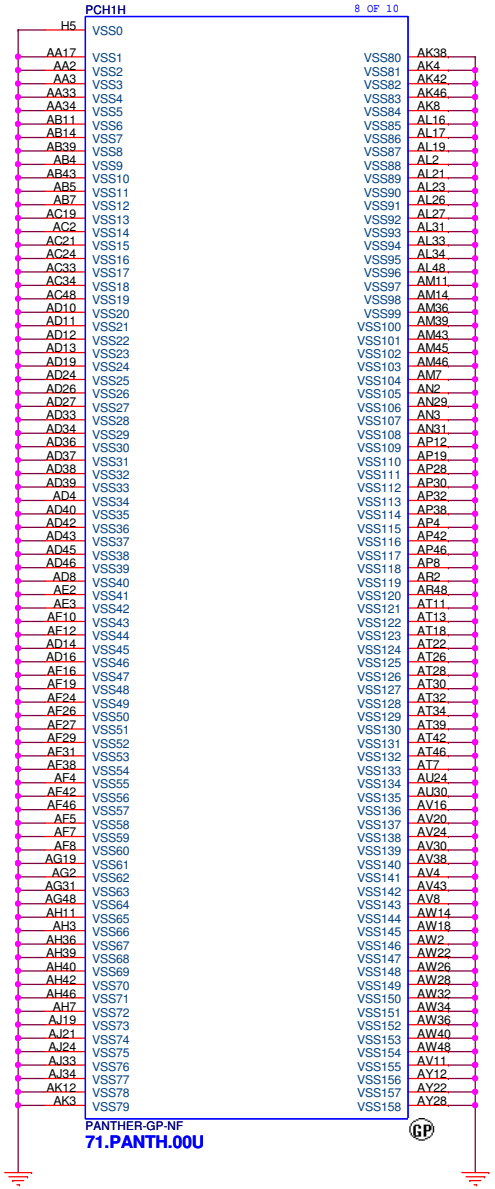

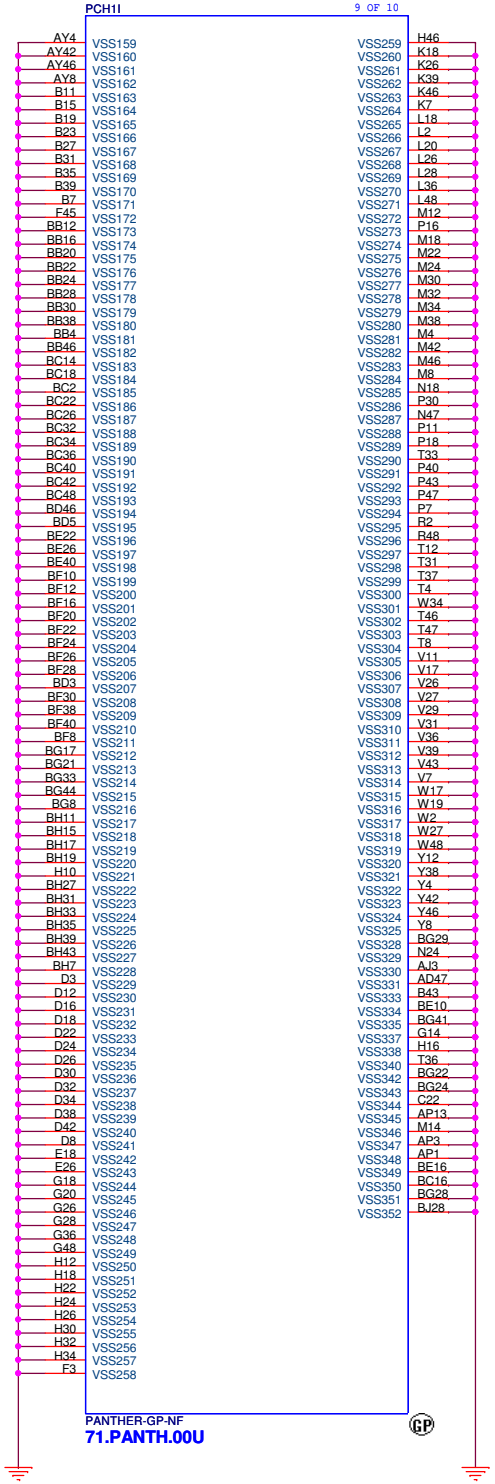

M14 DIS

Wistron Corporation
21F, 88, Sec.1, Hsin Tai Wu Rd., Hsichih,
Taipei Hsien 221, Taiwan, R.O.C.

Title: **PCH (VSS)**

Size: A3 | Document Number: **OAK14 Chief River DIS** | Rev: **A00**

Date: Wednesday, September 05, 2012 | Sheet 25 of 105

(Blanking)

M14 DIS

Wistron Corporation
21F, 88, Sec.1, Hsin Tai Wu Rd., Hsichih,
Taipei Hsien 221, Taiwan, R.O.C.

Title

Reserved

Size	Document Number	Rev
A3	OAK14 Chief River DIS	A00

Date: Wednesday, September 05, 2012 Sheet 26 of 105

SSID = KBC

PCB VER AD(GPIO91)	PULL-LOW RESISTOR	PULL-HIGH RESISTOR	VOLTAGE
X00	100.0K	10.0K	3.0V
X01	100.0K	20.0K	2.75V
X02	100.0K	33.0K	2.48V
A00	100.0K	47.0K	2.24V
Reserved	100.0K	64.9K	2.0V
Reserved	100.0K	76.8	1.87V
Reserved	100.0K	100.0K	1.65V
Reserved	100.0K	143.0K	1.358V
Reserved	100.0K	174.0K	1.204V
Reserved	100.0K	215.0K	1.048V

MODEL_ID_DET(GPIO07)	PULL-LOW RESISTOR	PULL-HIGH RESISTOR	VOLTAGE
OAK14_UMA	100.0K	10.0K(64.10025.6DL)	3.0V
OAK14_DIS_N13P	100.0K	20.0K(64.20025.6DL)	2.75V
OAK14_DIS_N13M	100.0K	33.0K(64.33025.6DL)	2.48V
TBD	100.0K	47.0K(64.47025.6DL)	2.24V
TBD	100.0K	64.9K(64.64925.6DL)	2.0V
TBD	100.0K	76.8K(64.76825.6DL)	1.87V
TBD	100.0K	100.0K(64.10035.6DL)	1.65V
TBD	100.0K	143.0K(64.14335.6DL)	1.358V
TBD	100.0K	174.0K(64.17435.6DL)	1.204V
TBD	100.0K	215.0K(64.21535.6DL)	1.048V

Layout Note:
Need very close to EC

Layout Note:
Need very close to EC

Layout Note:
Connect GND and AGND planes via either 0R resistor or connect directly.

Layout Note:
Need very close to EC

<------ TP

<------ BATTERY / CHARGER

<------PCH / eDP

EC_GPIO23 High Active

84.07002.I31
2nd = 84.2N702.W31
3rd = 84.2N702.J31

C502 : check list 1.5

Power Switch Logic(PSL)

84.02130.031
2nd = 84.00102.031
3rd = 84.03413.A31
4th = 84.02301.G31

84.07002.I31
2nd = 84.2N702.W31
3rd = 84.2N702.J31

EC GPIO standard PH/PL

X00 0608

83.00016.K11
2nd = 83.00016.F11

83.00016.K11
2nd = 83.00016.F11

83.00016.K11
2nd = 83.00016.F11

84.T3906.A11
2nd = 84.03906.F11

M14 DIS

Wistron Corporation
21F, 88, Sec.1, Hsin Tai Wu Rd., Hsichih, Taipei Hsien 221, Taiwan, R.O.C.

Title: KBC Nuvoton NPCE885

Size: A2 | Document Number: OAK14 Chief River DIS | Rev: A00

Date: Wednesday, September 05, 2012 | Sheet 27 of 105

SSID = Thermal

Thermal sensor NCT7718W

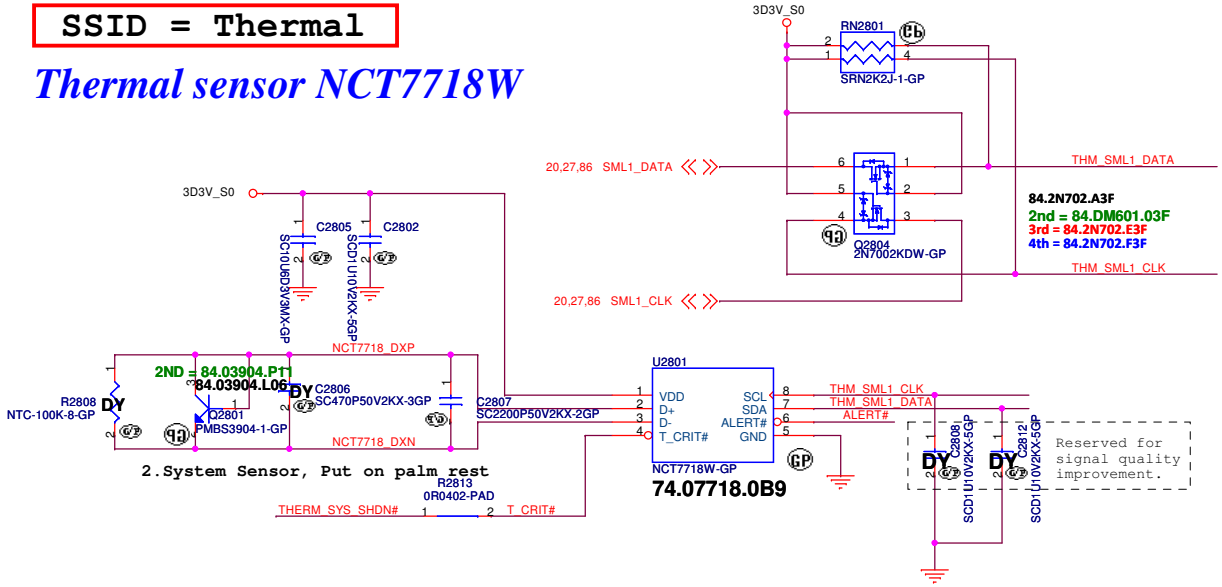

ALERT# /T_CRIT#
Pull-up Resistor

R5 \ R7	2Kohm	7.5Kohm	10.5Kohm	14Kohm	18.7Kohm
2Kohm	77℃	87℃	97℃	107℃	117℃
7.5Kohm	79℃	89℃	99℃	109℃	119℃
10.5Kohm	81℃	91℃	101℃	111℃	121℃
14Kohm	83℃	93℃	103℃	113℃	123℃
18.7Kohm	85℃	95℃	105℃	115℃	125℃

T_CRIT temperature strapping point

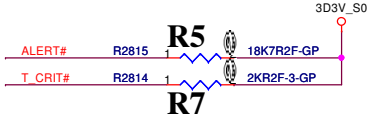

Layout notice :
Both DXN and DXP routing 10 mil
trace width and 10 mil spacing. and route has to be away from the high noise area.
Put the C2807 2200pF to close the NCT7718W

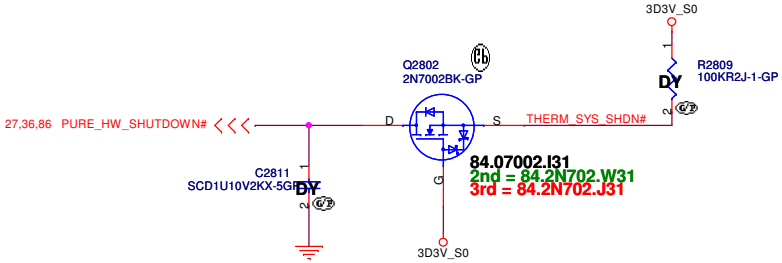

Fan controller NCT3940S-A

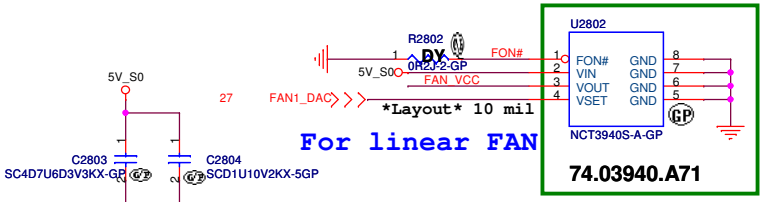

For linear FAN

X02 0730 change main source

Fan Connecter

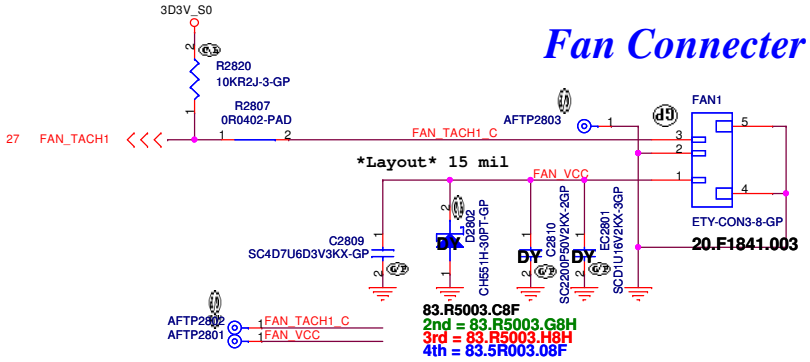

M14 DIS

Wistron Corporation
21F, 88, Sec.1, Hsin Tai Wu Rd., Hsichih,
Taipei Hsien 221, Taiwan, R.O.C.

Title: Thermal NCT7718W/Fan Controllor P2793

Size	Document Number	Rev
A3	OAK14 Chief River DIS	A00

Date: Wednesday, September 05, 2012 Sheet 28 of 105

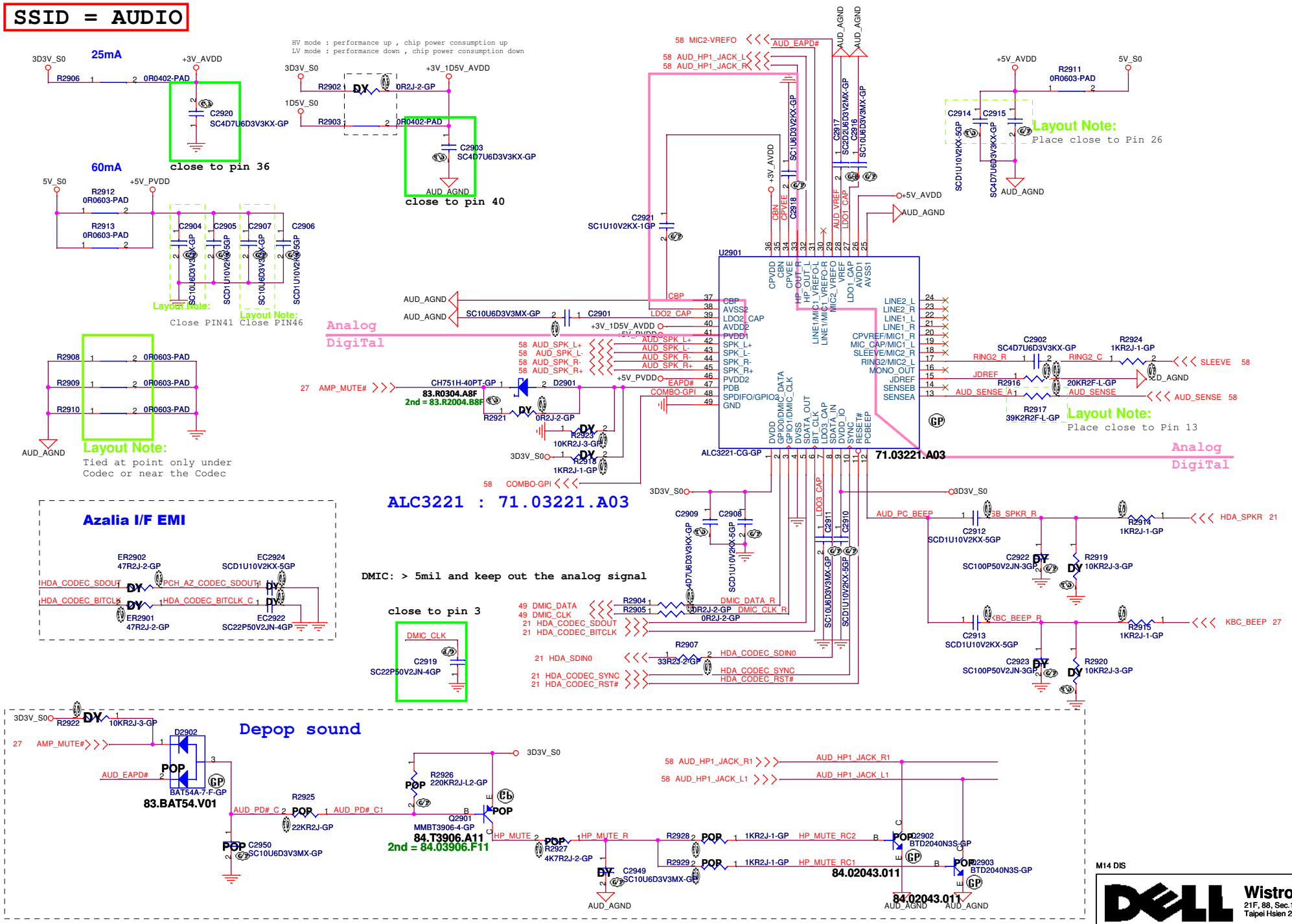

M14 DIS

Wistron Corporation
21F, 88, Sec.1, Hsin Tai Wu Rd., Hsichih, Taipei Hsien 221, Taiwan, R.O.C.

Title: Audio Codec ALC3221

Size: A3 | Document Number: OAK14 Chief River DIS | Rev: A00

Date: Wednesday, September 05, 2012 | Sheet 29 of 105

(Blanking)

M14 DIS

Wistron Corporation
21F, 88, Sec.1, Hsin Tai Wu Rd., Hsichih,
Taipei Hsien 221, Taiwan, R.O.C.

Title: *Reserved*

Size	Document Number	Rev
A3	*OAK14 Chief River DIS*	*A00*

LAN CHIP

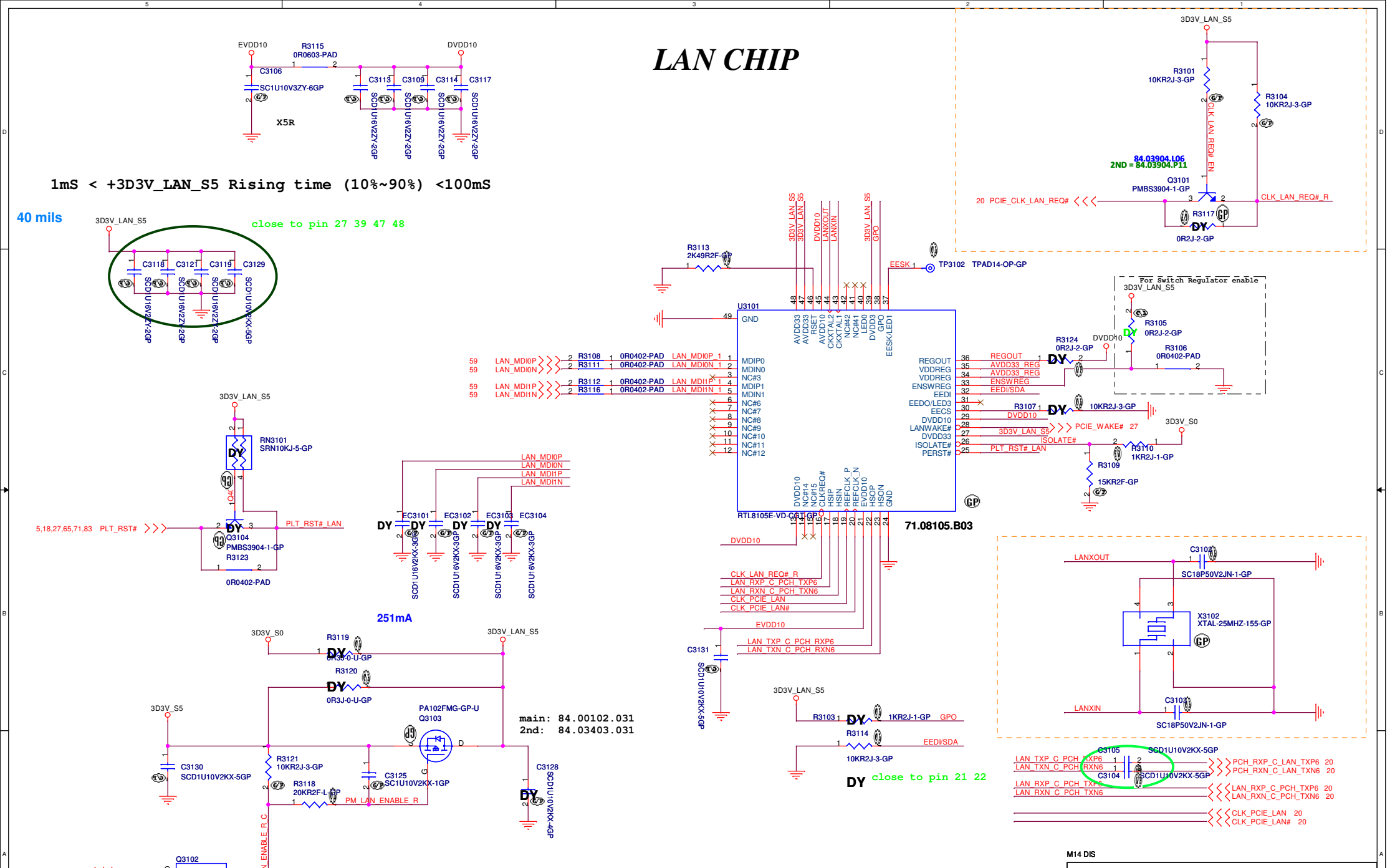

M14 DIS

Wistron Corporation
21F, 88, Sec.1, Hsin Tai Wu Rd., Hsichih,
Taipei Hsien 221, Taiwan, R.O.C.

Title: **LOM**

Size	Document Number	Rev
A3	OAK14 Chief River DIS	A00

Date: Wednesday, September 05, 2012 Sheet 31 of 105

SSID = SDIO

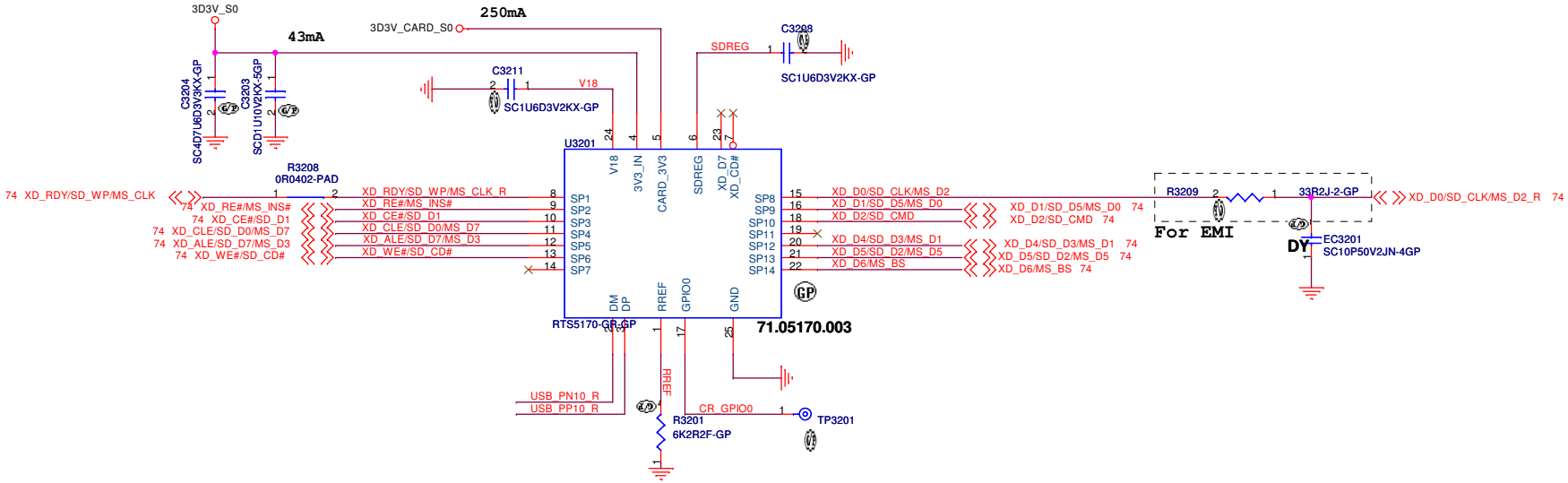

Close U3201

M14 DIS

Wistron Corporation
21F, 88, Sec.1, Hsin Tai Wu Rd., Hsichih,
Taipei Hsien 221, Taiwan, R.O.C.

Title: Card Reader-RTS5170

Size: A3 | Document Number: OAK14 Chief River DIS | Rev: A00

Date: Wednesday, September 05, 2012 | Sheet 32 of 105

(Blanking)

M14 DIS

Wistron Corporation
21F, 88, Sec.1, Hsin Tai Wu Rd., Hsichih,
Taipei Hsien 221, Taiwan, R.O.C.

Title: *Reserved*

Size	Document Number	Rev
A3	*OAK14 Chief River DIS*	*A00*

(Blanking)

M14 DIS

Wistron Corporation
21F, 88, Sec.1, Hsin Tai Wu Rd., Hsichih,
Taipei Hsien 221, Taiwan, R.O.C.

Title: *Reserved*

Size: A3 | Document Number: *OAK14 Chief River DIS* | Rev: *A00*

Date: Wednesday, September 05, 2012 | Sheet 34 of 105

(Blanking)

M14 DIS

Wistron Corporation
21F, 88, Sec.1, Hsin Tai Wu Rd., Hsichih,
Taipei Hsien 221, Taiwan, R.O.C.

Title: Reserved

Size: A3 | Document Number: OAK14 Chief River DIS | Rev: A00

Date: Wednesday, September 05, 2012 | Sheet 35 of 105

SSID = Reset.Suspend

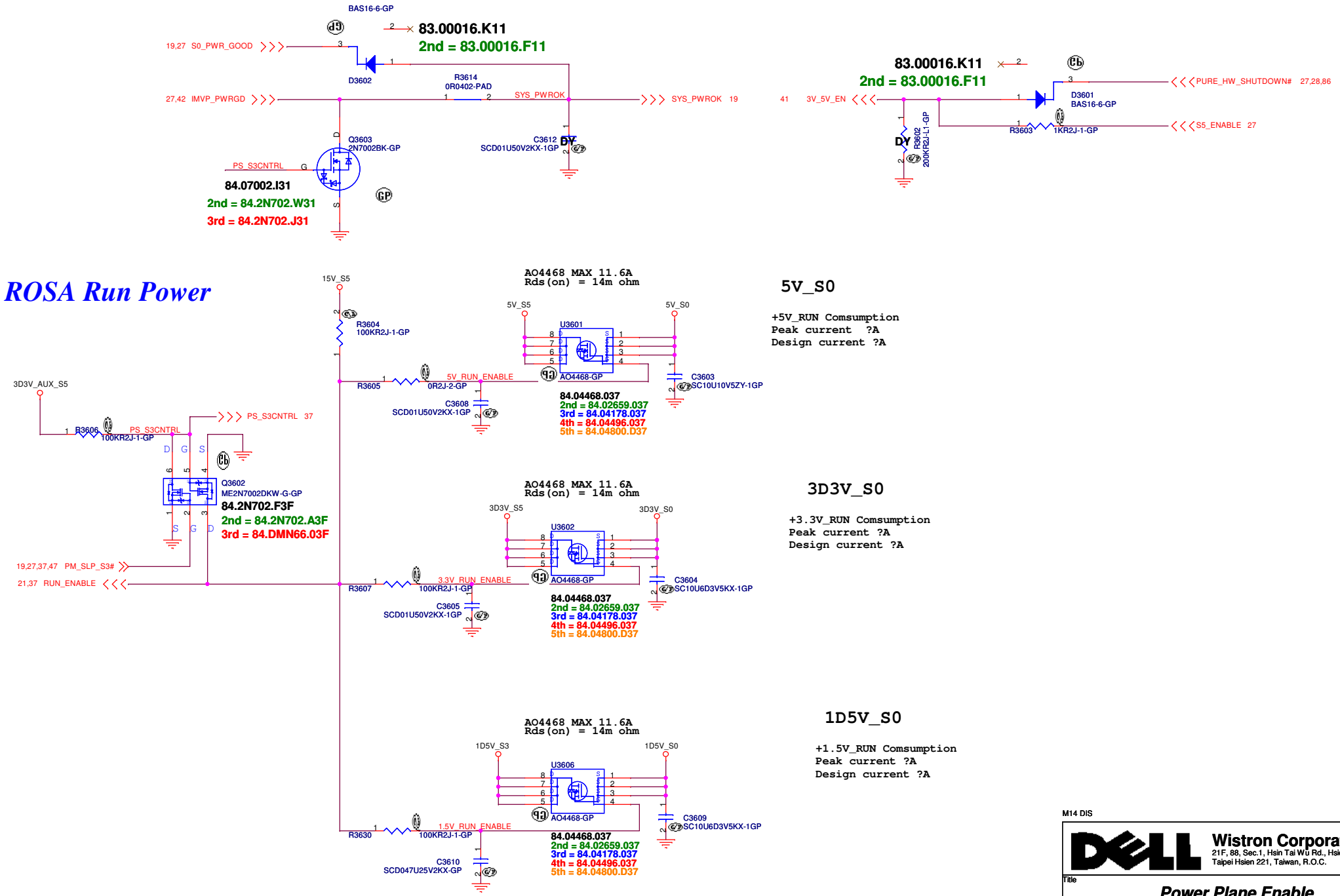

M14 DIS

Wistron Corporation
21F, 88, Sec.1, Hsin Tai Wu Rd., Hsichih,
Taipei Hsien 221, Taiwan, R.O.C.

Title: Power Plane Enable

Size: A3 | Document Number: OAK14 Chief River DIS | Rev: A00

Date: Wednesday, September 05, 2012 | Sheet 36 of 105

Close to CPU
S3 Power Reduction Circuit Processor VREF_DQ Implementation

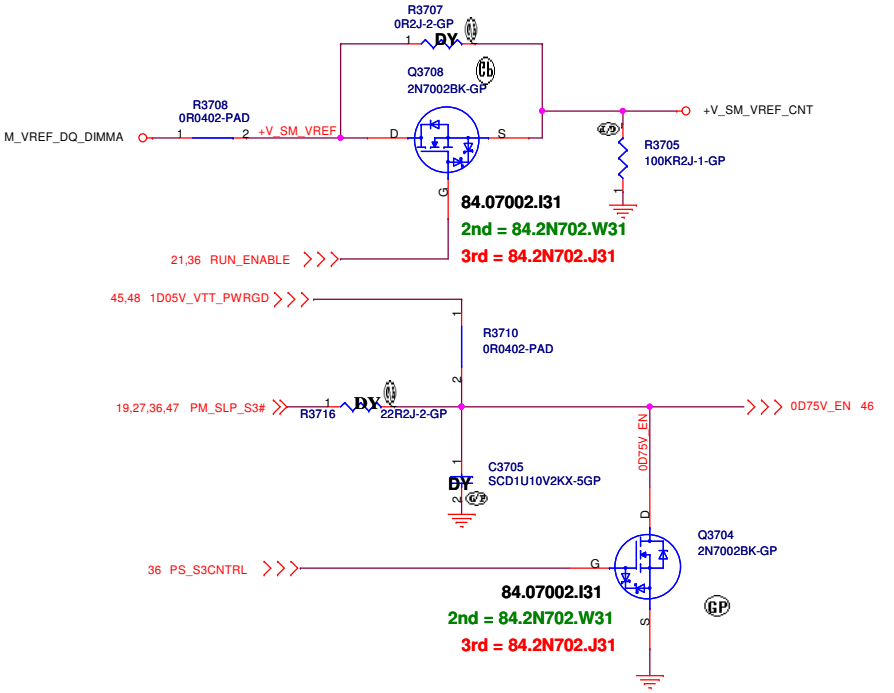

Close to DIMM
S3 Power Reduction Circuit SM_DRAMPWROK

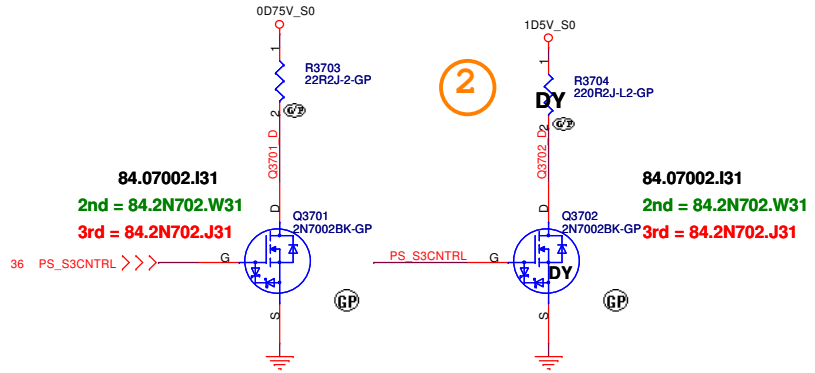

Close to CPU
S3 Power Reduction Circuit SM_DRAMPWROK

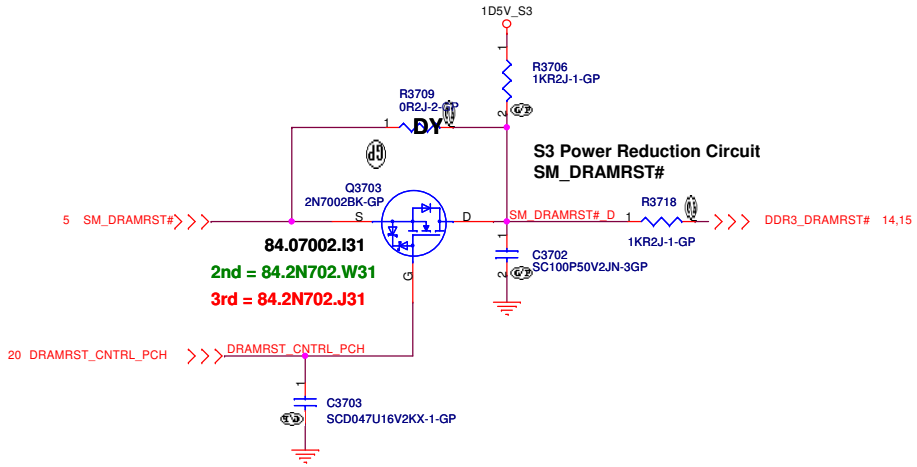

Close to CPU
S3 Power Reduction Circuit SM_DRAMPWROK

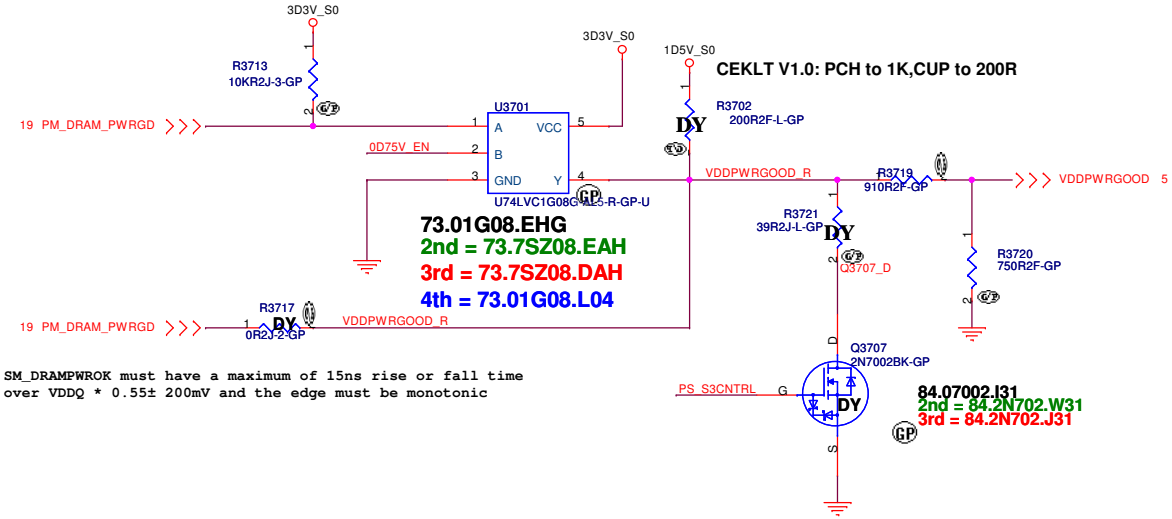

SM_DRAMPWROK must have a maximum of 15ns rise or fall time over VDDQ * 0.55± 200mV and the edge must be monotonic

M14 DIS

Wistron Corporation
21F, 88, Sec.1, Hsin Tai Wu Rd., Hsichih, Taipei Hsien 221, Taiwan, R.O.C.

Title: ***S3 Reduction Circuit***

Size	Document Number	Rev
A3	OAK14 Chief River DIS	A00

Date: Wednesday, September 05, 2012 Sheet 37 of 105

SSID = PWR.Support

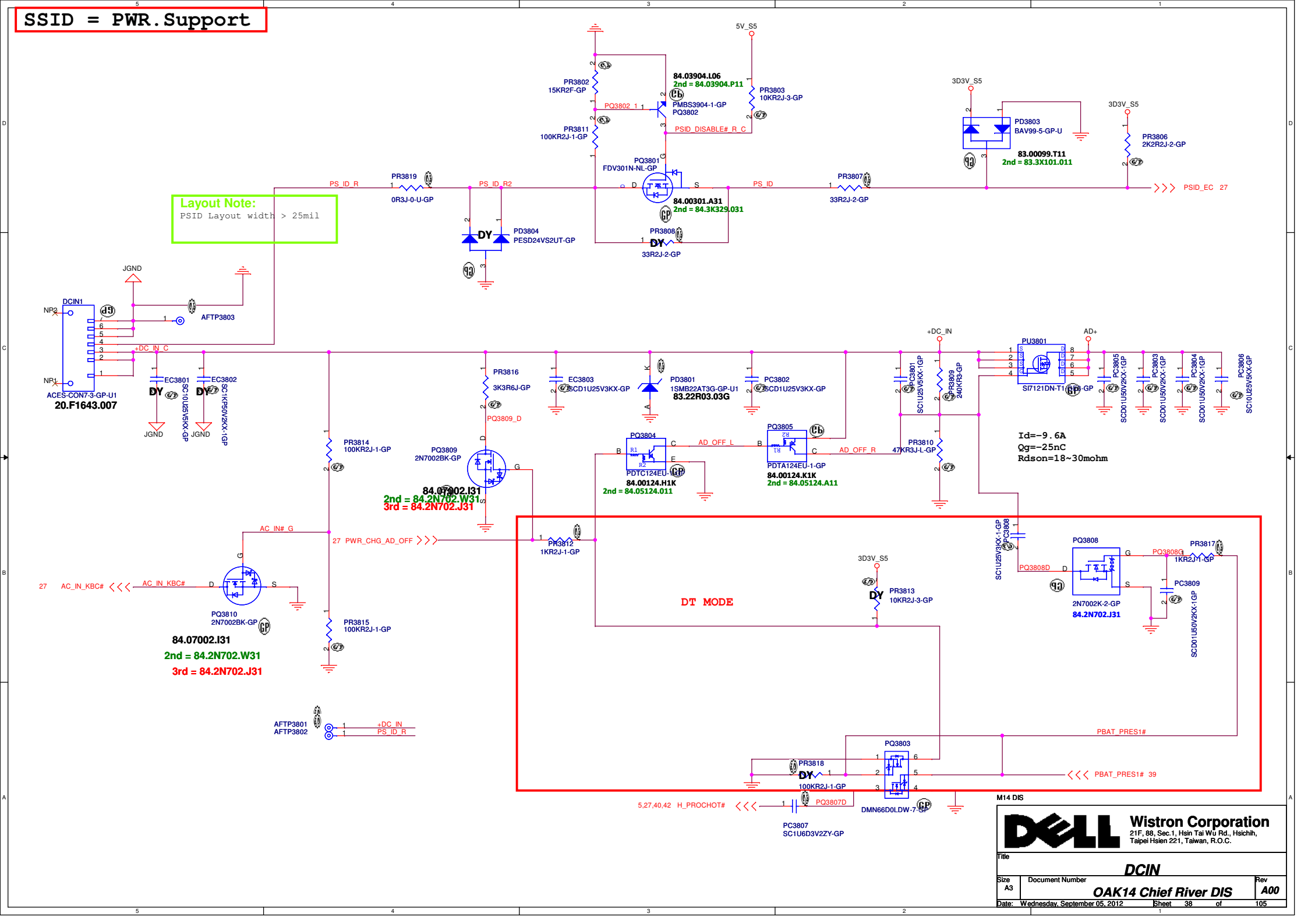

M14 DIS

Wistron Corporation
21F, 88, Sec.1, Hsin Tai Wu Rd., Hsichih,
Taipei Hsien 221, Taiwan, R.O.C.

Title: **DCIN**

Size: A3 | Document Number: **OAK14 Chief River DIS** | Rev: **A00**

Date: Wednesday, September 05, 2012 | Sheet 38 of 105

SSID = PWR.Support

Batt Connecter

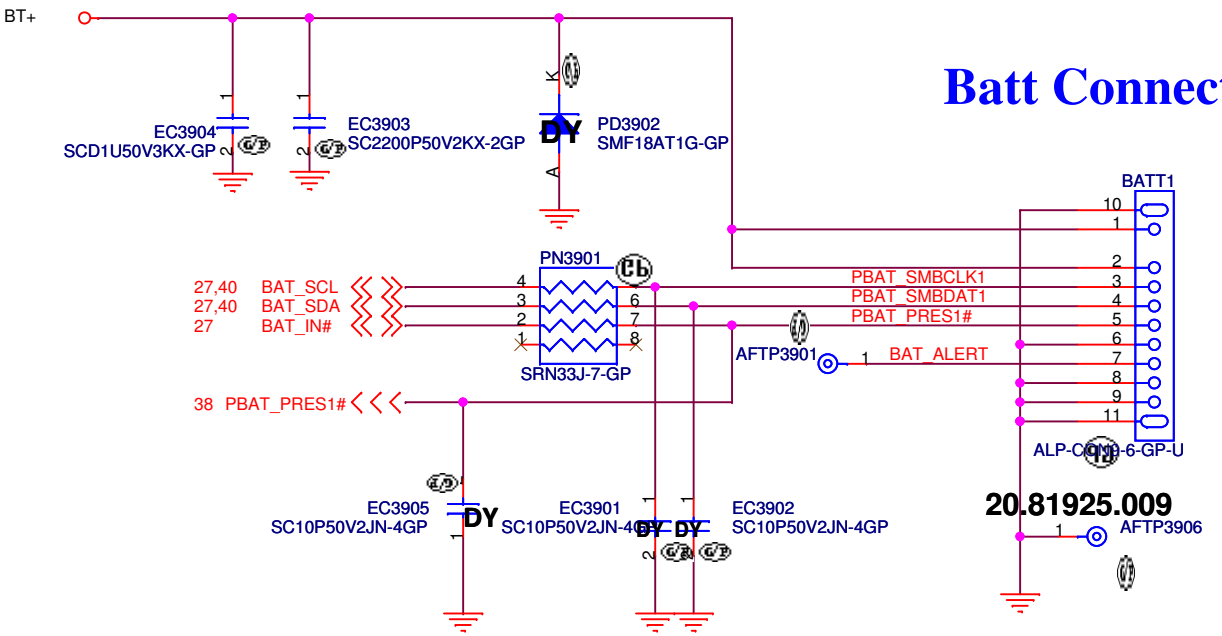

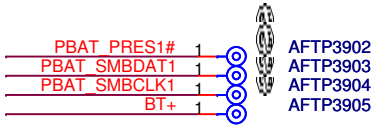

Placement: Close to Batt Connector

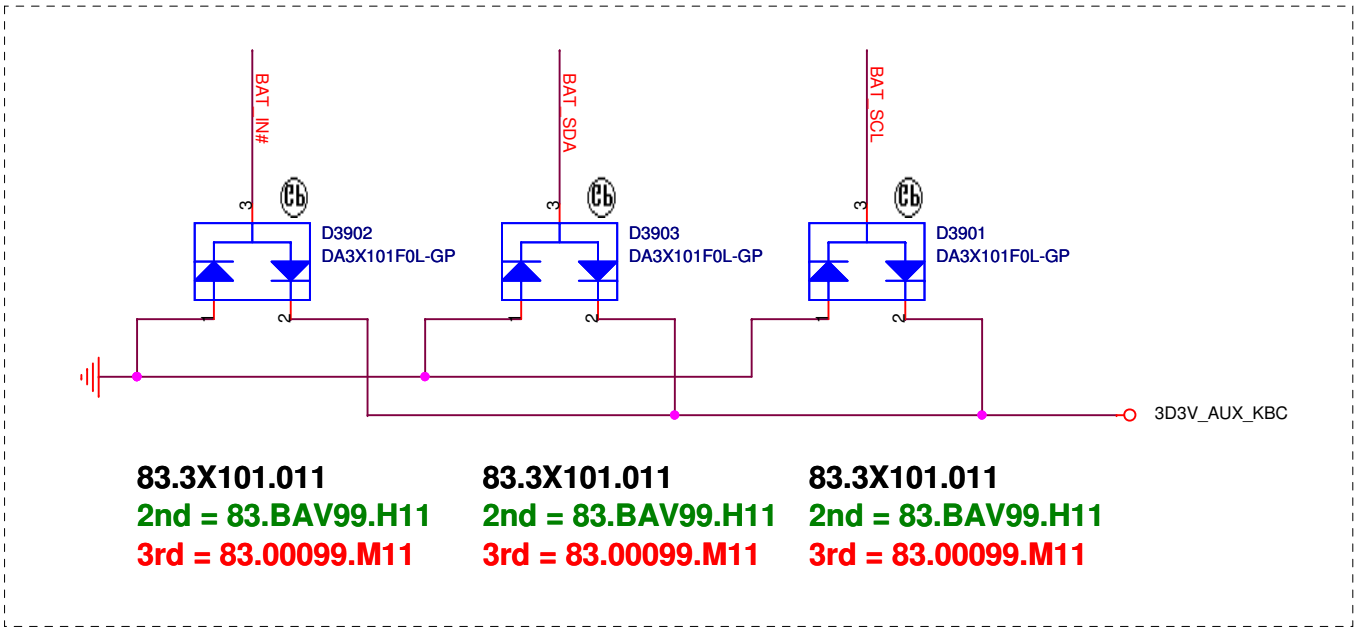

M14 DIS

Wistron Corporation
21F, 88, Sec.1, Hsin Tai Wu Rd., Hsichih,
Taipei Hsien 221, Taiwan, R.O.C.

Title: BATT CONN

Size: A4 | Document Number: OAK14 Chief River DIS | Rev: A00

Date: Wednesday, September 05, 2012 | Sheet 39 of 105

SSID = Charger

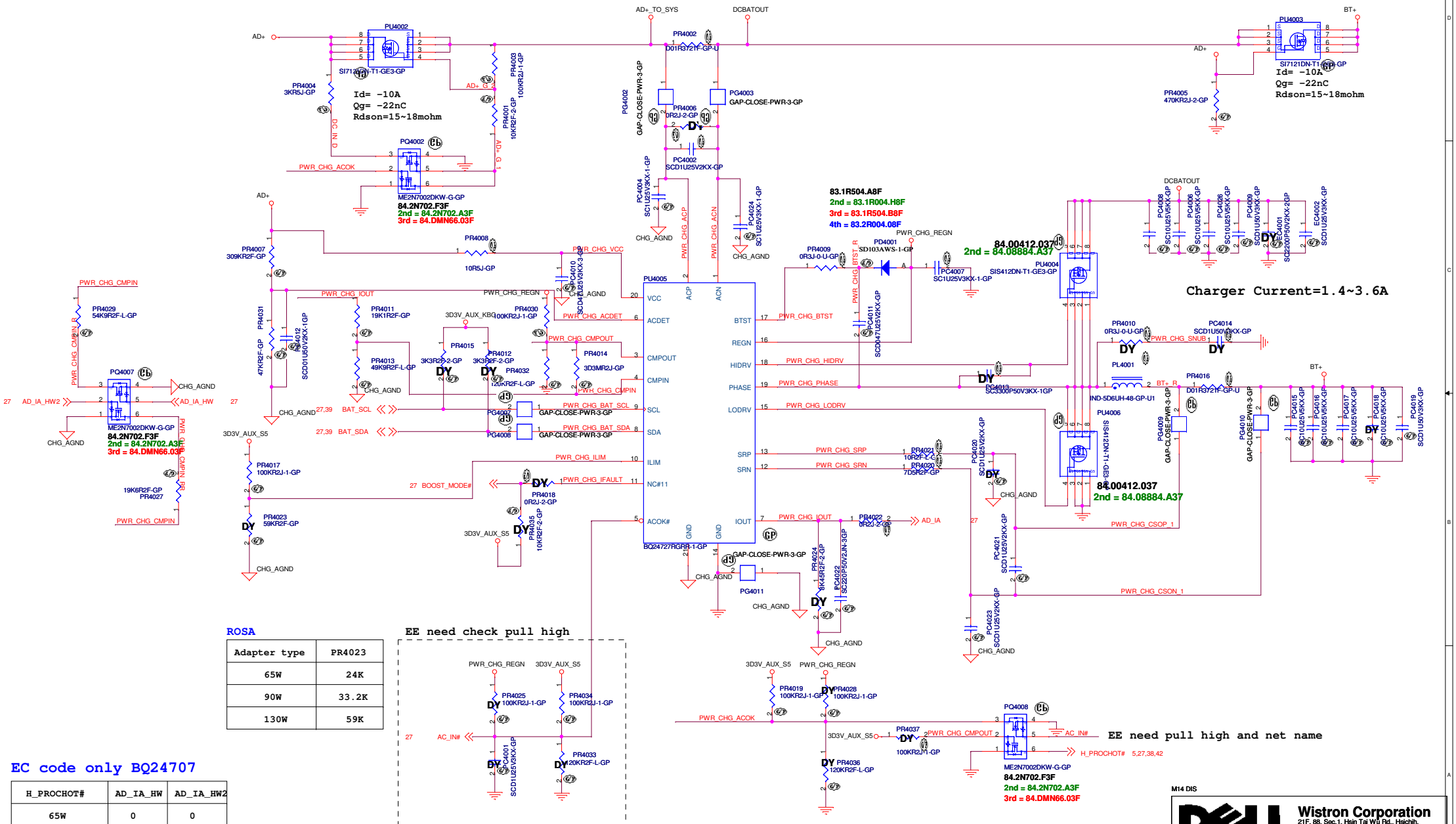

ROSA

Adapter type	PR4023
65W	24K
90W	33.2K
130W	59K

EC code only BQ24707

H_PROCHOT#	AD_IA_HW	AD_IA_HW2
65W	0	0
90W	1	0
130W	0	1

M14 DIS

Wistron Corporation
21F, 88, Sec.1, Hsin Tai Wu Rd., Hsichih,
Taipei Hsien 221, Taiwan, R.O.C.

Title: CHARGER BQ24727

Size: Custom | Document Number: DNE40 14 CR DIS | Rev: A00

Date: Wednesday, September 05, 2012 | Sheet 40 of 105

SSID = PWR.Plane.Regulator_5v3p3v

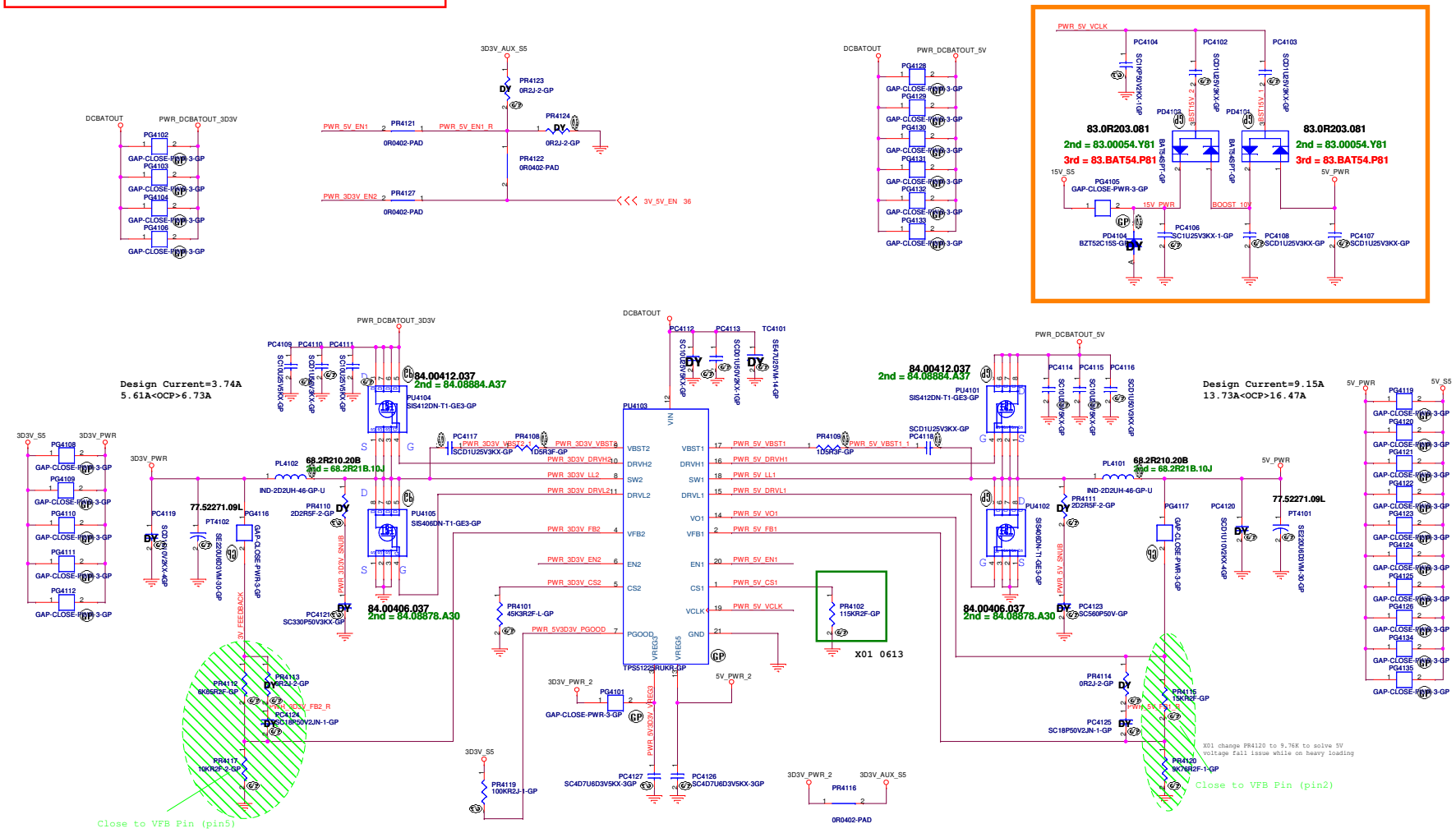

I/P cap: CHIP CAP C 10U 25V K0805 X5R/ 78.10622.51L
Inductor: CHIP IND 3.3UH PCMC063T-3R3MN Cyntec 28mohm/30mohm Isat =13.5Arms 68.3R310.20A
O/P cap: CHIP CAP POL 220U 6.3V M 6.3*4.5 /Matsuti/ 17mOhm / 77.52271.09L
H/S:SIS412DN-T1-GE3 / 24mOhm/30mOhm@4.5Vgs / 84.00412.037
L/S:SIS406DN-T1-GE3 / 11.5mOhm/14.5mOhm@4.5Vgs / 84.00406.037

I/P cap: CHIP CAP C 10U 25V K0805 X5R/ 78.10622.51L
Inductor: CHIP IND 3.3UH PCMC063T-3R3MN Cyntec 28mohm/30mohm Isat =13.5Arms 68.3R310.20A
O/P cap: CHIP CAP POL 220U 6.3V M 6.3*4.5 /Matsuti/ 17mOhm / 77.52271.09L
H/S:SIS412DN-T1-GE3 / 24mOhm/30mOhm@4.5Vgs / 84.00412.037
L/S:SIS406DN-T1-GE3 / 11.5mOhm/14.5mOhm@4.5Vgs / 84.00406.037

M14 DIS

Wistron Corporation
21F, 88, Sec.1, Hsin Tai Wu Rd., Hsichih,
Taipei Hsien 221, Taiwan, R.O.C.

Title: 3V/5V TPS51225

Size: A2 | Document Number: OAK14 Chief River DIS | Rev: A00

Date: Wednesday, September 05, 2012 | Sheet 41 of 105

SSID = CPU.Regulator

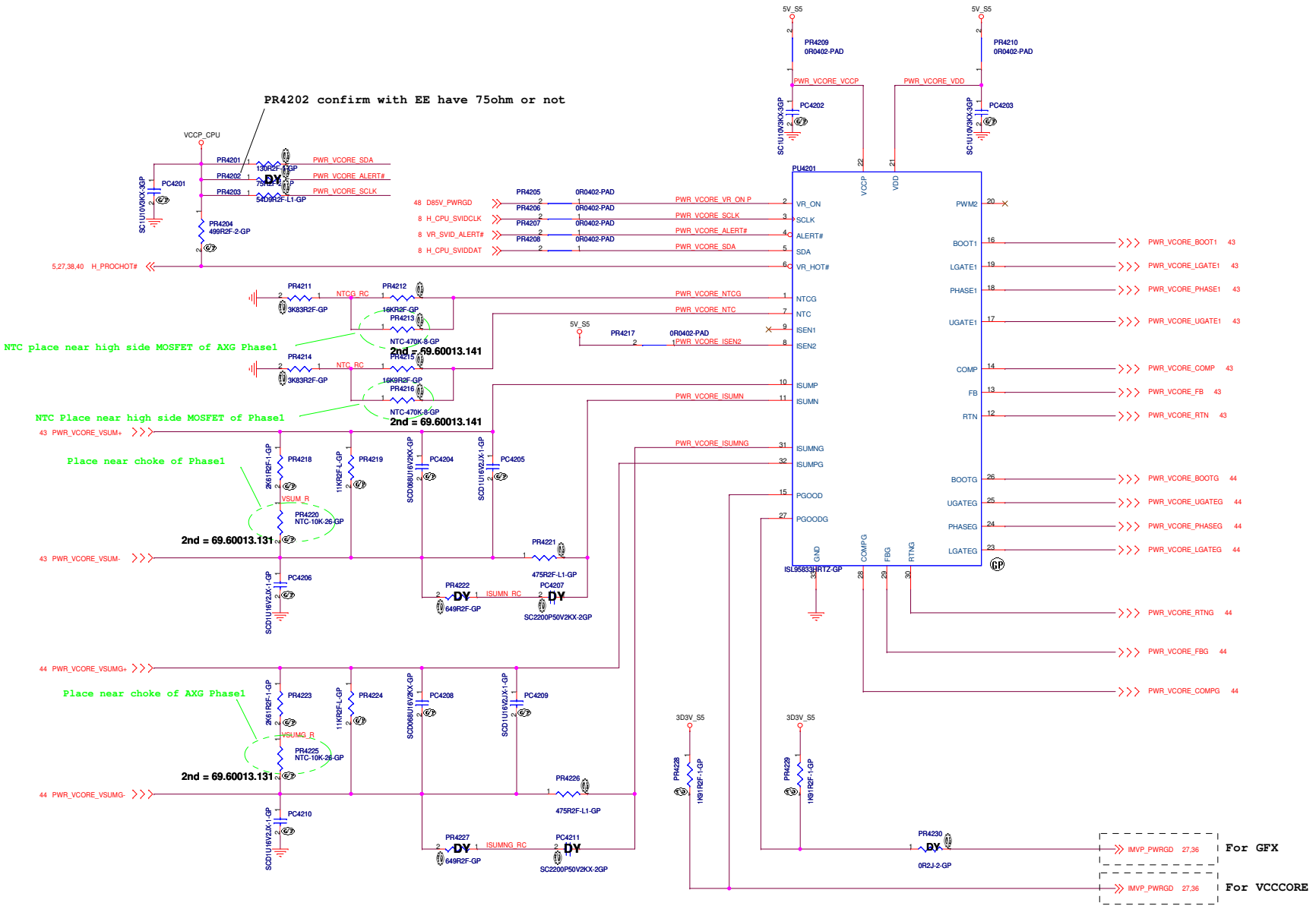

M14 DIS

Wistron Corporation
21F, 88, Sec.1, Hsin Tai Wu Rd., Hsichih,
Taipei Hsien 221, Taiwan, R.O.C.

Title: *ISL95833_CPU_CORE(1/3)*

Size	Document Number	Rev
C	OAK14 Chief River DIS	A00

Date: Wednesday, September 05, 2012 Sheet 42 of 105

SSID = CPU.Regulator

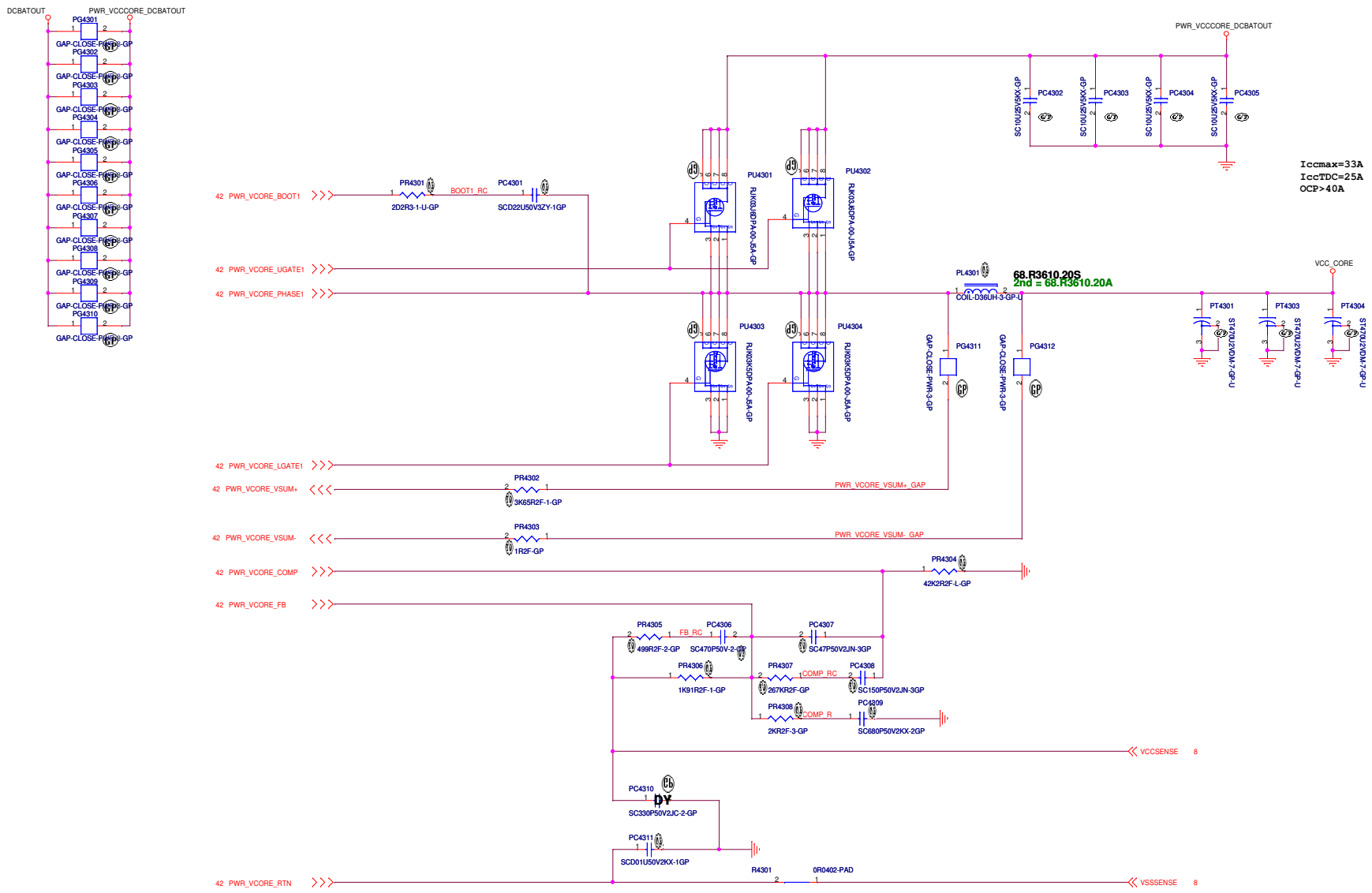

I/P cap: 10U 25V K0805 X5R/ 78.10622.51L
Inductor: CHIP CHK 0.36UH PCMC104T-R36MH 1.05mohm/ Isat =60A rms68.R3610.20S
O/P cap: CHIP CAP EL 470U 2V 7.3*4.3 ESR=0.0045 3.8Arms Panasonic/79.47719.9BL
H/S: RJK03J6DPA-00#J5A / 10mohm/13mOhm@4.5Vgs/ 84.00036.037
L/S: RJK03K5DPA-00#J5A / 3mohm/3.9mOhm@4.5Vgs/ 84.00035.037

M14 DIS

Wistron Corporation
21F, 88, Sec.1, Hsin Tai Wu Rd., Hsichih,
Taipei Hsien 221, Taiwan, R.O.C.

Title: ISL95833_CPU_CORE(2/3)

Size	Document Number	Rev
C	OAK14 Chief River DIS	A00

Date: Wednesday, September 05, 2012 Sheet 43 of 105

SSID = CPU.Regulator

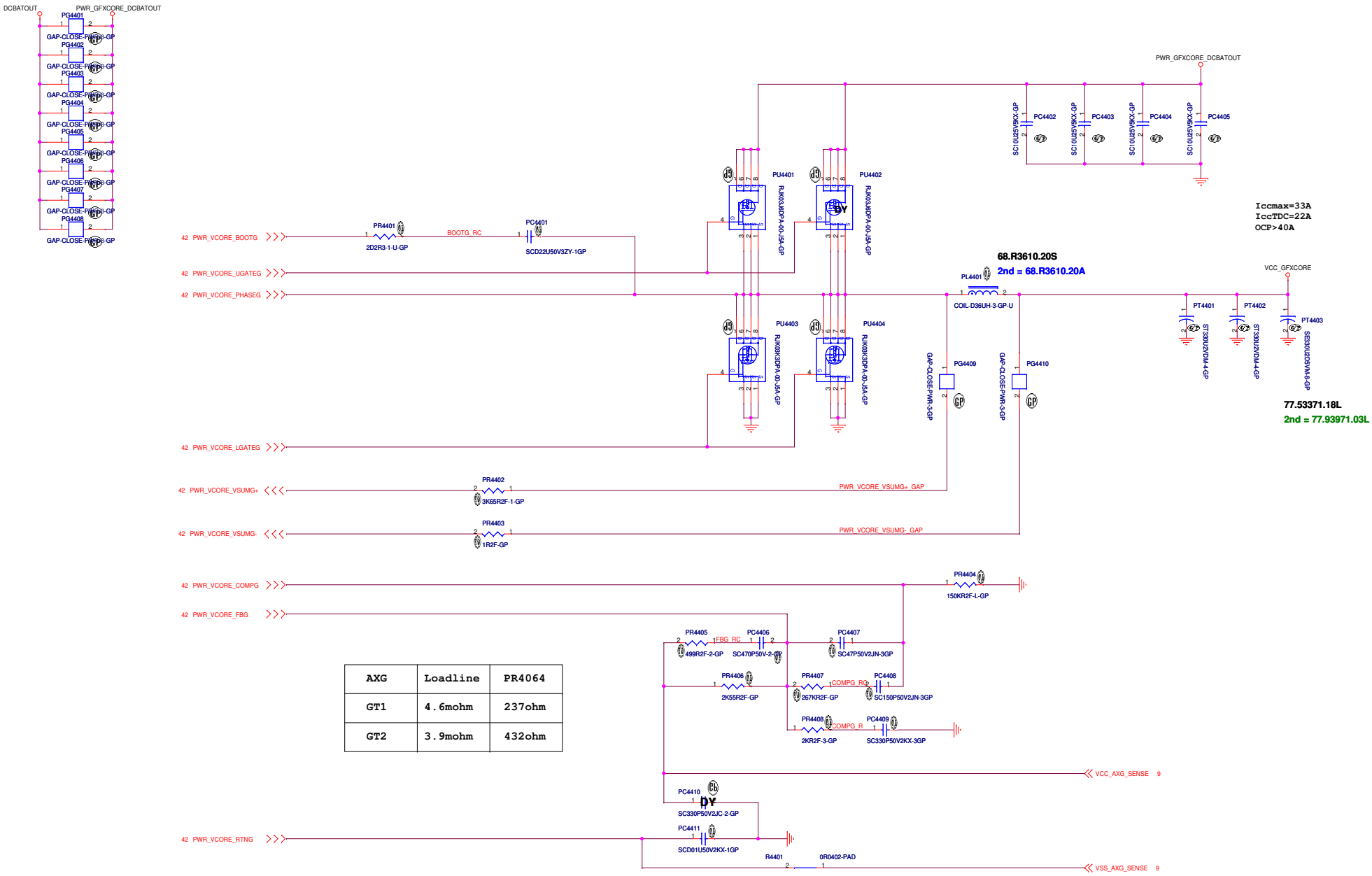

AXG	Loadline	PR4064
GT1	4.6mohm	237ohm
GT2	3.9mohm	432ohm

I/P cap: 10U 25V K0805 X5R/ 78.10622.51L
Inductor: CHIP CHK 0.36UH PCMC104T-R36MH 1.05mohm/ Isat =60A rms68.R3610.20S
O/P cap: CHIP CAP 330U 2V EEFSX0D331XE 3.5Arms Panasonic/79.33719.20L
H/S: RJK03J6DPA-00#J5A / 10mohm/13mOhm@4.5Vgs/ 84.00036.037
L/S: RJK03K3DPA-00#J5A / 4.9mohm/6.1mOhm@4.5Vgs/ 84.003K3.037

M14 DIS

Wistron Corporation
21F, 88, Sec.1, Hsin Tai Wu Rd., Hsichih,
Taipei Hsien 221, Taiwan, R.O.C.

Title: ISL95833_CPU_CORE(3/3)

Size	Document Number	Rev
C	OAK14 Chief River DIS	A00

Date: Wednesday, September 05, 2012 Sheet 44 of 105

SSID = PWR.Plane.Regulator_1p05v_pch/vccp_cpu

TPS51219 for 1D05V_VTT

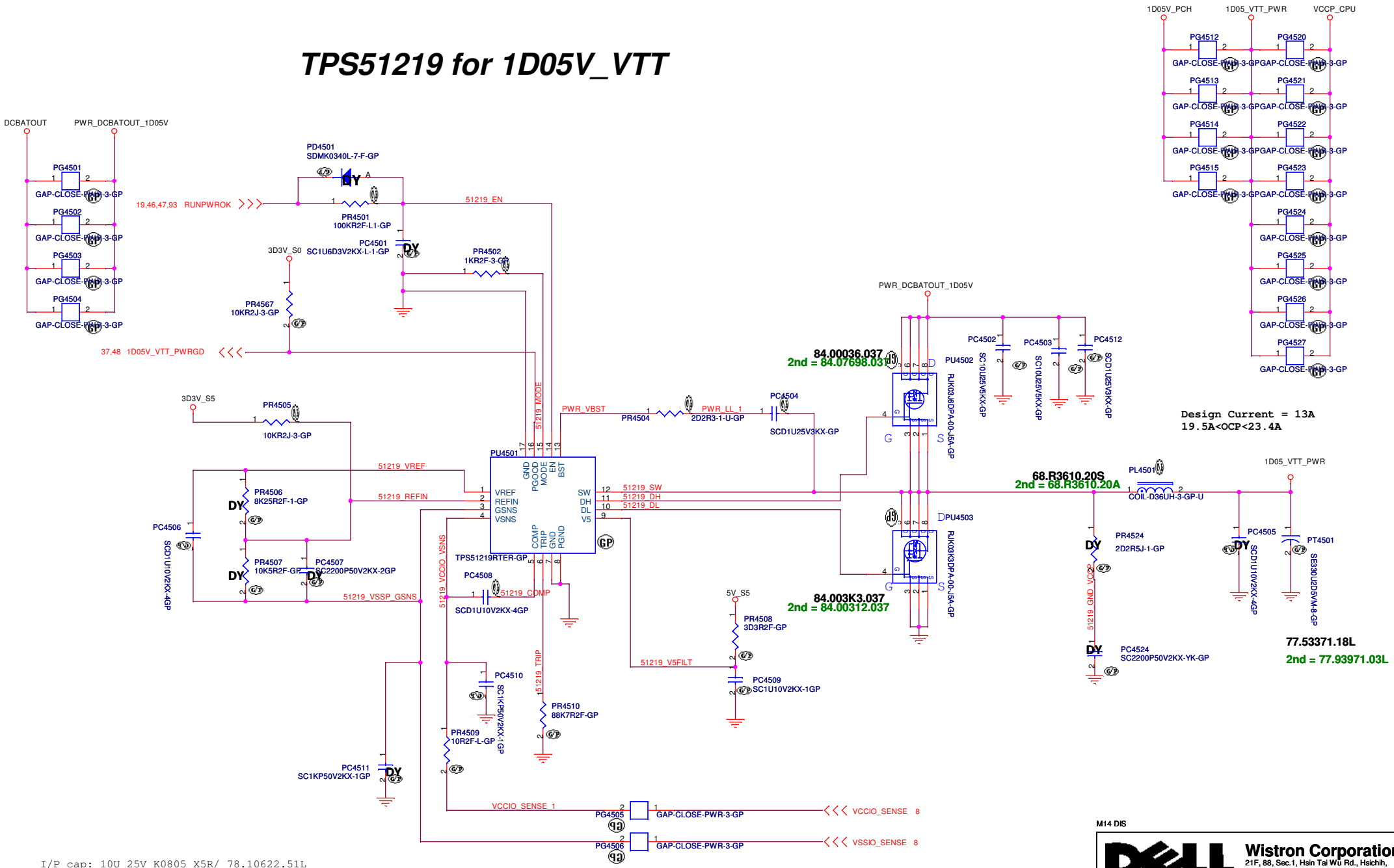

I/P cap: 10U 25V K0805 X5R/ 78.10622.51L
Inductor: CHIP CHK 0.36UH PCMC104T-R36MH 1.05mohm/ Isat =60A rms68.R3610.20S
O/P cap: CHIP CAP POL 330U 2.5V M 6.3*4.5 2.3Arms Matsuti/77.53371.18L
H/S: RJK03J6DPA-00#J5A / 10mohm/13mOhm@4.5Vgs/ 84.00036.037
L/S: RJK03K3DPA-00#J5A / 4.9mohm/6.1mOhm@4.5Vgs/ 84.003K3.037

M14 DIS

Wistron Corporation
21F, 88, Sec.1, Hsin Tai Wu Rd., Hsichih,
Taipei Hsien 221, Taiwan, R.O.C.

Title: TPS51219 1D05V_VTT

Size: A3 | Document Number: DNE40 14 CR DIS | Rev: A00

Date: Wednesday, September 05, 2012 | Sheet 45 of 105

SSID = PWR.Plane.Regulator 1p5v0p75v

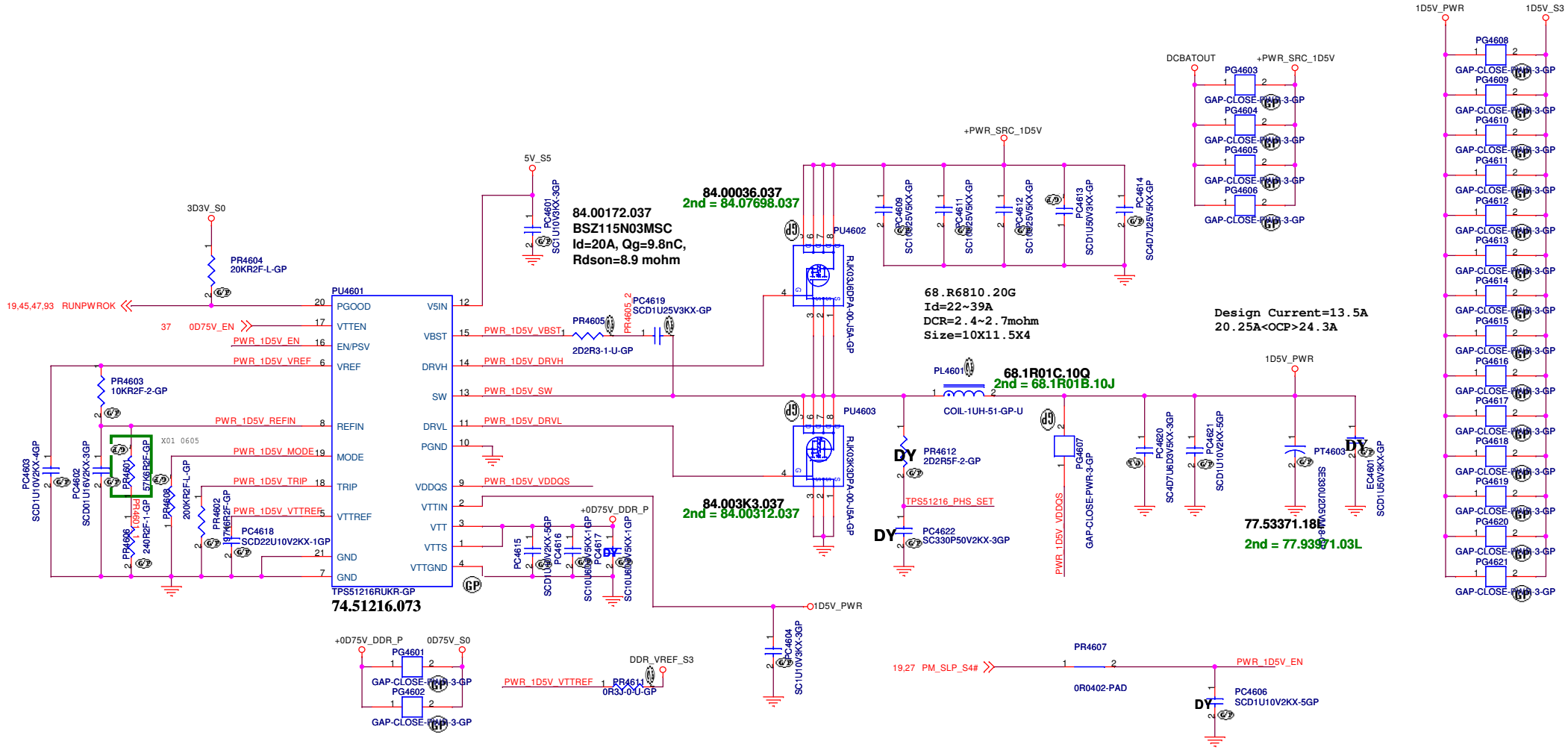

State	S3	S5	VDDR	VTTREF	VTT
S0	Hi	Hi	On	On	On
S3	Lo	Hi	On	On	Off(Hi-Z)
S4/S5	Lo	Lo	Off	Off	Off

MODE

PR4608	Frequency	Discharge Mode
200k ohm	400kHz	Tracking Discharge
100k ohm	300kHz	
68k ohm	300kHz	Non-tracking Discharge
47k ohm	400kHz	

I/P cap: 10U 25V K0805 X5R/ 78.10622.51L
Inductor: CHIP CHOKE 1.0UH PCMB104T-1R0M/ 3.3mohm/ Isat =28A rms /68.1R01C.10Q
O/P cap: CHIP CAP POL 330U 2.5V M 6.3*4.5 2.3Arms Matsuti/77.53371.18L
H/S: RJK03J6DPA-00#J5A / 10mohm/13mOhm@4.5Vgs/ 84.00036.037
L/S: RJK03K3DPA-00#J5A / 4.9mohm/6.1mOhm@4.5Vgs/ 84.003K3.037

M14 DIS

Wistron Corporation
21F, 88, Sec.1, Hsin Tai Wu Rd., Hsichih,
Taipei Hsien 221, Taiwan, R.O.C.

Title: TPS51216_+1.5V_SUS

Size: A3 | Document Number: OAK14 Chief River DIS | Rev: A00

Date: Wednesday, September 05, 2012 | Sheet 46 of 105

SYW231 for 1D8V_S0

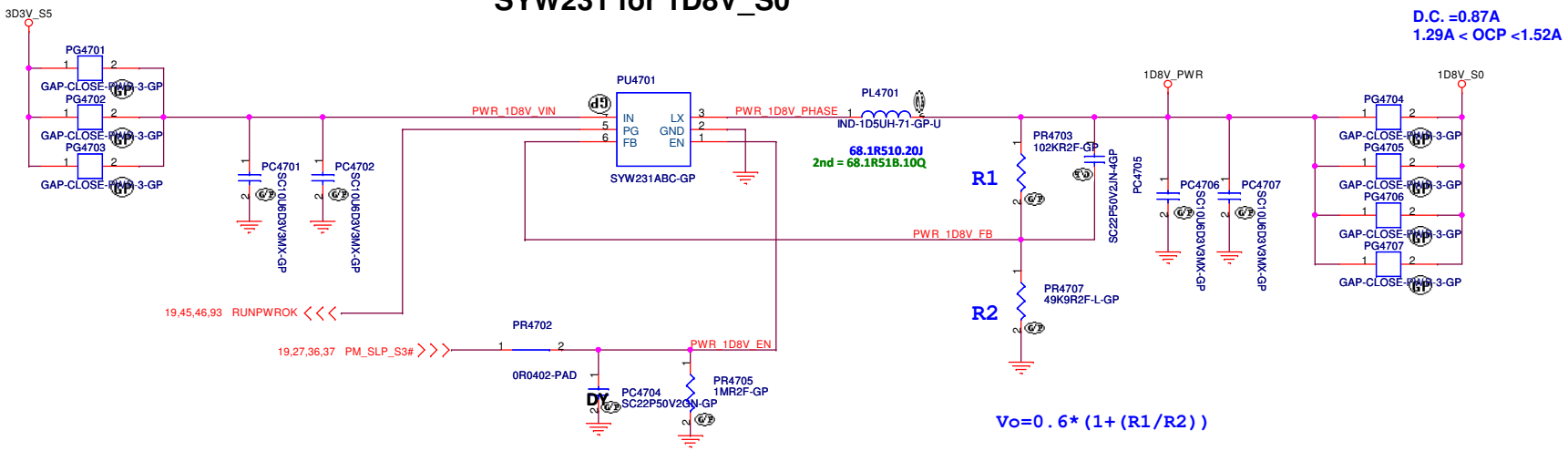

D.C. =0.87A
1.29A < OCP <1.52A

Vo=0.6*(1+(R1/R2))

M14 DIS

Wistron Corporation
21F, 88, Sec.1, Hsin Tai Wu Rd., Hsichih,
Taipei Hsien 221, Taiwan, R.O.C.

Title	SYW231_1D8V_S0	
Size A3	Document Number OAK14 Chief River DIS	Rev A00
Date: Wednesday, September 05, 2012	Sheet 47 of 105	

SSID = PWR.Plane.Regulator_0p85v

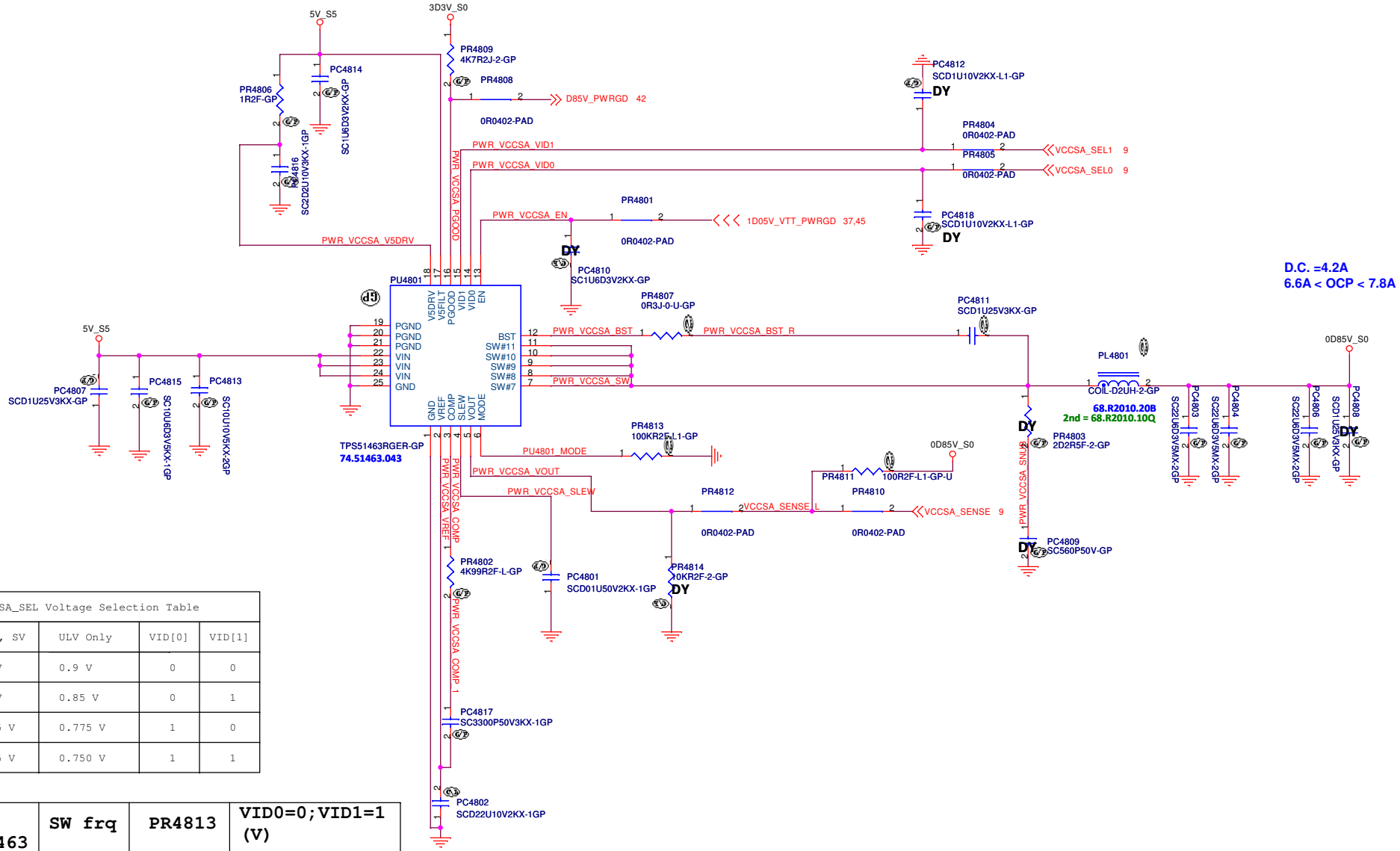

VCCSA_SEL Voltage Selection Table			
XE, QC, SV	ULV Only	VID[0]	VID[1]
0.9 V	0.9 V	0	0
0.8 V	0.85 V	0	1
0.725 V	0.775 V	1	0
0.675 V	0.750 V	1	1

	SW frq	PR4813	VID0=0;VID1=1 (V)
TPS51463 for ULV	700KHz	100K	0.85
	1MHz	Open	0.85

M14 DIS

Wistron Corporation
21F, 88, Sec.1, Hsin Tai Wu Rd., Hsichih, Taipei Hsien 221, Taiwan, R.O.C.

Title: TPS51463_VCCSA

Size: A3 | Document Number: OAK14 Chief River DIS | Rev: A00

Date: Wednesday, September 05, 2012 | Sheet 48 of 105

SSID = VIDEO

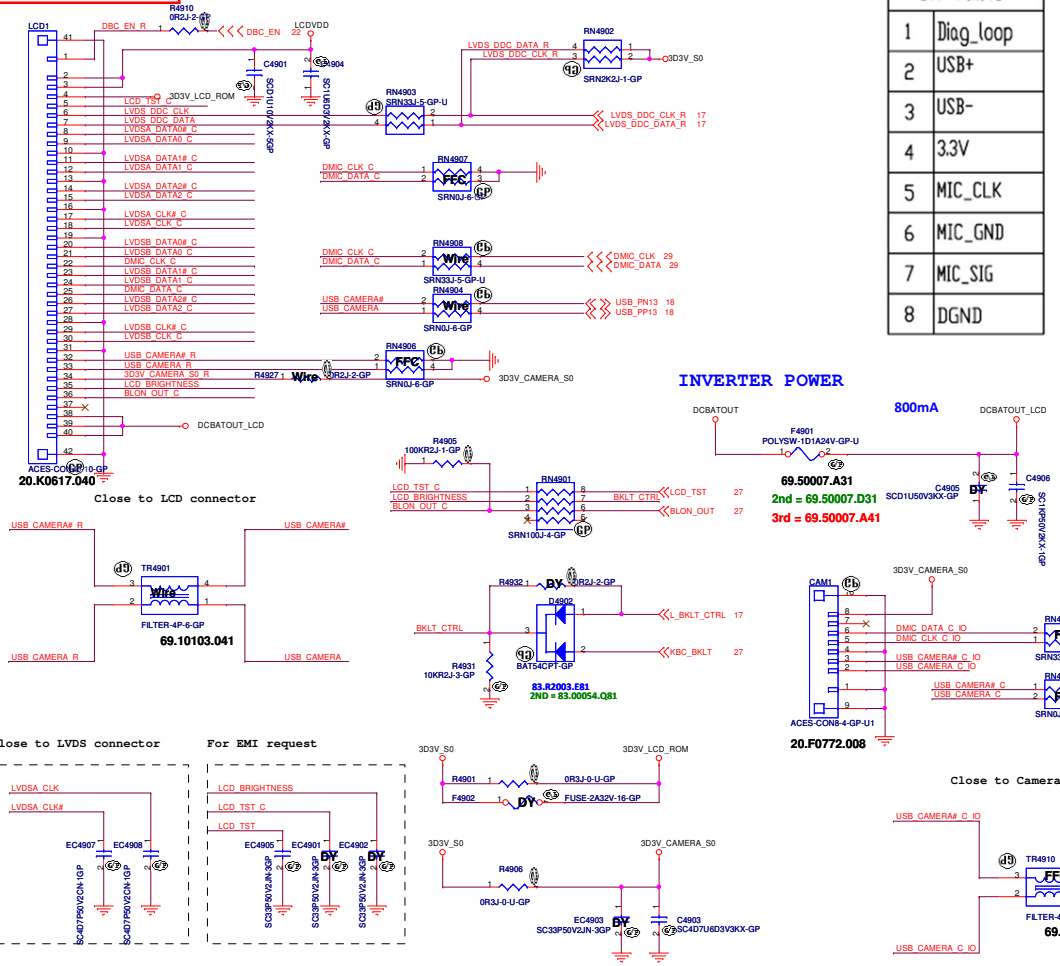

CN Table	
1	Diag_loop
2	USB+
3	USB-
4	3.3V
5	MIC_CLK
6	MIC_GND
7	MIC_SIG
8	DGND

MB Connecter		是否接線	Wire (40 PIN)	FFC(40 PIN)
Pin 10	GND	Y	Pin 10(GND 實體線)	Pin 10 GND
Pin 13	GND	Y	Pin 13(GND 實體線)	Pin 13 GND
Pin 16	GND	Y	Pin 16 (GND實體線)	Pin 16 GND
Pin 19	GND	Y	Camera Module Pin 6 DMIC_GND(實體線)	Pin 19 GND
Pin 22	GND	Y	Camera Module Pin 5 AUD_DMIC_CLK	Pin 22 GND
Pin 25	GND	Y	Camera Module Pin 7 AUD_DMIC_IN0	o
Pin 28	GND	Y	Camera Module Pin 8 CCD GND(實體線)	Pin 28 GND
Pin 31	GND	Y	Pin 31 (實體線)	Pin 31 GND
Pin 32	GND	Y	Camera Module Pin 3 USB_CAMERA#	Pin 32 GND
Pin 33	GND	Y	Camera Module Pin 2 USB_CAMERA	Pin 33 GND
Pin 34	3D3V_CAMERA_S0	Y	Camera Module Pin 4 3D3V_CAMERA_S0	NC(0 ohm DY)

PIN	MB Connecter	是否接線	PIN	Camera Module Conn
1	DGND	Y	8	DGND
2	USB_CAMERA_C (USB+)	Y	2	USB_CAMERA_C (USB+)
3	USB_CAMERA#_C (USB-)	Y	3	USB_CAMERA#_C (USB-)
4	DMIC_GND	Y	6	DMIC_GND
5	DMIC_CLK_C	Y	5	DMIC_CLK_C
6	DMIC_DATA_C	Y	7	DMIC_DATA_C
7	NC	N	1	NC
8	3D3V_CAMERA_S0	Y	4	3D3V_CAMERA_S0

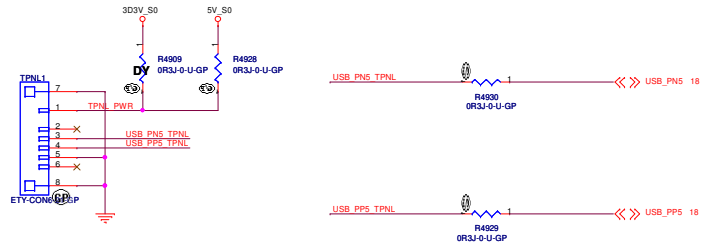

SSID = VIDEO

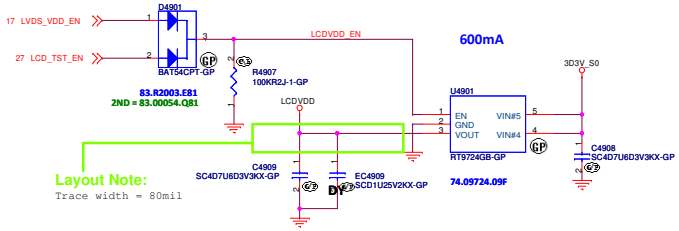

M14 DIS

Wistron Corporation
21F, 88, Sec.1, Hsin Tai Wu Rd., Hsichih,
Taipei Hsien 221, Taiwan, R.O.C.

Title: LCD Connector

Size: A2 | Document Number: OAK14 Chief River DIS | Rev: A00

Date: Wednesday, September 05, 2012 | Sheet 49 of 105

(Blanking)

M14 DIS

Wistron Corporation
21F, 88, Sec.1, Hsin Tai Wu Rd., Hsichih,
Taipei Hsien 221, Taiwan, R.O.C.

Title: CRT Connector

Size: A3 | Document Number: OAK14 Chief River DIS | Rev: A00

Date: Wednesday, September 05, 2012 | Sheet 50 of 105

SSID = VIDEO

HDMI Level Shifter

17 HDMI_CLK_R#
17 HDMI_CLK_R
17 HDMI_DATA0_R#
17 HDMI_DATA0_R
17 HDMI_DATA1_R#
17 HDMI_DATA1_R
17 HDMI_DATA2_R#
17 HDMI_DATA2_R

C5103 SCD1U10V2KX-5GP — HDMI_CLK_R_C#
C5104 SCD1U10V2KX-5GP — HDMI_CLK_R_C
C5105 SCD1U10V2KX-5GP — HDMI_DATA0_R_C#
C5106 SCD1U10V2KX-5GP — HDMI_DATA0_R_C
C5110 SCD1U10V2KX-5GP — HDMI_DATA1_R_C#
C5107 SCD1U10V2KX-5GP — HDMI_DATA1_R_C
C5108 SCD1U10V2KX-5GP — HDMI_DATA2_R_C#
C5109 SCD1U10V2KX-5GP — HDMI_DATA2_R_C

RN5106 SRN680J-GP
RN5107 SRN680J-GP

HDMI_PLL_GND
R5123 0R2J-2-GP
Q5105 2N7002BK-GP
84.07002.I31
2nd = 84.2N702.W31
3rd = 84.2N702.J31
5V_S0
R5113 100KR2J-1-GP

HDMI_CLK_R_C# — R5101 0R0402-PAD — HDMI_CLK_R_C#_CON
R5114 150R2F-1-GP
HDMI_CLK_R_C — R5102 0R0402-PAD — HDMI_CLK_R_C_CON

HDMI_DATA0_R_C# — R5103 0R0402-PAD — HDMI_DATA0_R_C#_CON
R5116 150R2F-1-GP
HDMI_DATA0_R_C — R5104 0R0402-PAD — HDMI_DATA0_R_C_CON

HDMI_DATA2_R_C# — R5105 0R0402-PAD — HDMI_DATA2_R_C#_CON
R5115 150R2F-1-GP
HDMI_DATA2_R_C — R5106 0R0402-PAD — HDMI_DATA2_R_C_CON

HDMI_DATA1_R_C# — R5107 0R0402-PAD — HDMI_DATA1_R_C#_CON
R5117 150R2F-1-GP
HDMI_DATA1_R_C — R5108 0R0402-PAD — HDMI_DATA1_R_C_CON

HDMI CONN

HDMI1
HDMI_DATA2_R_C_CON
HDMI_DATA2_R_C#_CON
HDMI_DATA1_R_C_CON
HDMI_DATA1_R_C#_CON
HDMI_DATA0_R_C_CON
HDMI_DATA0_R_C#_CON
HDMI_CLK_R_C_CON
HDMI_CLK_R_C#_CON
DDC_CLK_HDMI
DDC_DATA_HDMI
SKT-HDMI23P-2-GP
22.10296.311

5V_S0
D5101 BAW56-2-GP
83.00056.G11
2nd = 83.00056.N11
DDC_CLK_PH1
DDC_DATA_PH2
RN5101 SRN2K2J-1-GP

3D3V_S0
Q5104 2N7002KDW-GP
17 PCH_HDMI_CLK
17 PCH_HDMI_DATA
DDC_CLK_HDMI
DDC_DATA_HDMI

84.2N702.A3F
2nd = 84.DM601.03F
3rd = 84.2N702.E3F
4th = 84.2N702.F3F

5V_S0 — R5109 0R0603-PAD — 5V_HDMI_S0 — F5101 FUSE-1D1A6V-4GP-U — 5V_HDMI_S0_R
69.50007.691
2nd = 69.50007.771

5V_HDMI_S0_R
C5102 SCD1U10V2KX-5GP
HPD_HDMI_CON

3D3V_S0
Q5102 PMBS3904-1-GP
R5111 150KR2F-L-GP
HDMI_HPD_B
R5125 0R0402-PAD
17 HDMI_PCH_DET
HDMI_HPD_E
84.03904.L06
2nd = 84.03904.P11
R5110 200KR2J-L1-GP
R5112 10KR2J-3-GP

M14 DIS

Wistron Corporation
21F, 88, Sec.1, Hsin Tai Wu Rd., Hsichih,
Taipei Hsien 221, Taiwan, R.O.C.

Title: HDMI Level Shifter/Connector
Size: A3
Document Number: OAK14 Chief River DIS
Rev: A00
Date: Wednesday, September 05, 2012
Sheet 51 of 105

(Blanking)

M14 DIS

Wistron Corporation
21F, 88, Sec.1, Hsin Tai Wu Rd., Hsichih,
Taipei Hsien 221, Taiwan, R.O.C.

Title: Reserved

Size: A3 | Document Number: OAK14 Chief River DIS | Rev: A00

Date: Wednesday, September 05, 2012 | Sheet 52 of 105

(Blanking)

M14 DIS

Wistron Corporation
21F, 88, Sec.1, Hsin Tai Wu Rd., Hsichih,
Taipei Hsien 221, Taiwan, R.O.C.

Title: LVDS_Switch

Size: A3 | Document Number: OAK14 Chief River DIS | Rev: A00

Date: Wednesday, September 05, 2012 | Sheet 53 of 105

(Blanking)

M14 DIS

Wistron Corporation
21F, 88, Sec.1, Hsin Tai Wu Rd., Hsichih,
Taipei Hsien 221, Taiwan, R.O.C.

Title: *Reserved*

Size: A3 | Document Number: *OAK14 Chief River DIS* | Rev: *A00*

Date: Wednesday, September 05, 2012 | Sheet 54 of 105

SSID = User.Interface

(Blanking)

M14 DIS

Wistron Corporation
21F, 88, Sec.1, Hsin Tai Wu Rd., Hsichih,
Taipei Hsien 221, Taiwan, R.O.C.

Title: ITP/Fan Connector

Size: A3 | Document Number: OAK14 Chief River DIS | Rev: A00

Date: Wednesday, September 05, 2012 | Sheet 55 of 105

SSID = SATA

SATA HDD Connector

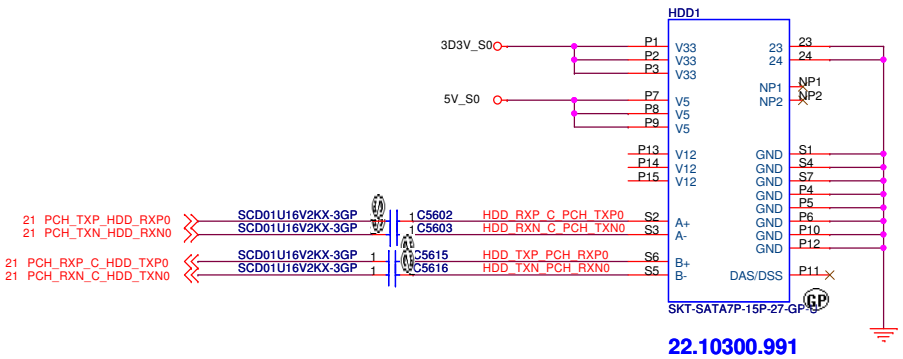

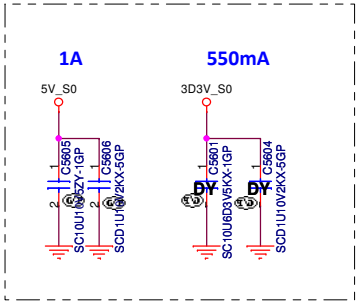

Close to HDD1

ODD Connector

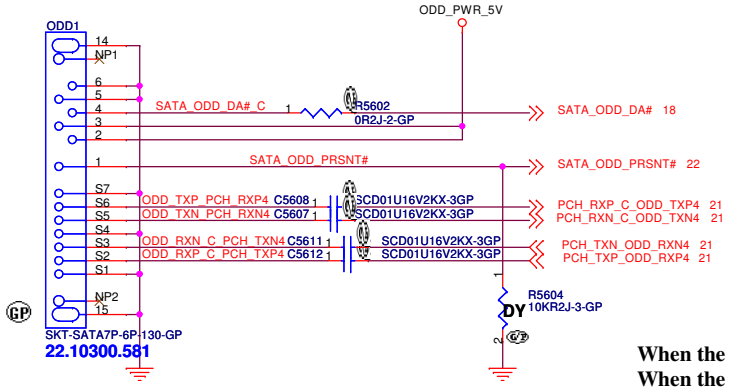

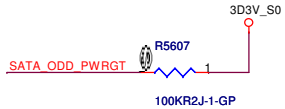

follow CKL1.5

SUPPORT ZERO SATA ODD

SATA Zero Power ODD

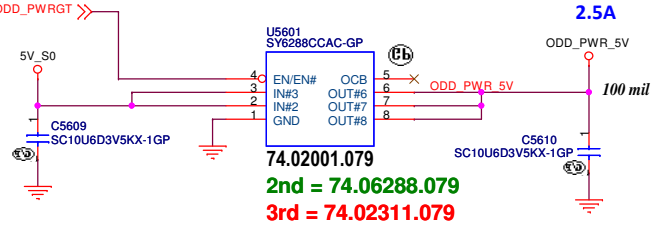

Current limit
Active High
typ =>2.5A

When the drive is powered on, the FET to the MD/DA pin drive is OFF.
When the drive is powered off, the FET to the MD/DA pin is ON

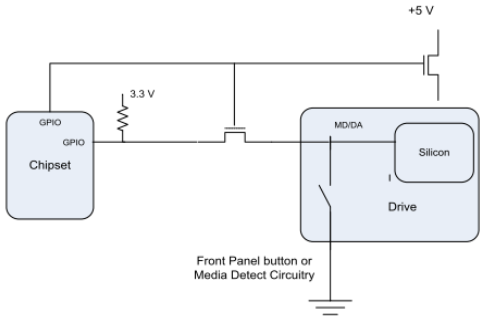

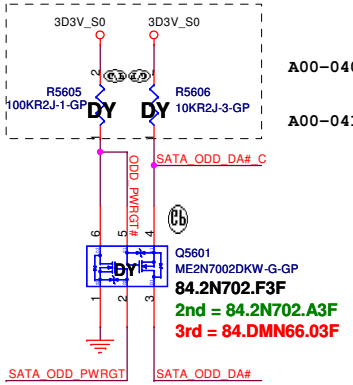

A00-0408 Add R5606 to pull high 3.3V_S0
Change pull high to 3.3V_S0

A00-0415 Dummy R5606

M14 DIS

Wistron Corporation
21F, 88, Sec.1, Hsin Tai Wu Rd., Hsichih,
Taipei Hsien 221, Taiwan, R.O.C.

Title: HDD/ODD

Size: A3 | Document Number: OAK14 Chief River DIS | Rev: A00

Date: Wednesday, September 05, 2012 | Sheet 56 of 105

SSID = ESATA

(Blanking)

M14 DIS

Wistron Corporation
21F, 88, Sec.1, Hsin Tai Wu Rd., Hsichih,
Taipei Hsien 221, Taiwan, R.O.C.

Title: ESATA

Size: A3 | Document Number: OAK14 Chief River DIS | Rev: A00

Date: Wednesday, September 05, 2012 | Sheet 57 of 105

SSID = AUDIO

X01 0605

Speaker

Layout Note:
trace width=30mil
R5801~R5804 and EC5804~EC5806
near codec as possible

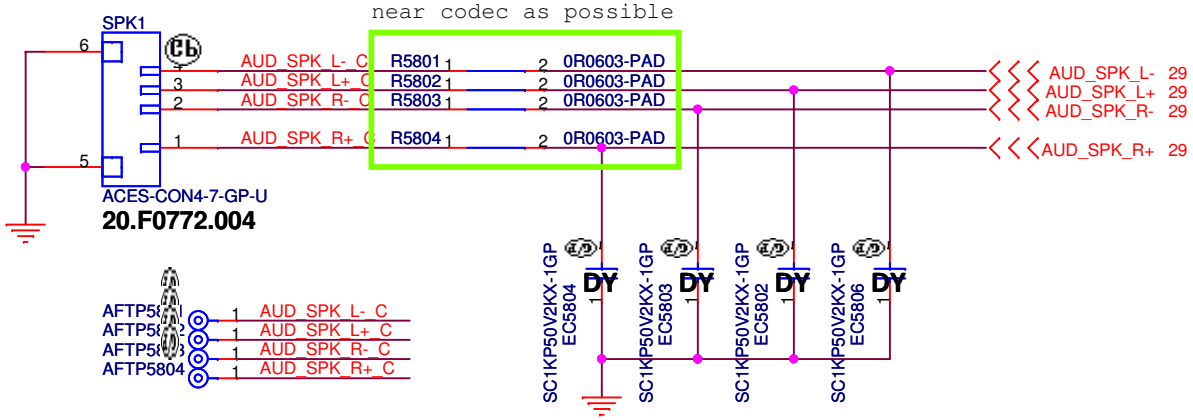

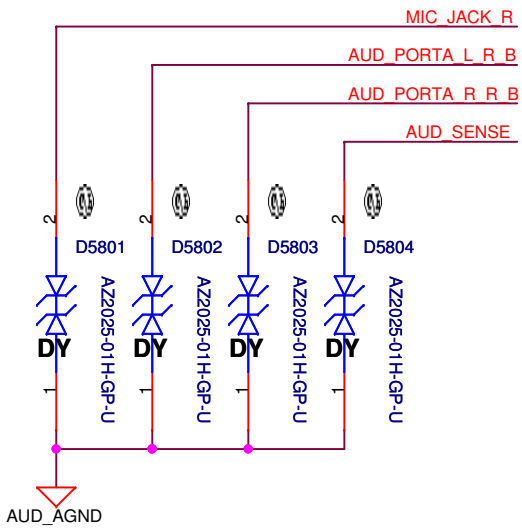

Combo Jack

change to 22.10270.P81, but symble not change

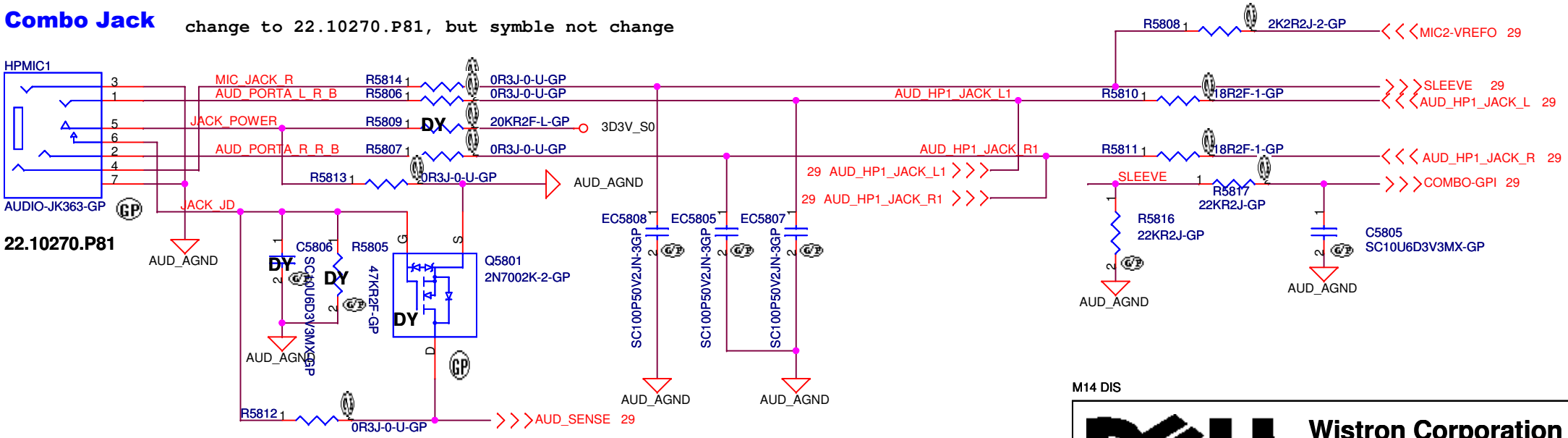

M14 DIS

Wistron Corporation
21F, 88, Sec.1, Hsin Tai Wu Rd., Hsichih,
Taipei Hsien 221, Taiwan, R.O.C.

Title: ***Speaker/HPMIC CONN***

Size	Document Number	Rev
A4	***OAK14 Chief River DIS***	***A00***

Date: Wednesday, September 05, 2012 Sheet 58 of 105

SSID = LOM

LAN TransFormer

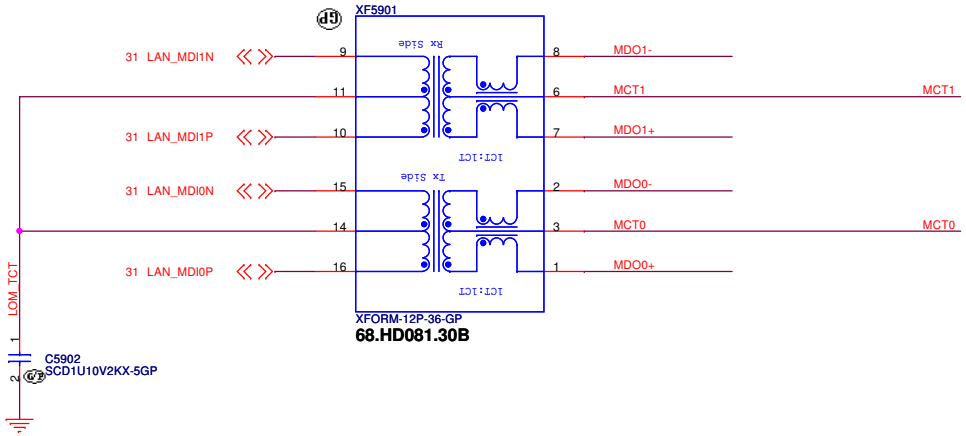

X01 0605

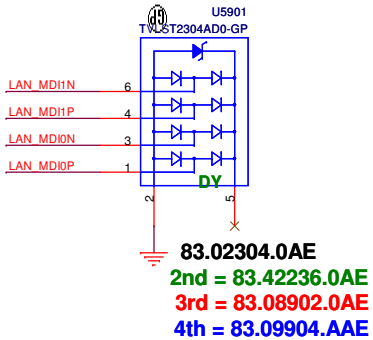

RJ45

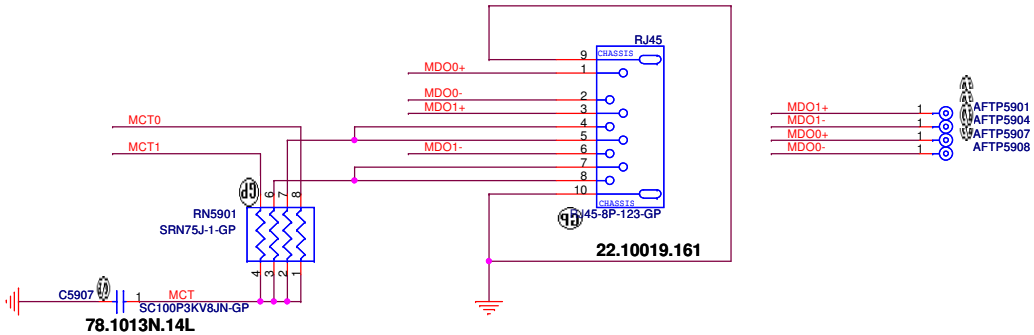

<Core Design>

Wistron Corporation
21F, 88, Sec.1, Hsin Tai Wu Rd., Hsichih,
Taipei Hsien 221, Taiwan, R.O.C.

Title: XFOM&RJ45

Size: A3 | Document Number: OAK14 Chief River DIS | Rev: A00

Date: Wednesday, September 05, 2012 | Sheet 59 of 105

SSID = Flash.ROM

SPI Flash ROM(8M) for PCH

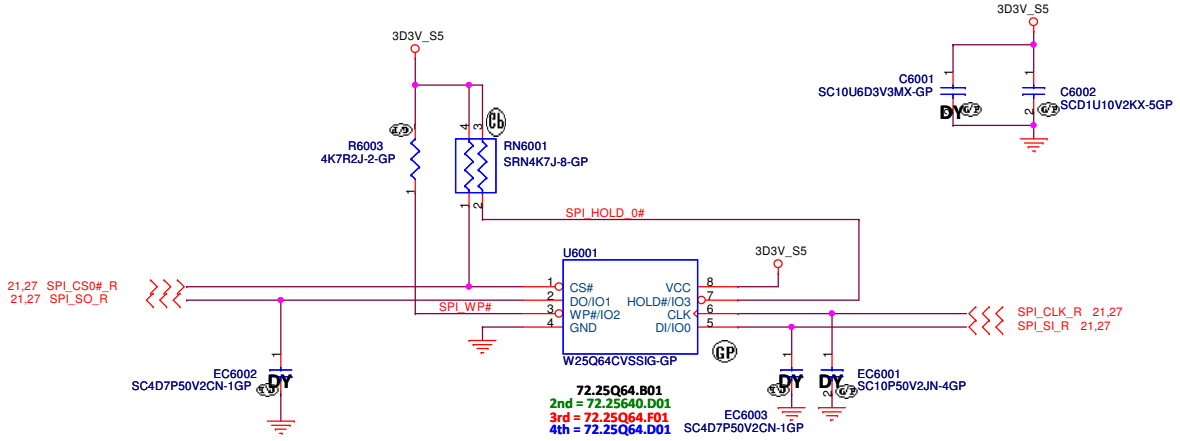

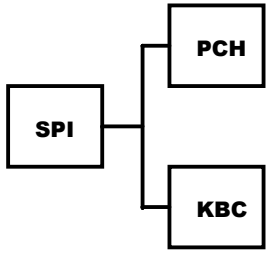

Layout Note:

```
KBC----10"----PCH
KBC----1.5"~6.5"----SPI
PCH----0.5"~6.5"----SPI
```

SSID = RBATT

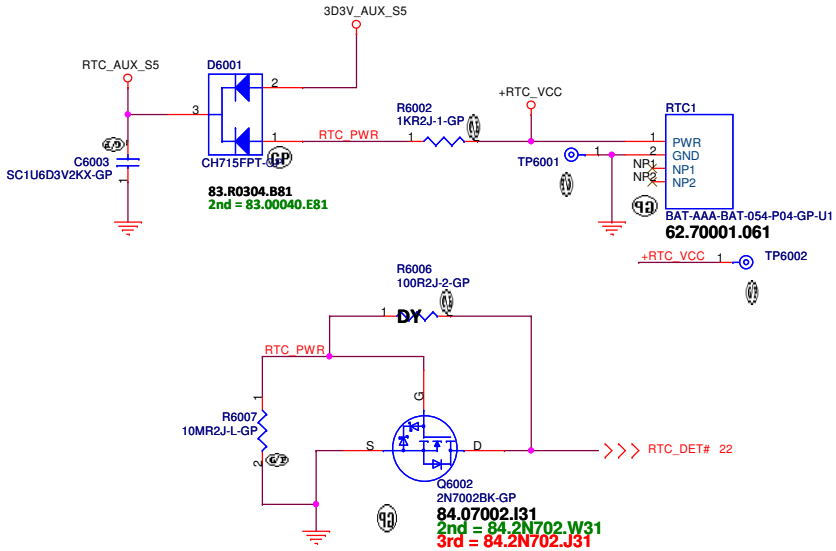

M14 DIS

Wistron Corporation
21F, 88, Sec.1, Hsin Tai Wu Rd., Hsichih,
Taipei Hsien 221, Taiwan, R.O.C.

Title		
	Flash/RTC	
Size A3	Document Number *OAK14 Chief River DIS*	Rev *A00*
Date: Wednesday, September 05, 2012	Sheet 60 of 105	

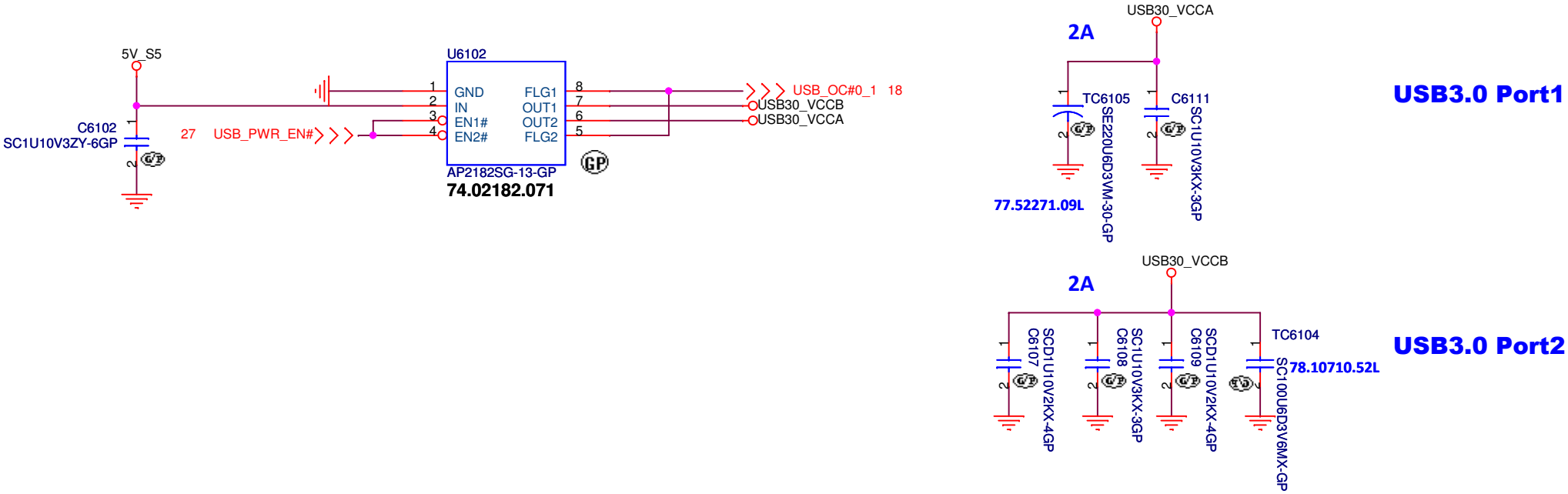

Right USB Power x1

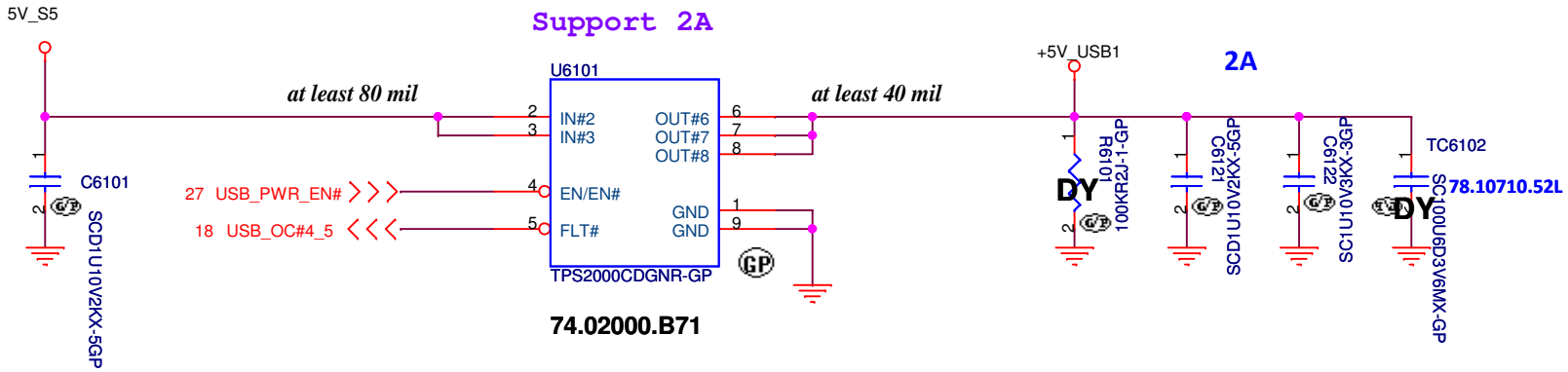

M14 DIS

Wistron Corporation
21F, 88, Sec.1, Hsin Tai Wu Rd., Hsichih,
Taipei Hsien 221, Taiwan, R.O.C.

Title	USB Power SW	
Size	Document Number: OAK14 Chief River DIS	Rev: A00
Date: Wednesday, September 05, 2012	Sheet 61 of 105	

SSID = USB

USB3.0 Port1

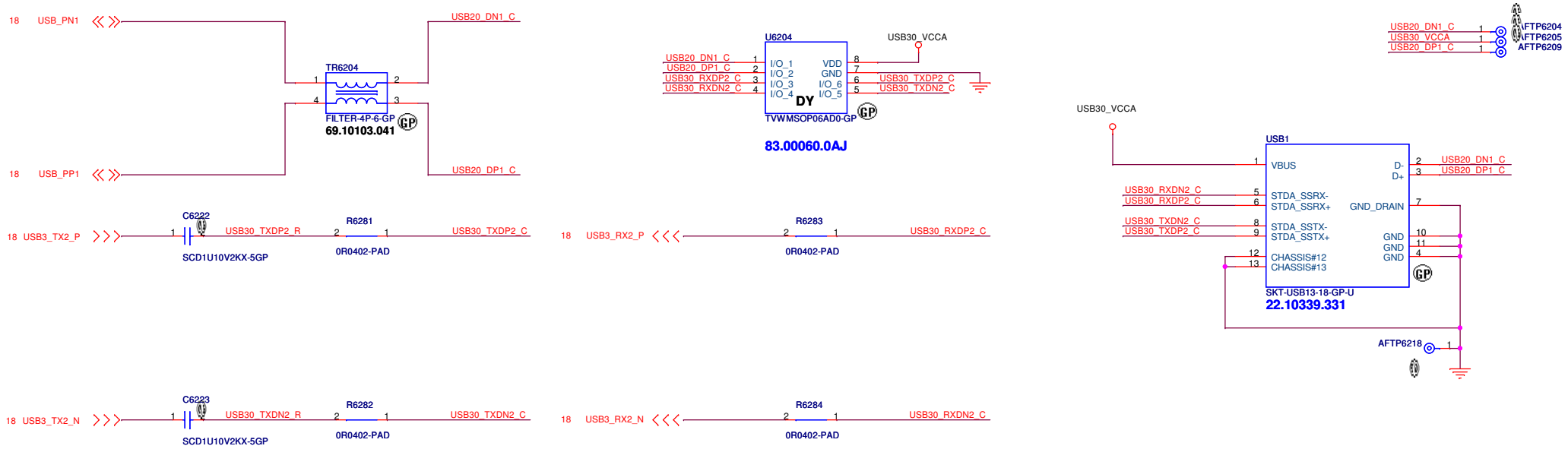

USB3.0 Port2

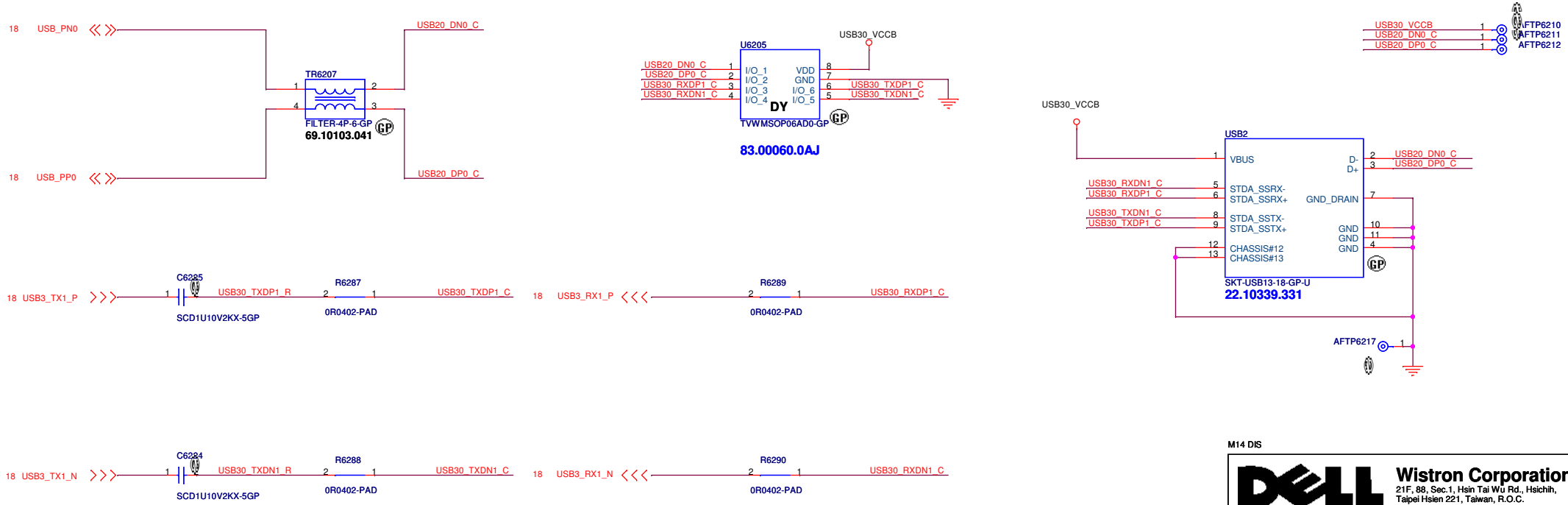

M14 DIS

Wistron Corporation
21F, 88, Sec.1, Hsin Tai Wu Rd., Hsichih,
Taipei Hsien 221, Taiwan, R.O.C.

Title: **USB 3.0**

Size: A3 | Document Number: **OAK14 Chief River DIS** | Rev: **A00**

Date: Wednesday, September 05, 2012 | Sheet 62 of 105

SSID = USB

(Blanking)

M14 DIS

Wistron Corporation
21F, 88, Sec.1, Hsin Tai Wu Rd., Hsichih,
Taipei Hsien 221, Taiwan, R.O.C.

Title: USB3.0 PORT

Size: A3 | Document Number: OAK14 Chief River DIS | Rev: A00

Date: Wednesday, September 05, 2012 | Sheet 63 of 105

(Blanking)

M14 DIS

Wistron Corporation
21F, 88, Sec.1, Hsin Tai Wu Rd., Hsichih,
Taipei Hsien 221, Taiwan, R.O.C.

Title: RESERVED

Size: A3 | Document Number: OAK14 Chief River DIS | Rev: A00

Date: Wednesday, September 05, 2012 | Sheet 64 of 105

SSID = Wireless

Mini Card Connector(802.11a/b/g)

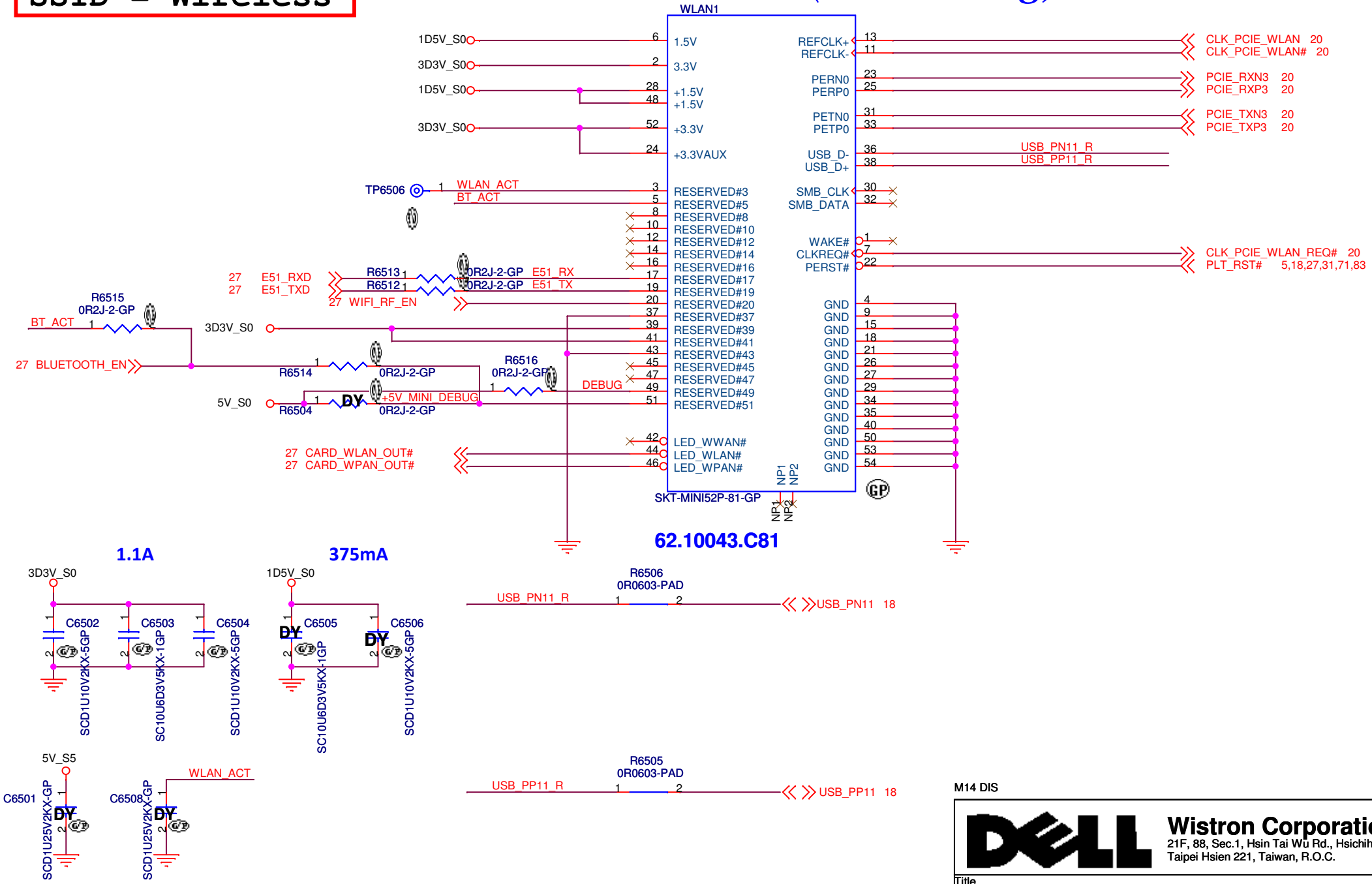

M14 DIS

Wistron Corporation
21F, 88, Sec.1, Hsin Tai Wu Rd., Hsichih,
Taipei Hsien 221, Taiwan, R.O.C.

Title: **MINICARD(WLAN)/ITP CONN**

Size	Document Number	Rev
A4	OAK14 Chief River DIS	A00

Date: Wednesday, September 05, 2012 Sheet 65 of 105

(Blanking)

M14 DIS

Wistron Corporation
21F, 88, Sec.1, Hsin Tai Wu Rd., Hsichih,
Taipei Hsien 221, Taiwan, R.O.C.

Title: Reserved

Size: A3 | Document Number: OAK14 Chief River DIS | Rev: A00

Date: Wednesday, September 05, 2012 | Sheet 66 of 105

(Blanking)

M14 DIS

Wistron Corporation
21F, 88, Sec.1, Hsin Tai Wu Rd., Hsichih,
Taipei Hsien 221, Taiwan, R.O.C.

Title: Reserved

Size: A3 | Document Number: OAK14 Chief River DIS | Rev: A00

Date: Wednesday, September 05, 2012 | Sheet 67 of 105

SSID = User.Interface

FRONT POWER LED

Low actived from KBC GPIO

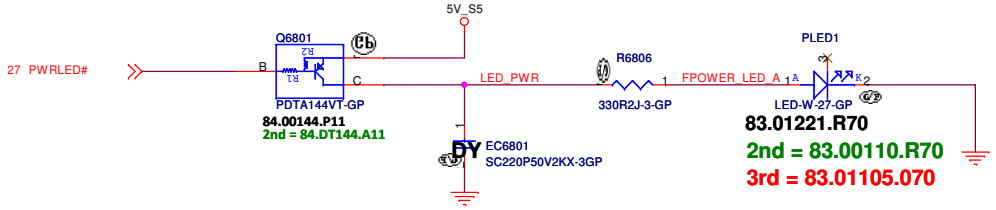

Wireless LED

Low actived from KBC GPIO

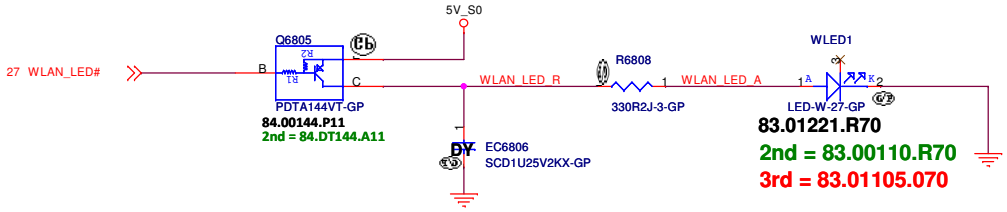

Place EC6806 near WLED1

SATA HDD LED(White)

Low actived from PCH GPIO

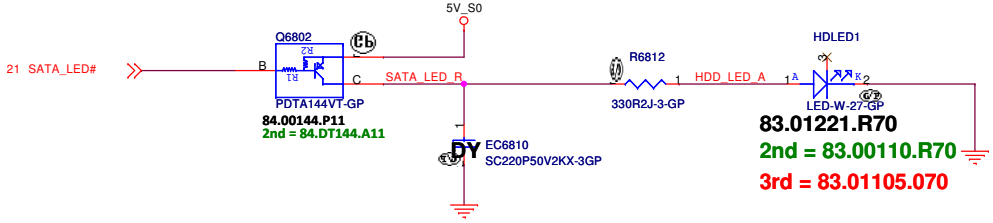

Power button

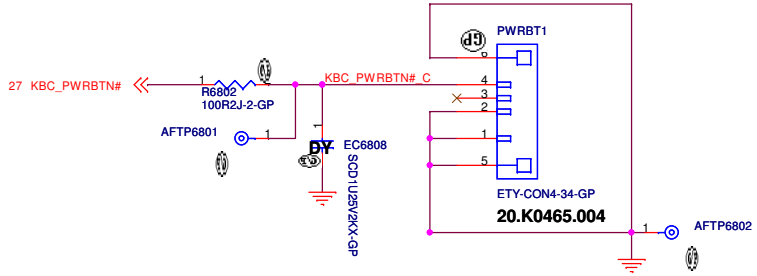

Battery LED1 (AMBER_LED)

Low actived from KBC GPIO

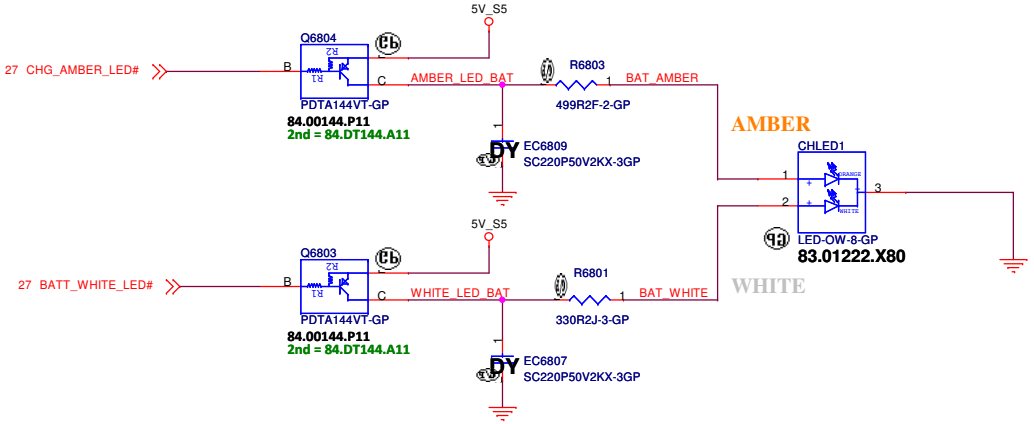

Battery LED2 (WHITE_LED)

Low actived from KBC GPIO

M14 DIS

Wistron Corporation
21F, 88, Sec.1, Hsin Tai Wu Rd., Hsichih,
Taipei Hsien 221, Taiwan, R.O.C.

Title	LED Bard/Power Button	
Size A3	Document Number OAK14 Chief River DIS	Rev A00
Date: Wednesday, September 05, 2012	Sheet 68 of 105	

SSID = KBC

Internal Keyboard Connector

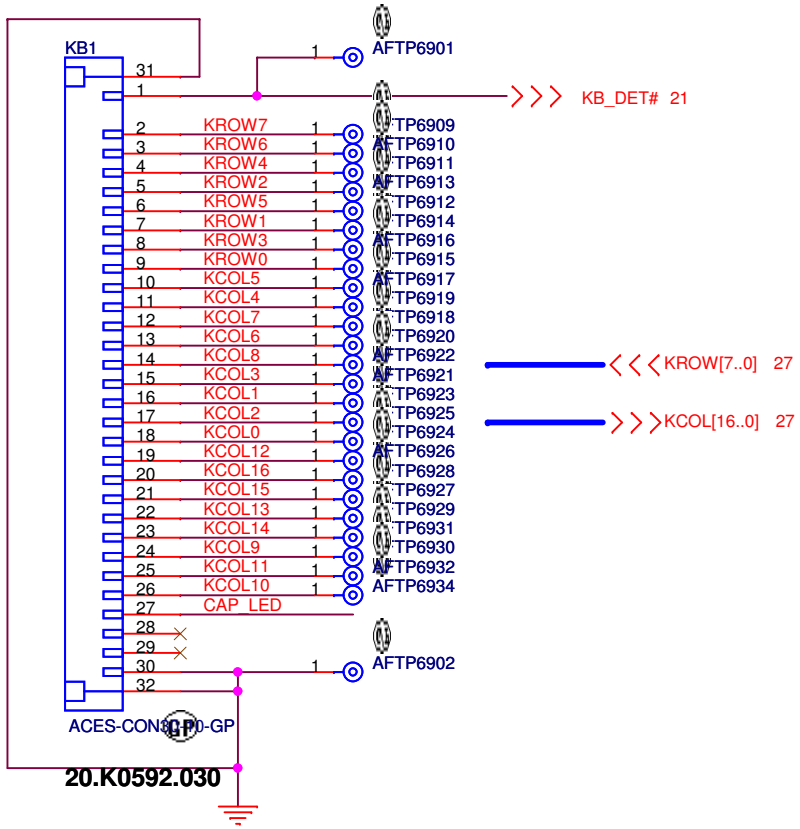

SSID = Touch.Pad

Touch Pad Connector

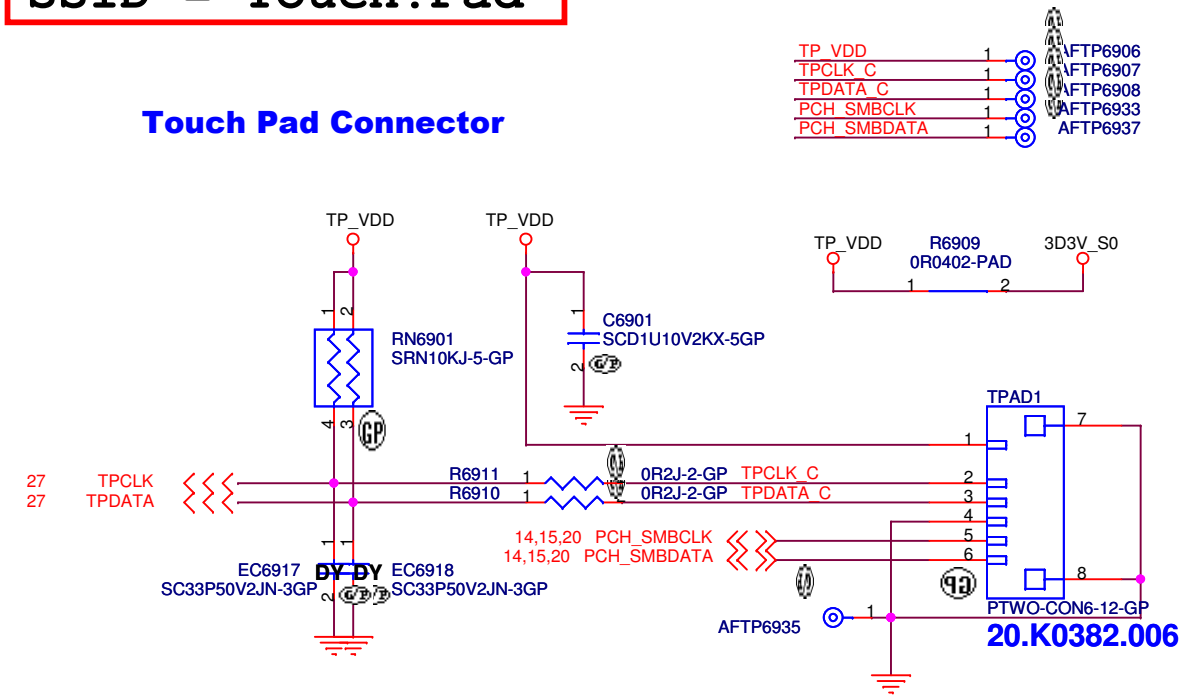

CAP LED Control

LOW actived from KBC GPIO

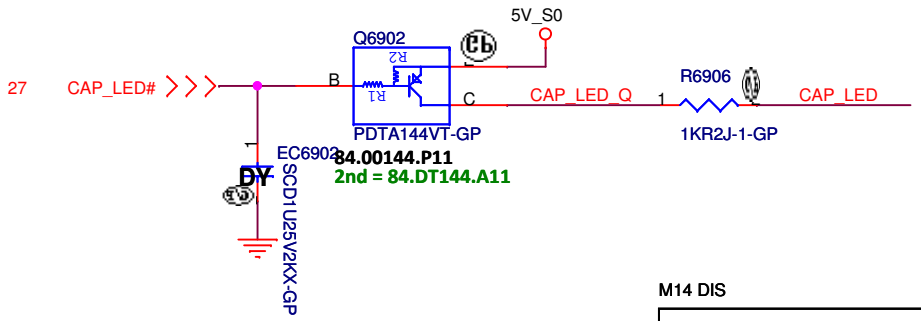

M14 DIS

Wistron Corporation
21F, 88, Sec.1, Hsin Tai Wu Rd., Hsichih,
Taipei Hsien 221, Taiwan, R.O.C.

Title	Key Board/Touch Pad	
Size A4	Document Number OAK14 Chief River DIS	Rev A00
Date: Wednesday, September 05, 2012	Sheet 69 of 105	

SSID = User.Interface

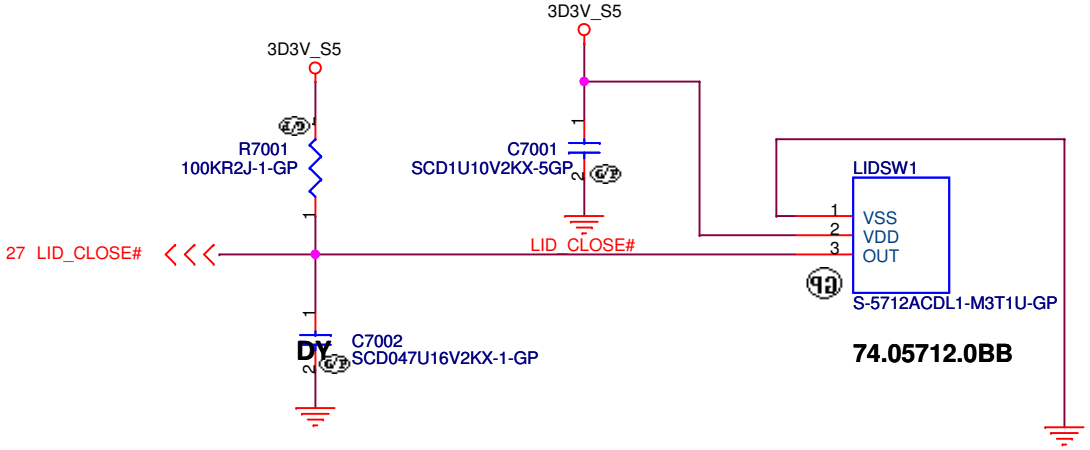

M14 DIS

Wistron Corporation
21F, 88, Sec.1, Hsin Tai Wu Rd., Hsichih,
Taipei Hsien 221, Taiwan, R.O.C.

Title: ***Hall Sensor***

Size	Document Number	Rev
A4	***OAK14 Chief River DIS***	***A00***

Date: Wednesday, September 05, 2012 Sheet 70 of 105

SSID = DEBUG PORT

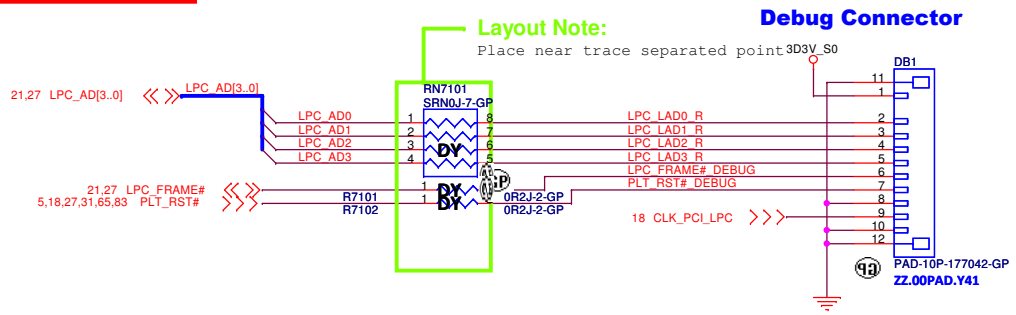

SSID = CPU

CPU XDP

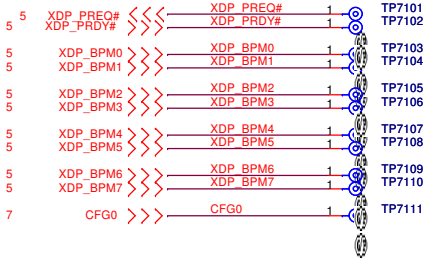

M14 DIS

Wistron Corporation
21F, 88, Sec.1, Hsin Tai Wu Rd., Hsichih,
Taipei Hsien 221, Taiwan, R.O.C.

Title		
	Dubug connector	
Size A3	Document Number *OAK14 Chief River DIS*	Rev *A00*
Date: Wednesday, September 05, 2012	Sheet 71 of 105	

(Blanking)

M14 DIS

Wistron Corporation
21F, 88, Sec.1, Hsin Tai Wu Rd., Hsichih,
Taipei Hsien 221, Taiwan, R.O.C.

Title: *Reserved*

Size	Document Number	Rev
A3	*OAK14 Chief River DIS*	*A00*

(Blanking)

M14 DIS

Wistron Corporation
21F, 88, Sec.1, Hsin Tai Wu Rd., Hsichih,
Taipei Hsien 221, Taiwan, R.O.C.

Title: Reserved

Size: A3 | Document Number: OAK14 Chief River DIS | Rev: A00

Date: Wednesday, September 05, 2012 | Sheet 73 of 105

SSID = SDIO

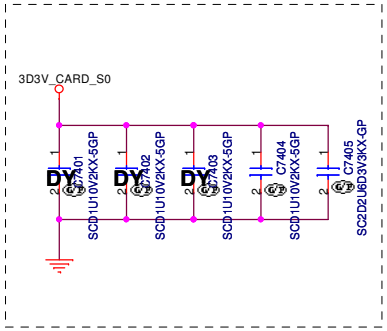

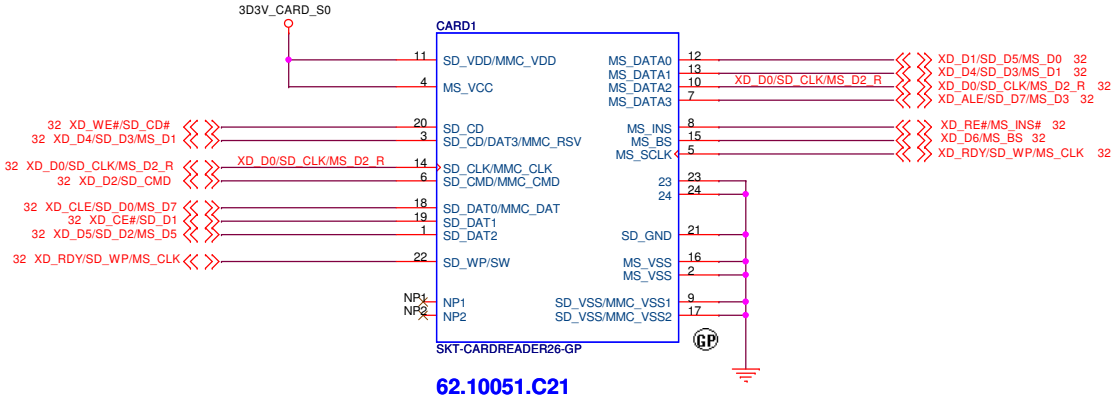

Close to Socket

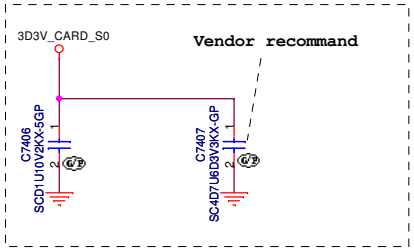

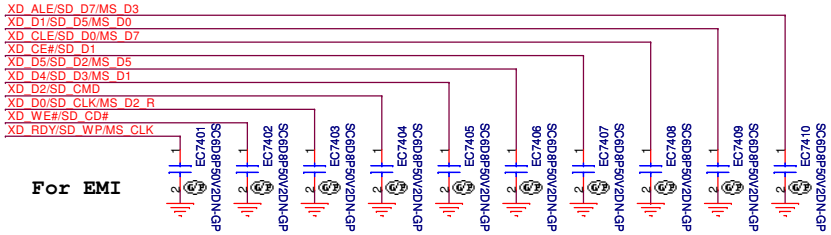

For EMI

M14 DIS

Wistron Corporation
21F, 88, Sec.1, Hsin Tai Wu Rd., Hsichih,
Taipei Hsien 221, Taiwan, R.O.C.

Title: SD/XD/MS/MMC Card CONN

Size: A3 | Document Number: OAK14 Chief River DIS | Rev: A00

Date: Wednesday, September 05, 2012 | Sheet 74 of 105

(Blanking)

M14 DIS

Wistron Corporation
21F, 88, Sec.1, Hsin Tai Wu Rd., Hsichih,
Taipei Hsien 221, Taiwan, R.O.C.

Title: Express Card

Size	Document Number	Rev
A3	OAK14 Chief River DIS	A00

Date: Wednesday, September 05, 2012 Sheet 75 of 105

(Blanking)

M14 DIS

Wistron Corporation
21F, 88, Sec.1, Hsin Tai Wu Rd., Hsichih,
Taipei Hsien 221, Taiwan, R.O.C.

Title: Reserved

Size: A3 | Document Number: OAK14 Chief River DIS | Rev: A00

Date: Wednesday, September 05, 2012 | Sheet 76 of 105

(Blanking)

M14 DIS

Wistron Corporation
21F, 88, Sec.1, Hsin Tai Wu Rd., Hsichih,
Taipei Hsien 221, Taiwan, R.O.C.

Title: Reserved

Size: A3 | Document Number: OAK14 Chief River DIS | Rev: A00

Date: Wednesday, September 05, 2012 | Sheet 77 of 105

(Blanking)

M14 DIS

Wistron Corporation
21F, 88, Sec.1, Hsin Tai Wu Rd., Hsichih,
Taipei Hsien 221, Taiwan, R.O.C.

Title: Reserved

Size: A3 | Document Number: OAK14 Chief River DIS | Rev: A00

Date: Wednesday, September 05, 2012 | Sheet 78 of 105

(Blanking)

M14 DIS

Wistron Corporation
21F, 88, Sec.1, Hsin Tai Wu Rd., Hsichih,
Taipei Hsien 221, Taiwan, R.O.C.

Title: Free Fall Sensor

Size: A3 | Document Number: OAK14 Chief River DIS | Rev: A00

Date: Wednesday, September 05, 2012 | Sheet 79 of 105

(Blanking)

M14 DIS

Wistron Corporation
21F, 88, Sec.1, Hsin Tai Wu Rd., Hsichih,
Taipei Hsien 221, Taiwan, R.O.C.

Title: Reserved

Size: A3 | Document Number: OAK14 Chief River DIS | Rev: A00

Date: Wednesday, September 05, 2012 | Sheet 80 of 105

(Blanking)

M14 DIS

Wistron Corporation
21F, 88, Sec.1, Hsin Tai Wu Rd., Hsichih,
Taipei Hsien 221, Taiwan, R.O.C.

Title: Reserved

Size: A3 | Document Number: OAK14 Chief River DIS | Rev: A00

Date: Wednesday, September 05, 2012 | Sheet 81 of 105

SSID = User.Interface

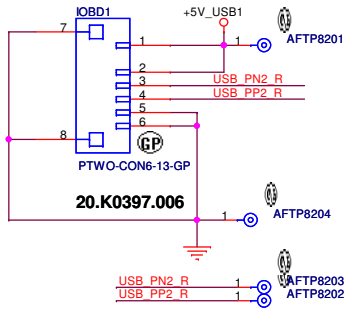

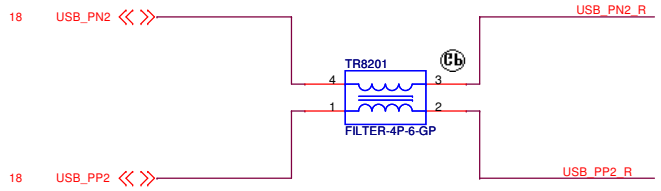

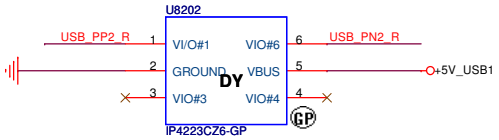

M14 DIS

Wistron Corporation
21F, 88, Sec.1, Hsin Tai Wu Rd., Hsichih,
Taipei Hsien 221, Taiwan, R.O.C.

Title: IO Board Connector

Size: A3 | Document Number: OAK14 Chief River DIS | Rev: A00

Date: Wednesday, September 05, 2012 | Sheet 82 of 105

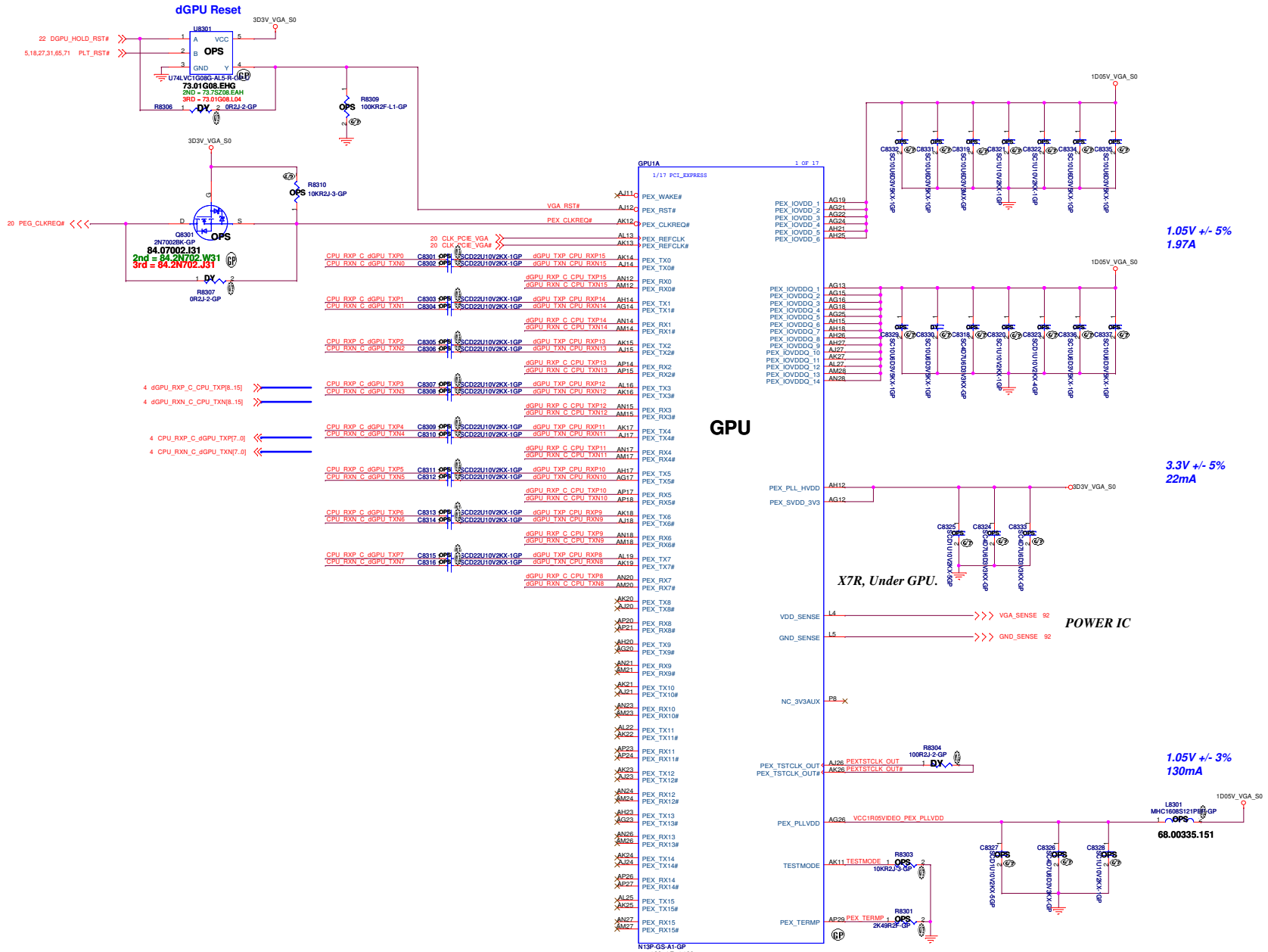

M14 DIS

Wistron Corporation
21F, 88, Sec.1, Hsin Tai Wu Rd., Hsichih,
Taipei Hsien 221, Taiwan, R.O.C.

Title: *GPU_PCIE/STRAPPING(1/5)*

Size: A2 | Document Number: OAK14 Chief River DIS | Rev: A00

Date: Wednesday, September 05, 2012 | Sheet 83 of 105

LVDS Interface

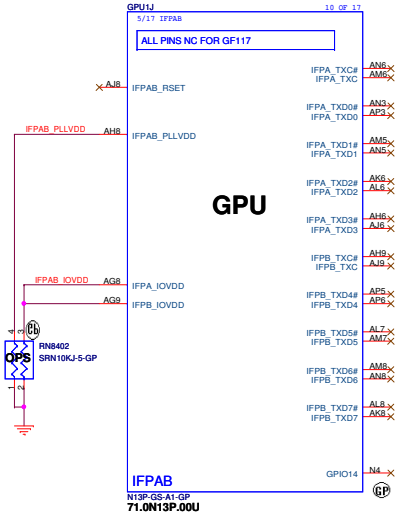

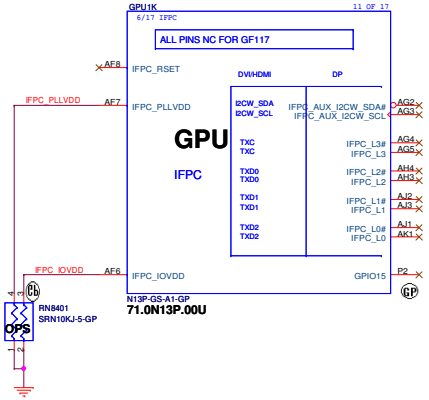

HDMI Interface

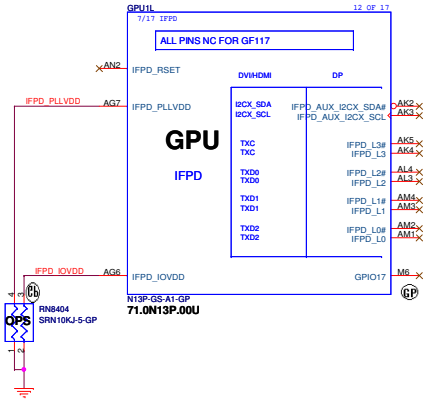

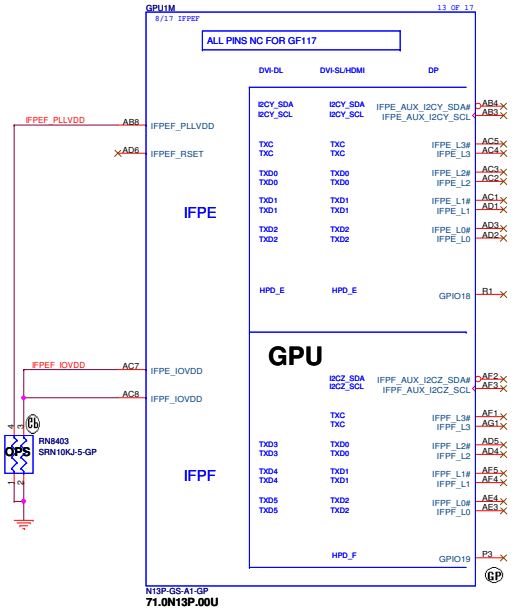

M14 DIS

Wistron Corporation
21F, 88, Sec.1, Hsin Tai Wu Rd., Hsichih,
Taipei Hsien 221, Taiwan, R.O.C.

Title: *GPU Memory(2/5)*

Size	Document Number	Rev
A2	OAK14 Chief River DIS	A00

Date: Wednesday, September 05, 2012 Sheet 84 of 105

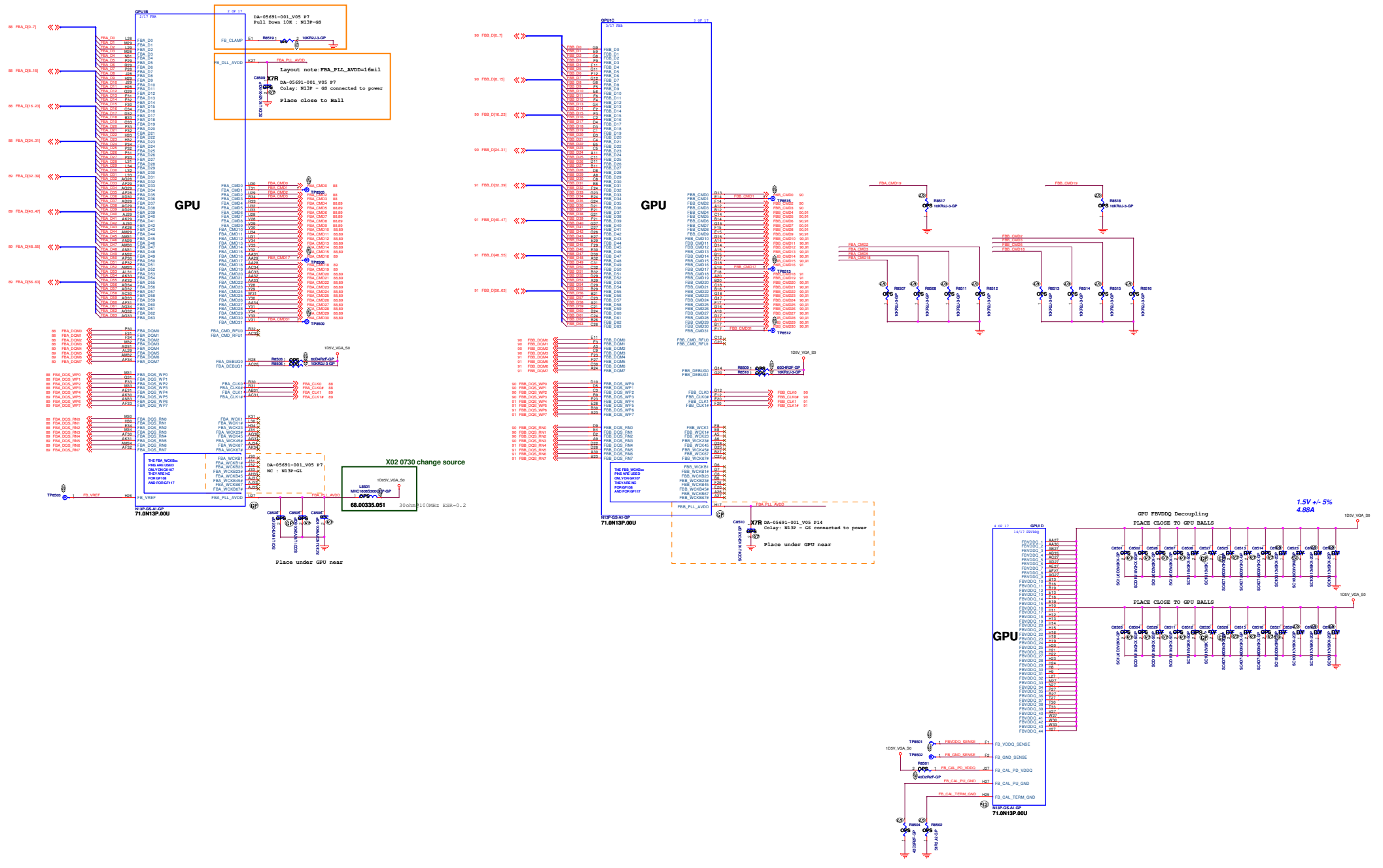
GPU
GPU
GPU
GPU
DA-05691-001_V05 P7
Pull Down 10K : N13P-GS
Layout note:FBA_PLL_AVDD=16mil
DA-05691-001_V05 P7
Colay: N13P - GS connected to power
Place close to Ball
DA-05691-001_V05 P7
NC : N13P-GL
X02 0730 change source
68.00335.051
30ohm/100MHz ESR=0.2
Place under GPU near
DA-05691-001_V05 P14
Colay: N13P - GS connected to power
Place under GPU near
71.0N13P.00U
GPU FBVDDQ Decoupling
PLACE CLOSE TO GPU BALLS
1.5V +/- 5%
4.88A
Wistron Corporation
GPU_DP/LVDS/CRT/GPIO(3/5)
OAK14 Chief River DIS
A00

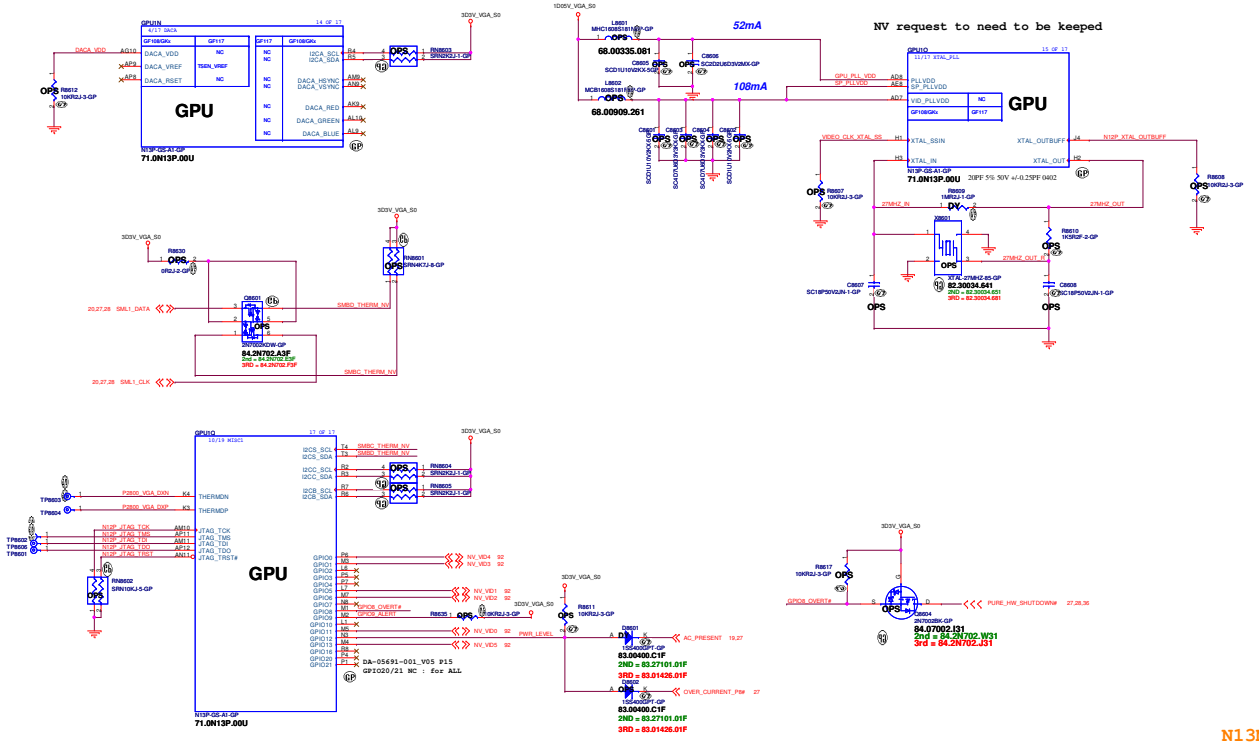

N13P-GS1

N13P-GS

Strap Pin Nmae	Logical strapping name bit#3	Logical strapping name bit#2	Logical strapping name bit#1	Logical strapping name bit#0	
ROM_SCLK	PCI_DEVID[4]	SUB_VENDOR	PCI_DEVID[5]	PEX_PLL_EN_TER_M	
		0		0	
ROM_SI	RAMCFG[3]	RAMCFG[2]	RAMCFG[2]	RAMCFG[0]	
ROM_SO	FB[1]	FB[0]	SMB_ALT_ADDR	VGA_DEVICE	
	1	0	0	1	10K ohm pull-up
STRAP0	USER[3]	USER[2]	USER[1]	USER[0]	
	1	1	1	1	45K ohm pull-up
STRAP1	3GIO_PADCFG[3]	3GIO_PADCFG[2]	3GIO_PADCFG[1]	3GIO_PADCFG[0]	
	0	0	0	0	5K ohm pull-down
STRAP2	PCI_DEVID[3]	PCI_DEVID[2]	PCI_DEVID[1]	PCI_DEVID[0]	
STRAP3	SOR3_EXPOSED	SOR2_EXPOSED	SOR1_EXPOSED	SOR0_EXPOSED	
	0	0	0	0	5K ohm pull-down
STRAP4	RESERVED	PCI_SPEED_CHANGE_GEN3	PCIE_MAX_SPEED	DP_PLL_VDD33V	
	0	1	1	1	45K ohm pull-down

Part Reference	Part Number	Value	PCB Footprint
R9621(DIS_ROM SI)	64.20025.6DL	20KR2F-L-GP	R402H16
R8621	64.15025.6DL	15KR2F-GP	R402H16
R8621	64.34825.6DL	34K8R2F-1-GP	R402H16
R8621	64.45325.6DL	45K3R2F-L-GP	R402H16
R8621	64.30125.6DL	30K1R2F-L-GP	R402H16
R8621	64.24925.6DL	24K9R2F-L-GP	R402H16

GPU	N13P-GS
STRAP 0	PULL UP 45.3K
STRAP 1	PULL DOWN 4.99K
STRAP 2	PULL DOWN 15K
STRAP 3	PULL DOWN 4.99K
STRAP 4	PULL DOWN 45.3K
ROM_SO	PULL UP 10K
ROM_SCLK	PULL UP 4.99K
VRAM	ROM_SI pin
128M*16 DDR3 Samsung K4W2G1646E-BC11	Pull down 24.9K ohm
128M*16 DDR3 Hynix H5TQ2G63DFR-11C	Pull down 30K ohm

N13M-GSR

Table 4. Binary Strap Mode Mapping

Strap Pin Name	Strap Mapping	Resistance	Polarity
ROM_SCLK	SMB_ALT_ADDR	10k Ω	Pull-down to GND
ROM_SI	SUB_VENDOR	10k Ω	Pull-up to 3V3 if VBIOS ROM exists Pull-down to GND if no VBIOS ROM
ROM_SO	VGA_DEVICE	10k Ω	Pull-down to GND (no display)
STRAP0	RAM_CFG[0]	10k Ω	See Note
STRAP1	RAM_CFG[1]	10k Ω	See Note
STRAP2	RAM_CFG[2]	10k Ω	See Note
STRAP3	RAM_CFG[3]	10k Ω	See Note
STRAP4	PCIE_MAX_SPEED	10k Ω	Pull-down to GND

GPU	N13M-GS					
STRAP 4	PULL DOWN 10K					
ROM_SCLK	PULL DOWN 10K					
ROM_SO	PULL DOWN 10K					
ROM_SI	PULL DOWN 10K					
VRAM	STRAP 0	STRAP 1	STRAP 2	STRAP 3		
128M*16 DDR3 Samsung	PULL UP 10K	PULL UP 10K	PULL DOWN 10K	PULL UP 10K	0xB	
128M*16 DDR3 Hynix	PULL DOWN 10K	PULL DOWN 10K	PULL UP 10K	PULL UP 10K	0xC	
256M*16 DDR3 Samsung	PULL UP 10K	PULL DOWN 10K	PULL DOWN 10K	PULL DOWN 10K	0x1	
256M*16 DDR3 Micron	PULL UP 10K	PULL DOWN 10K	PULL UP 10K	PULL DOWN 10K	0x5	

4/9 update GPU strappin

04.06 16:01:7

M14 DIS
Wistron Corporation
21F, 88, Sec.1, Hsin Tai Wu Rd., Hsichih, Taipei Hsien 221, Taiwan, R.O.C.
Title: GPU_POWER(4/5)
Size: A3 | Document Number: OAK14 Chief River DIS | Rev: A00
Date: Wednesday, September 05, 2012 | Sheet 86 of 105

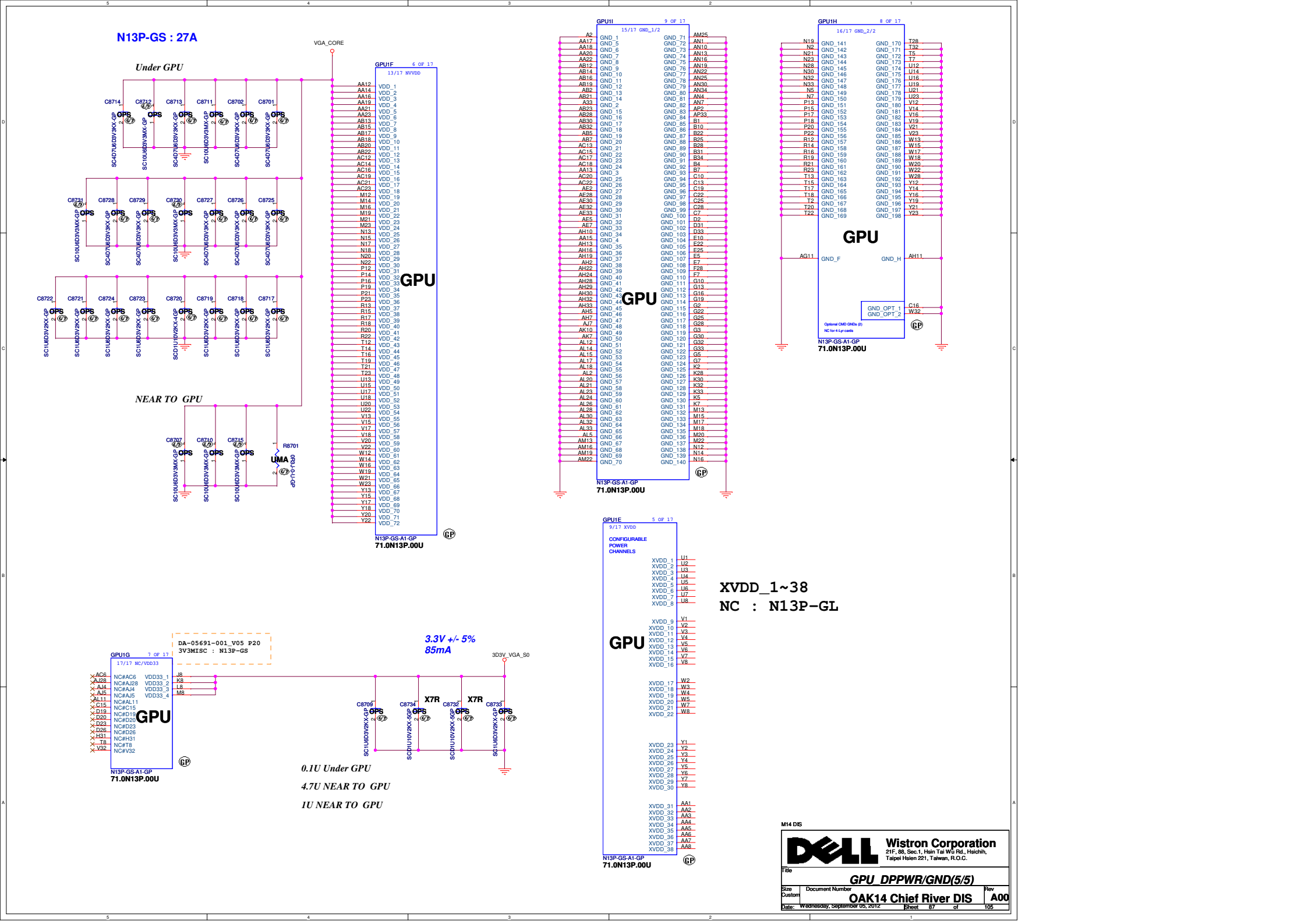
N13P-GS : 27A
Under GPU
VGA_CORE
GPU1F 6 OF 17
13/17 NVVDD
GPU
N13P-GS-A1-GP
71.0N13P.00U
NEAR TO GPU
UMA
R8701
GPU1I 9 OF 17
15/17 GND_1/2
GPU1H 8 OF 17
16/17 GND_2/2
GND_OPT_1
GND_OPT_2
Optional CMD GNDs (2)
NC for 4-Lyr cards
GPU1G 7 OF 17
17/17 NC/VDD33
DA-05691-001_V05 P20
3V3MISC : N13P-GS
3.3V +/- 5%
85mA
3D3V_VGA_S0
X7R
0.1U Under GPU
4.7U NEAR TO GPU
1U NEAR TO GPU
GPU1E 5 OF 17
9/17 XVDD
CONFIGURABLE
POWER
CHANNELS
XVDD_1~38
NC : N13P-GL
M14 DIS
Wistron Corporation
21F, 88, Sec.1, Hsin Tai Wu Rd., Hsichih,
Taipei Hsien 221, Taiwan, R.O.C.
Title
GPU_DPPWR/GND(5/5)
Size Custom
Document Number
OAK14 Chief River DIS
Rev A00
Date: Wednesday, September 05, 2012
Sheet 87 of 105

Frame Buffer Patition A-Lower Half

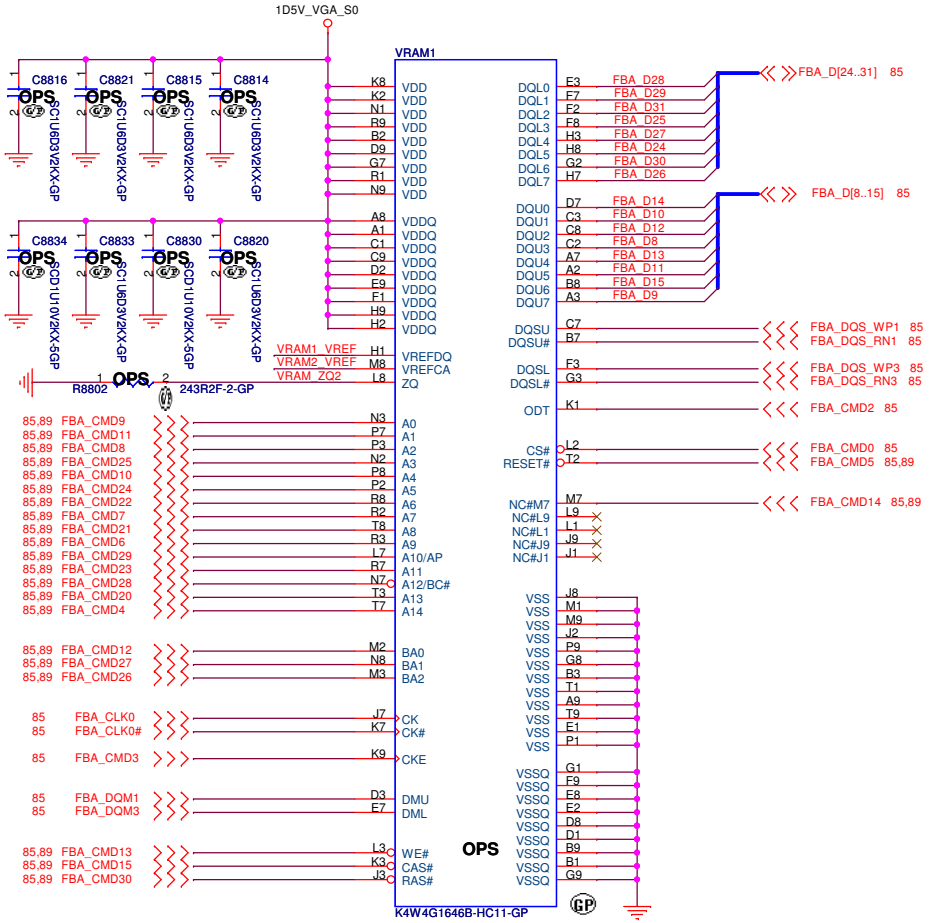

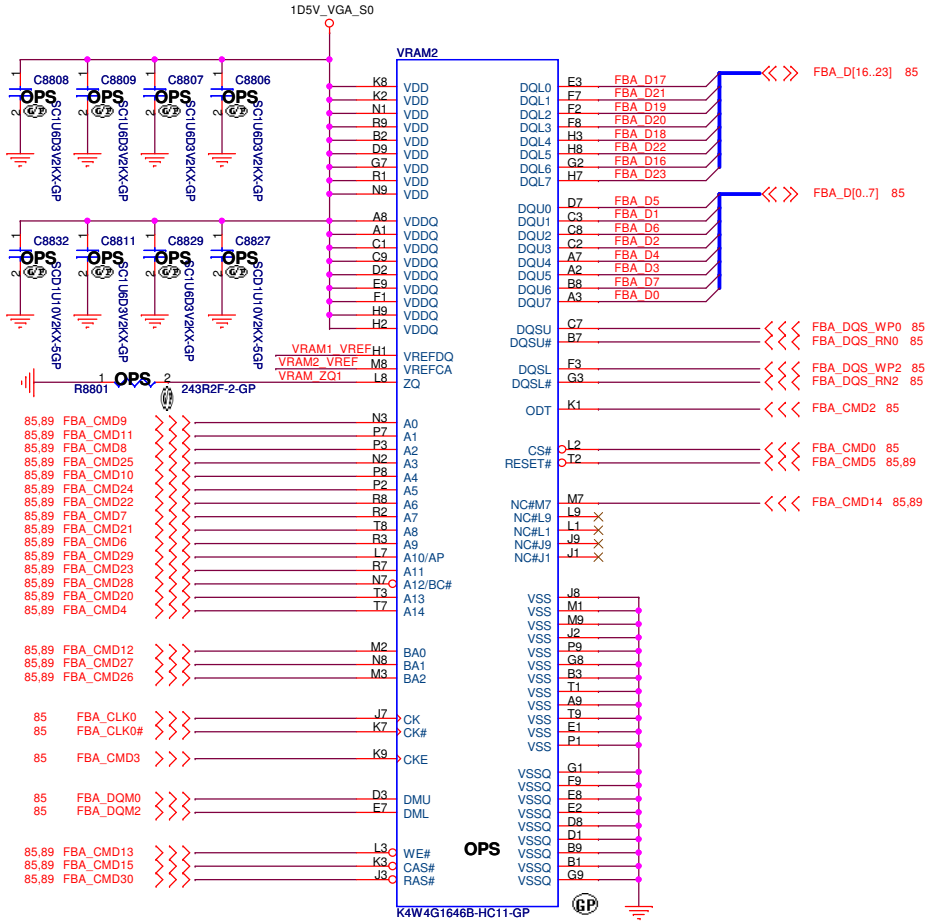

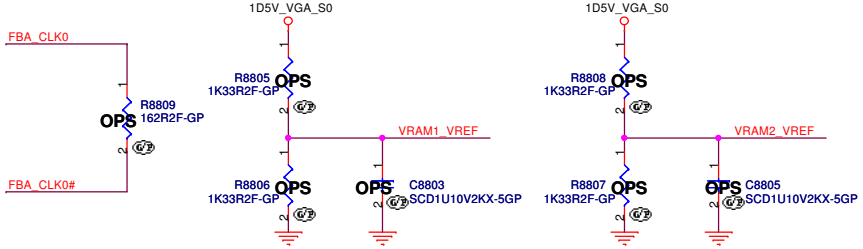

M14 DIS

Wistron Corporation
21F, 88, Sec.1, Hsin Tai Wu Rd., Hsichih,
Taipei Hsien 221, Taiwan, R.O.C.

Title: ***GPU-VRAM1,2 (1/4)***

Size	Document Number	Rev
A3	OAK14 Chief River DIS	A00

Date: Wednesday, September 05, 2012 Sheet 88 of 105

Frame Buffer Patition A-Upper Half

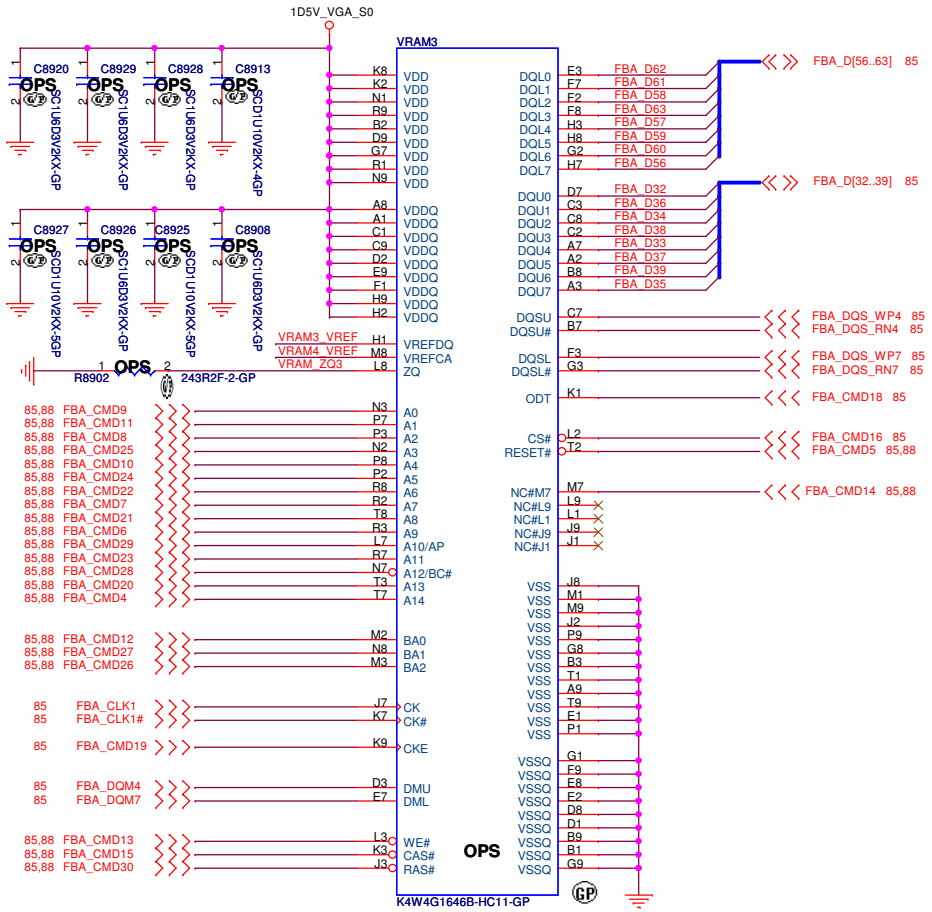

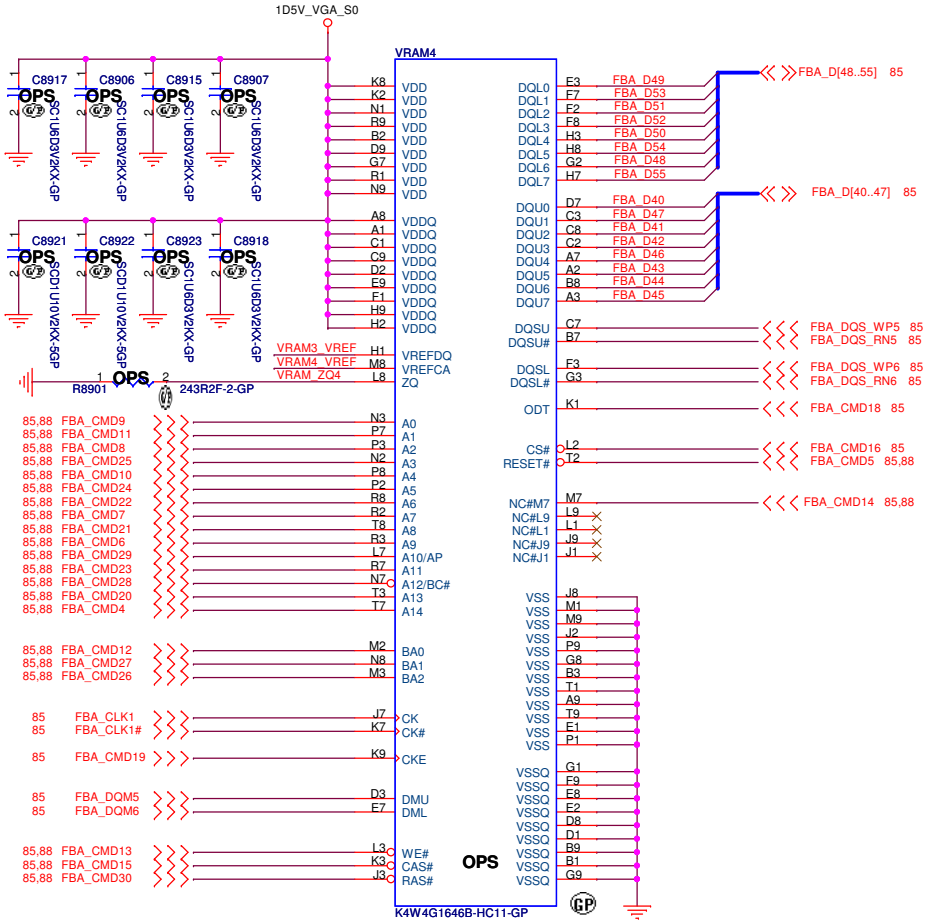

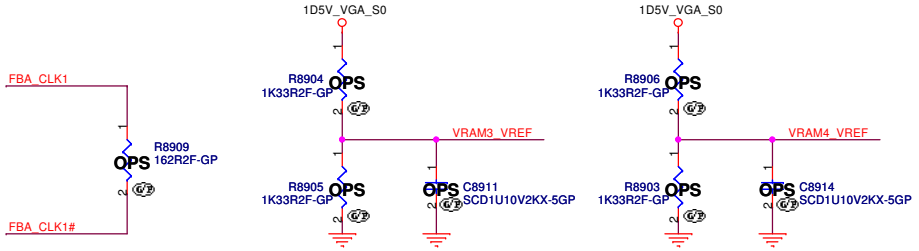

M14 DIS

Wistron Corporation
21F, 88, Sec.1, Hsin Tai Wu Rd., Hsichih,
Taipei Hsien 221, Taiwan, R.O.C.

Title: ***GPU-VRAM3,4 (2/4)***

Size: A3 | Document Number: **OAK14 Chief River DIS** | Rev: **A00**

Date: Wednesday, September 05, 2012 | Sheet 89 of 105

Frame Buffer Patition B-Lower Half

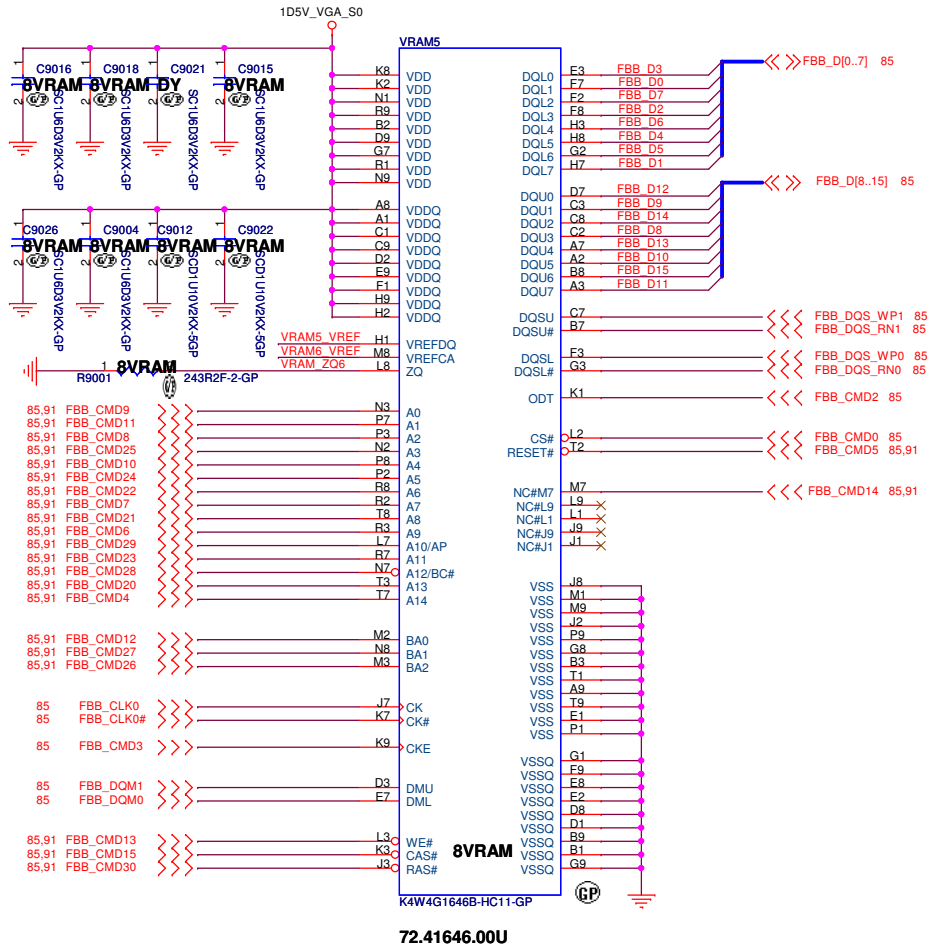

72.41646.00U

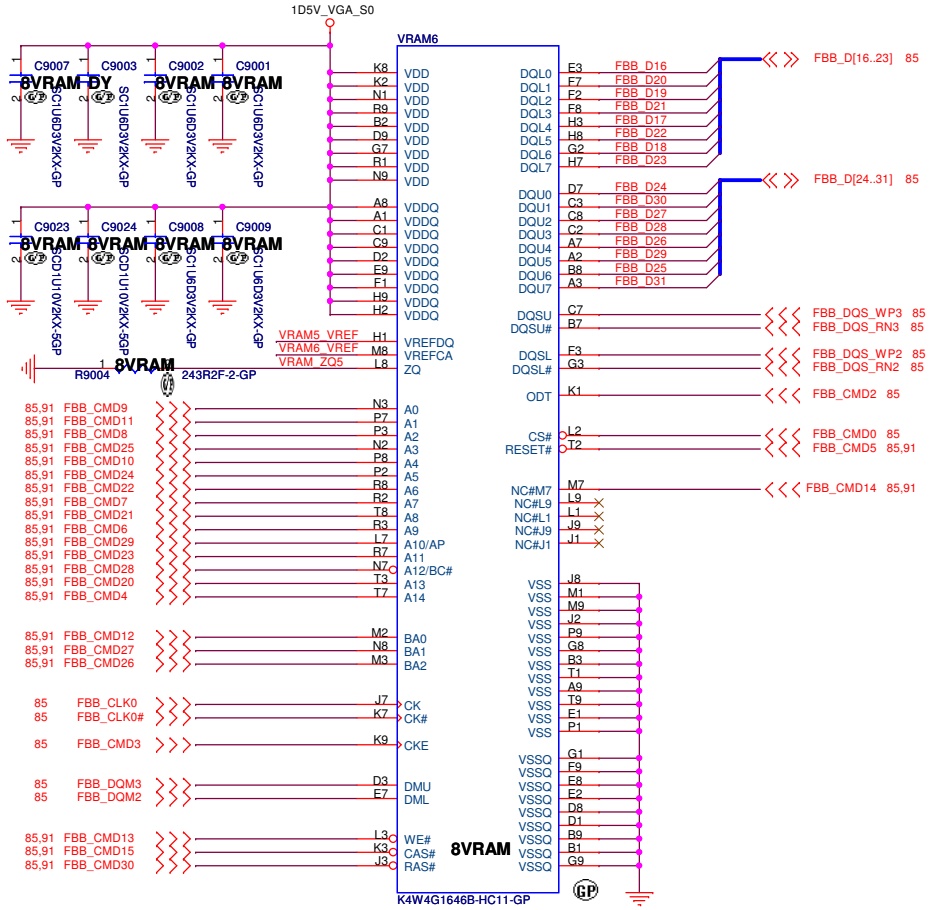

72.41646.00U

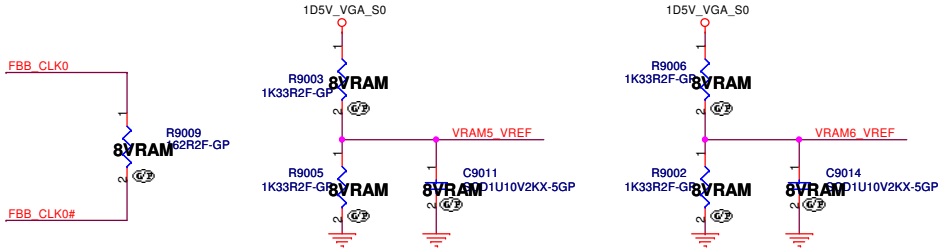

M14 DIS

Wistron Corporation
21F, 88, Sec.1, Hsin Tai Wu Rd., Hsichih,
Taipei Hsien 221, Taiwan, R.O.C.

Title: GPU-VRAM5,6 (3/4)

Size: A3 | Document Number: OAK14 Chief River DIS | Rev: A00

Date: Wednesday, September 05, 2012 | Sheet 90 of 105

Frame Buffer Patition B-Upper Half

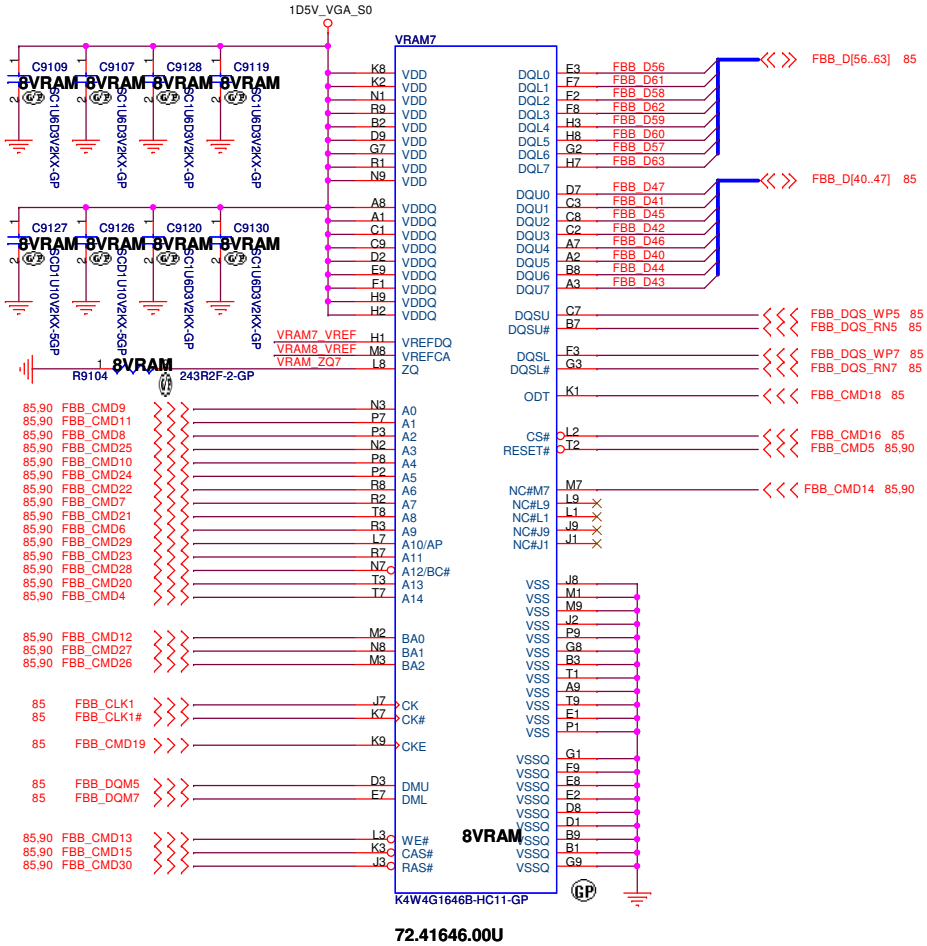

72.41646.00U

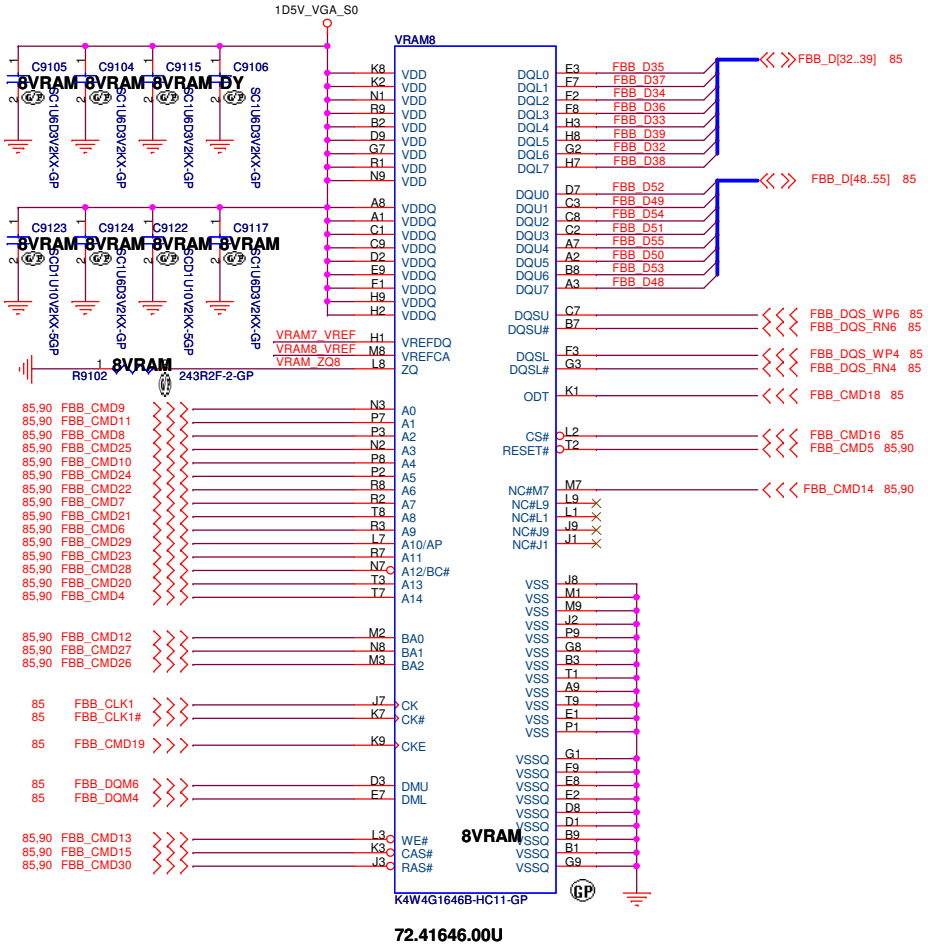

72.41646.00U

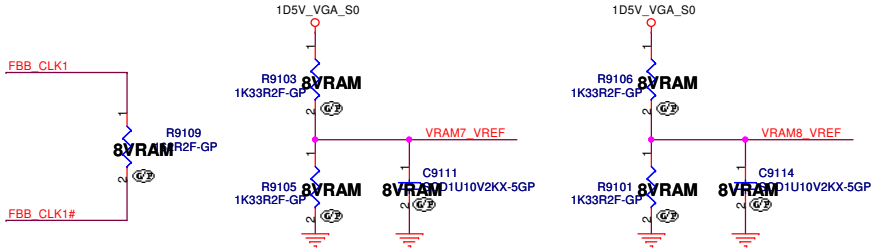

M14 DIS

Wistron Corporation
21F, 88, Sec.1, Hsin Tai Wu Rd., Hsichih,
Taipei Hsien 221, Taiwan, R.O.C.

Title: *GPU-VRAM7,8 (4/4)*

Size	Document Number	Rev
A3	OAK14 Chief River DIS	A00

Date: Wednesday, September 05, 2012 Sheet 91 of 105

V-BOOT	VID0	VID1	VID2	VID3	VID4	VID5	VID6
0.9000V	0	0	0	0	1	1	0

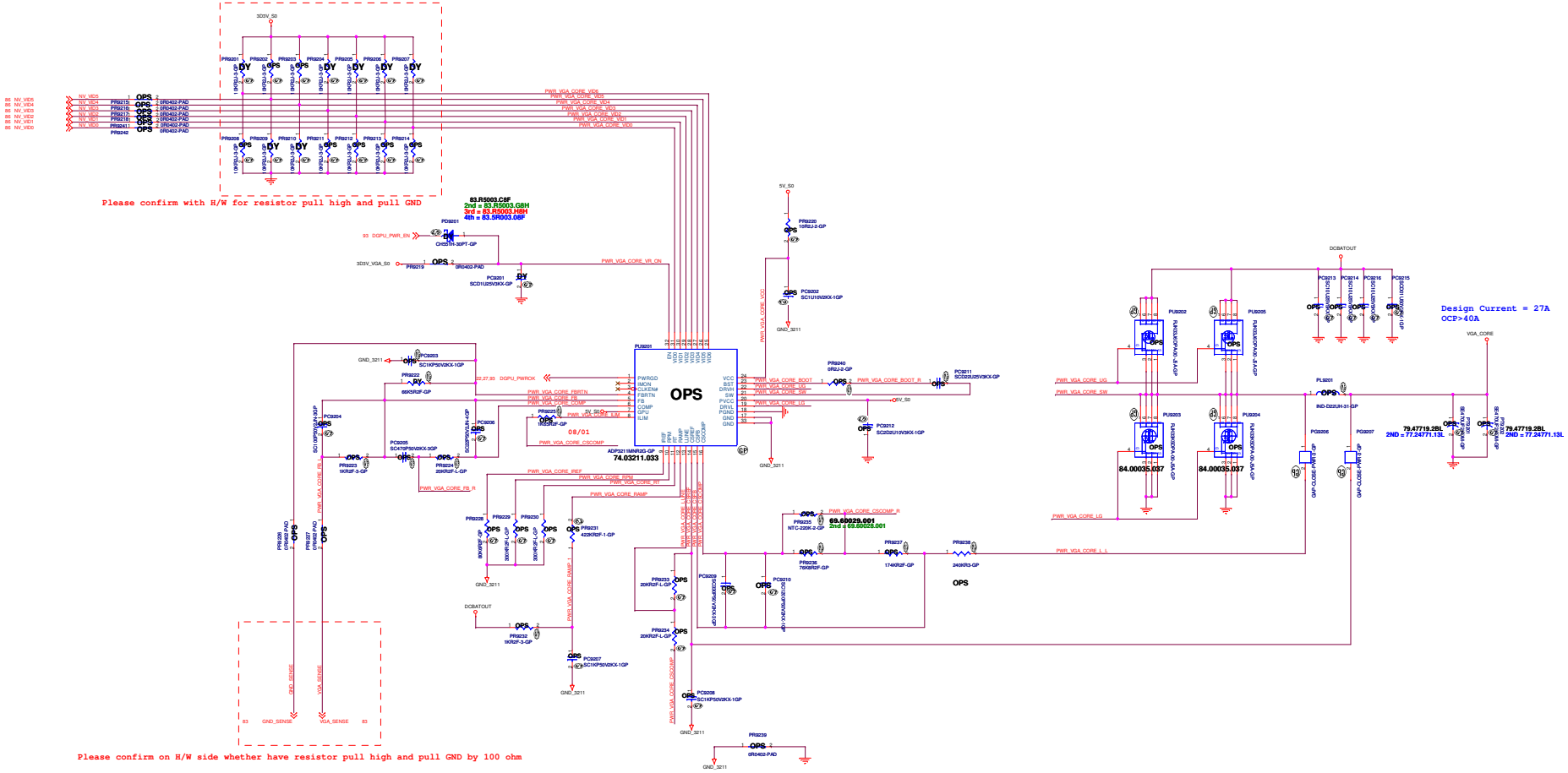

I/P cap: 10U 25V K0805 X5R/ 78.10622.51L
Inductor: CHIP CHK 0.360H PCMC104T-R36MH 1.05mohm/ Isat =60A rms68.R3610.20S
O/P cap: CHIP CAP 470UF 2V EEFSX0D471X/ 3.5Arms Panasonic/79.47719.28L
H/S: RJK03J6DPA-00#J5A / 10mohm/13mOhm@4.5Vgs/ 84.00036.037
L/S: RJK03K5DPA-00#J5A / 3mohm/3.9mOhm@4.5Vgs/ 84.00035.037

M14 DIS

Wistron Corporation
21F, 88, Sec.1, Hsin Tai Wu Rd., Hsichih,
Taipei Hsien 221, Taiwan, R.O.C.

Title	ADP3211 +VGA_CORE	
Size	Document Number	Rev
Custom	DNE40 14 CR DIS	A00
Date: Wednesday, September 05, 2012	Sheet 52 of 105	

3D3V_VGA_S0

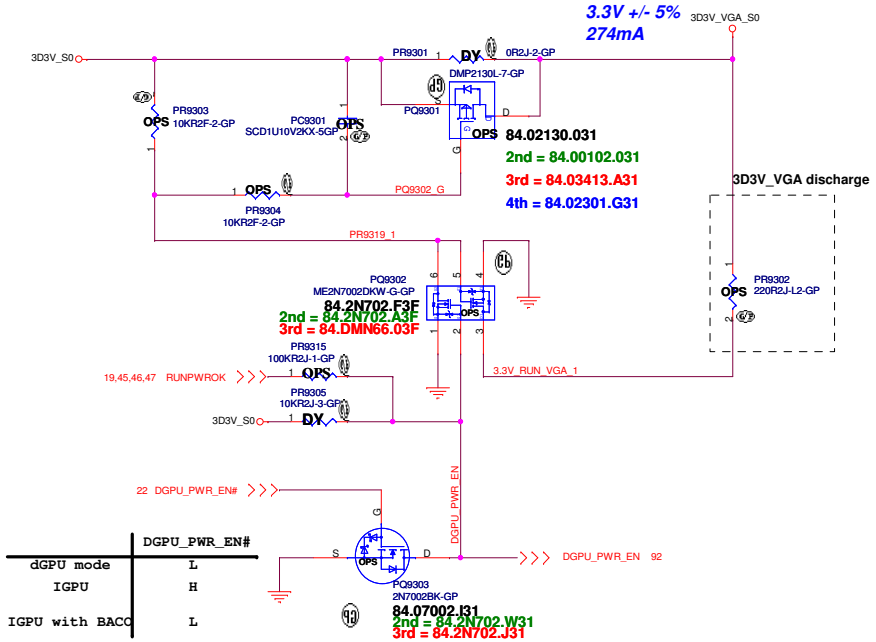

	DGPU_PWR_EN#
dGPU mode	L
IGPU	H
IGPU with BACO	L

1D05V_VGA_S0

3D3V_VGA_S0 should ramp-up before VGA_Core
VGA_Core should ramp-up before 1D5V_VGA_S0
1D5V_VGA_S0 should ramp-up before 1D05V_VGA_S0

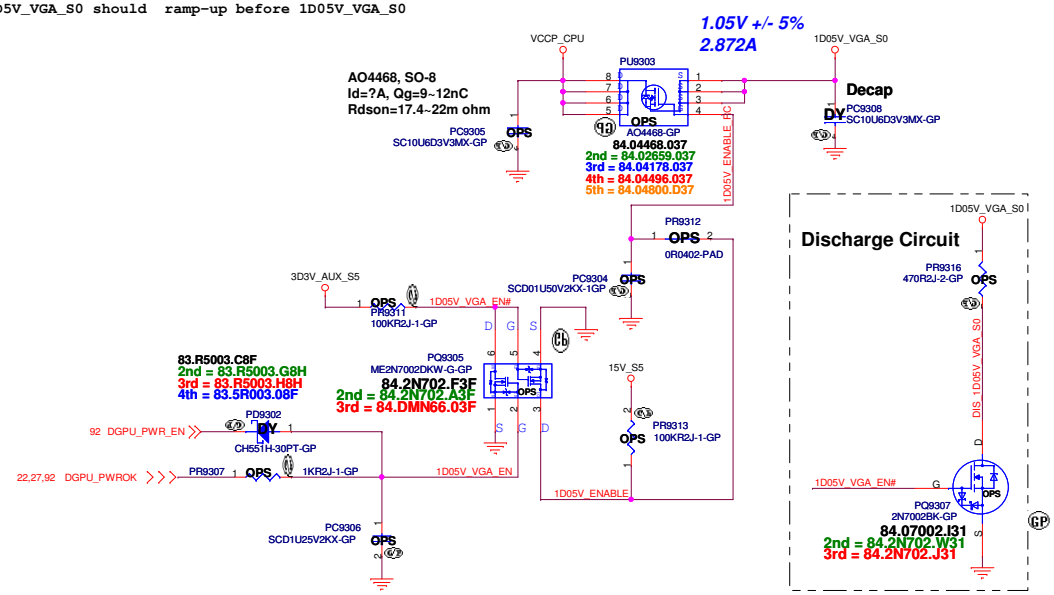

1D5V_VGA_S0

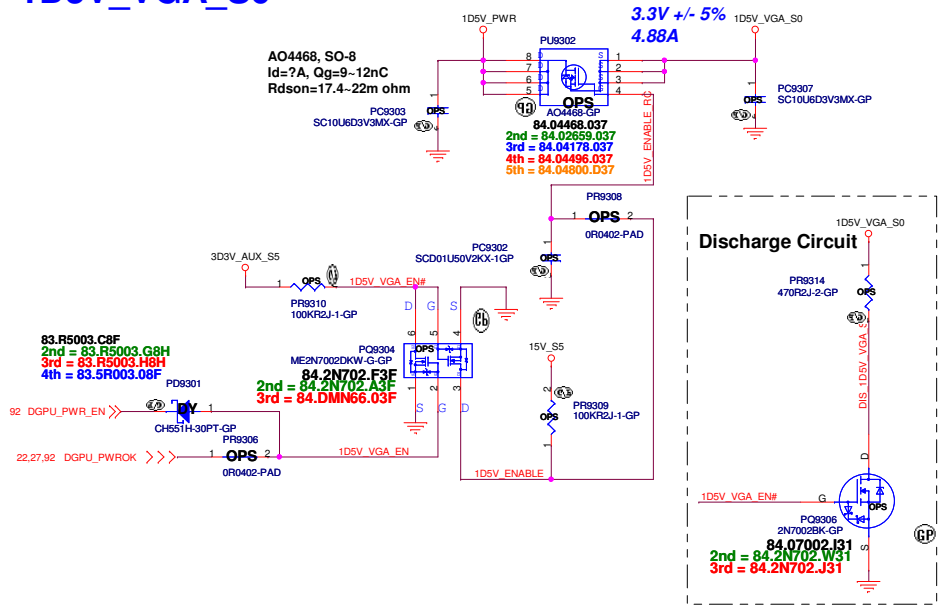

NV do not need 1.8V

M14 DIS

Wistron Corporation
21F, 88, Sec.1, Hsin Tai Wu Rd., Hsichih,
Taipei Hsien 221, Taiwan, R.O.C.

Title: **DISCRETE VGA POWER**

Size: Custom | Document Number: **OAK14 Chief River DIS** | Rev: **A00**

Date: Wednesday, September 05, 2012 | Sheet 93 of 105

(Blanking)

M14 DIS

Wistron Corporation
21F, 88, Sec.1, Hsin Tai Wu Rd., Hsichih,
Taipei Hsien 221, Taiwan, R.O.C.

Title: *LVDS_Switch*

Size	Document Number	Rev
A3	OAK14 Chief River DIS	A00

Date: Wednesday, September 05, 2012 Sheet 94 of 105

(Blanking)

M14 DIS

Wistron Corporation
21F, 88, Sec.1, Hsin Tai Wu Rd., Hsichih,
Taipei Hsien 221, Taiwan, R.O.C.

Title: *CRT_Switch*

Size	Document Number	Rev
A3	OAK14 Chief River DIS	A00

Date: Wednesday, September 05, 2012 Sheet 95 of 105

SSID = SDIO

(Blanking)

M14 DIS

Wistron Corporation
21F, 88, Sec.1, Hsin Tai Wu Rd., Hsichih,
Taipei Hsien 221, Taiwan, R.O.C.

Title: TOUCH PANEL

Size: A3 | Document Number: OAK14 Chief River DIS | Rev: A00

Date: Wednesday, September 05, 2012 | Sheet 96 of 105

SSID = Mechanical

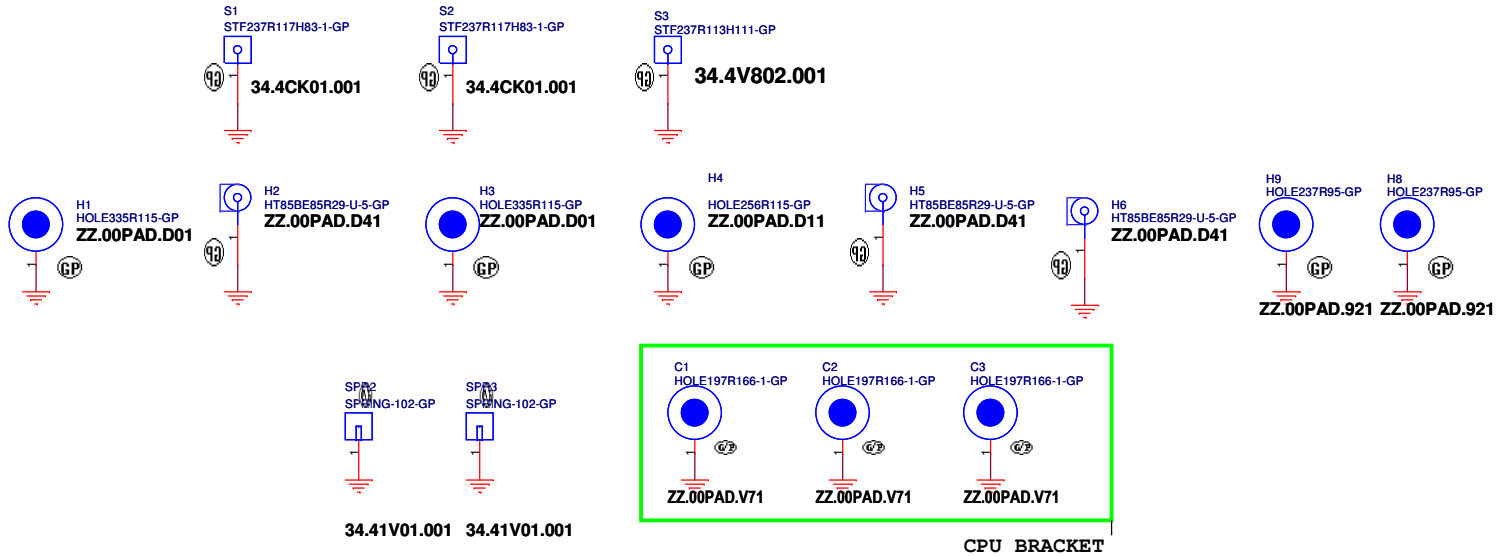

SSID = EMI

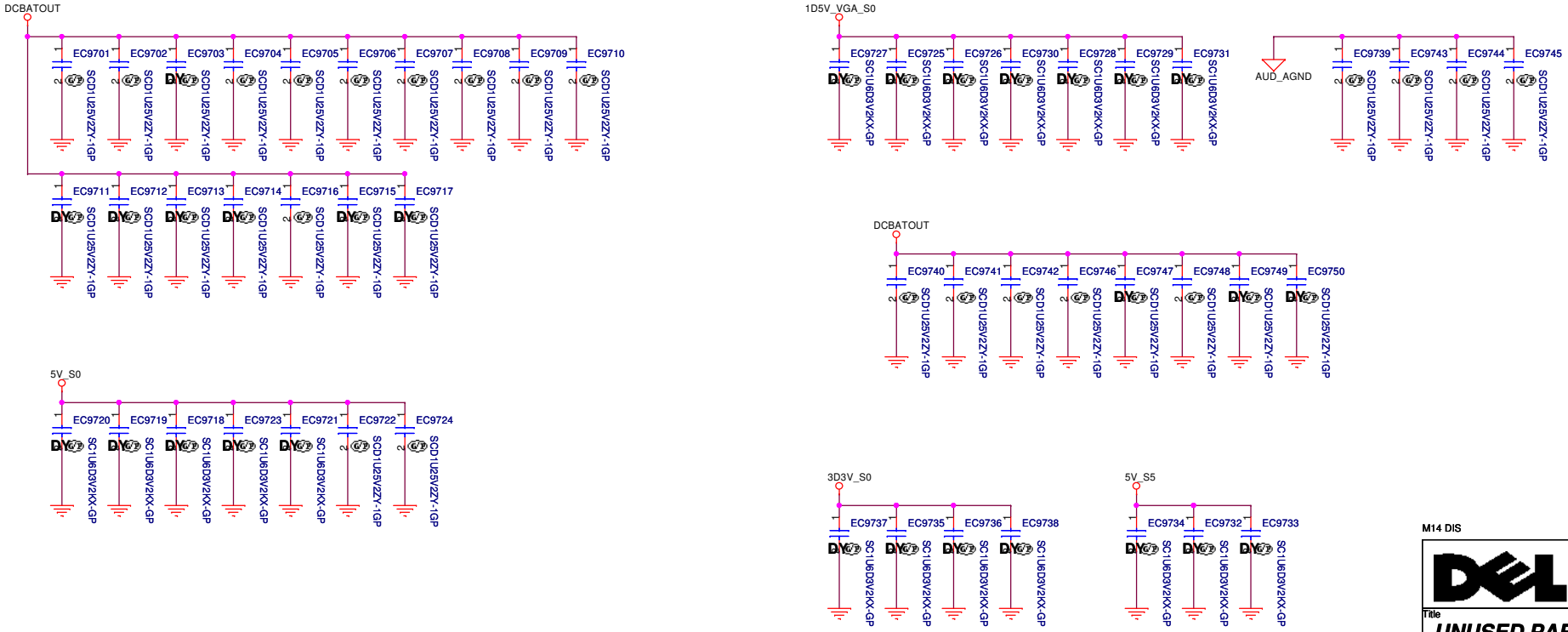

M14 DIS

Wistron Corporation
21F, 88, Sec.1, Hsin Tai Wu Rd., Hsichih,
Taipei Hsien 221, Taiwan, R.O.C.

Title: ***UNUSED PARTS/EMI Capacitors***

Size	Document Number	Rev
A3	OAK14 Chief River DIS	A00

Date: Wednesday, September 05, 2012 Sheet 97 of 105

Chief River Platform Power Sequence

(AC mode)

Red Words: Controlled by EC GPIO

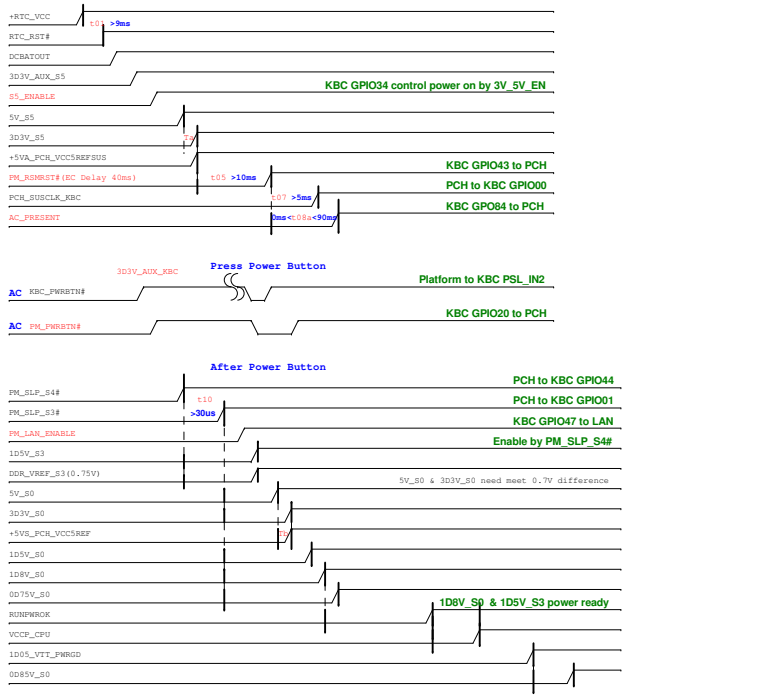

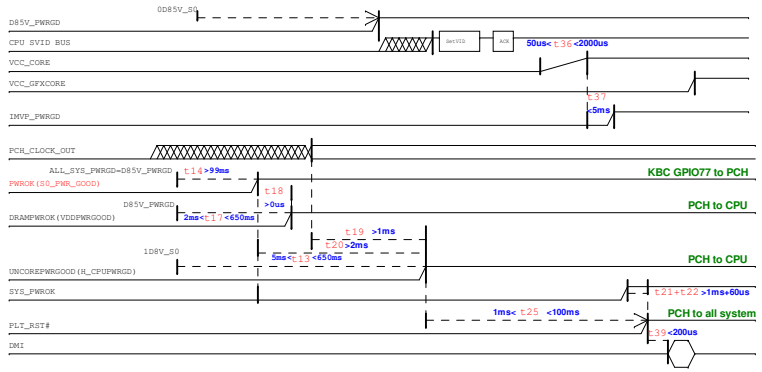

N13M-GS Power-Up/Down Sequence

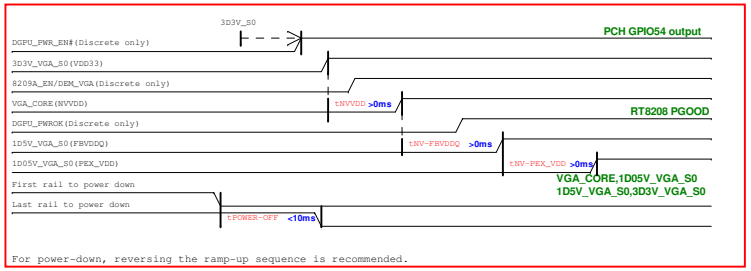

(DC mode)

Red Words: Controlled by EC GPIO

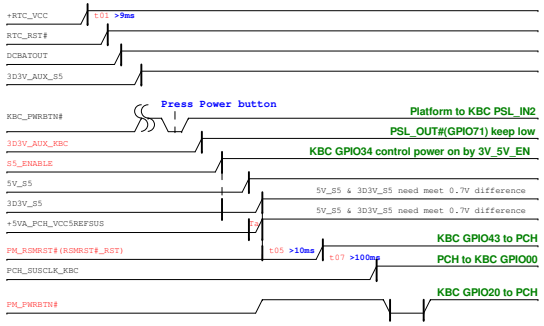

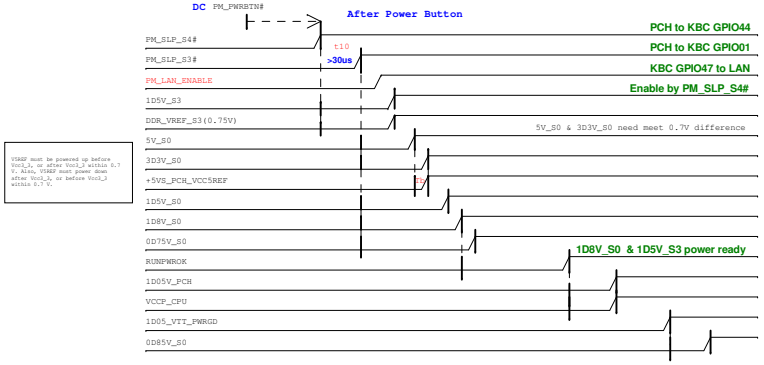

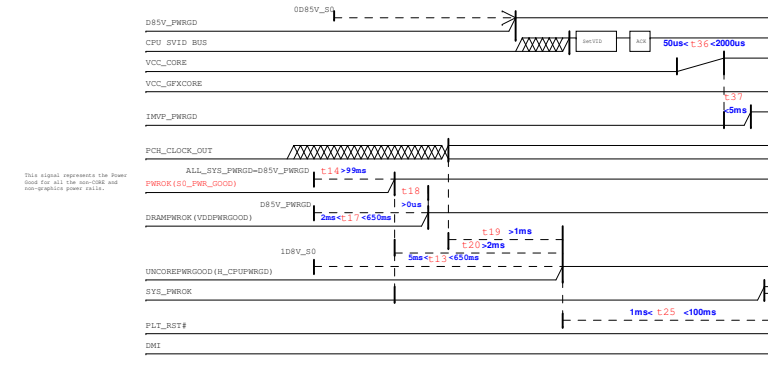

M14 DIS

Wistron Corporation
21F, 88, Sec.1, Hsin Tai Wu Rd., Hsichih, Taipei Hsien 221, Taiwan, R.O.C.

Title: Power Sequence		
Size: A1	Document Number: OAK14 Chief River DIS	Rev: A00
Date: Wednesday, September 05, 2012	Sheet 99 of 100	

OAK14 Chief River POWER UP SEQUENCE DIAGRAM

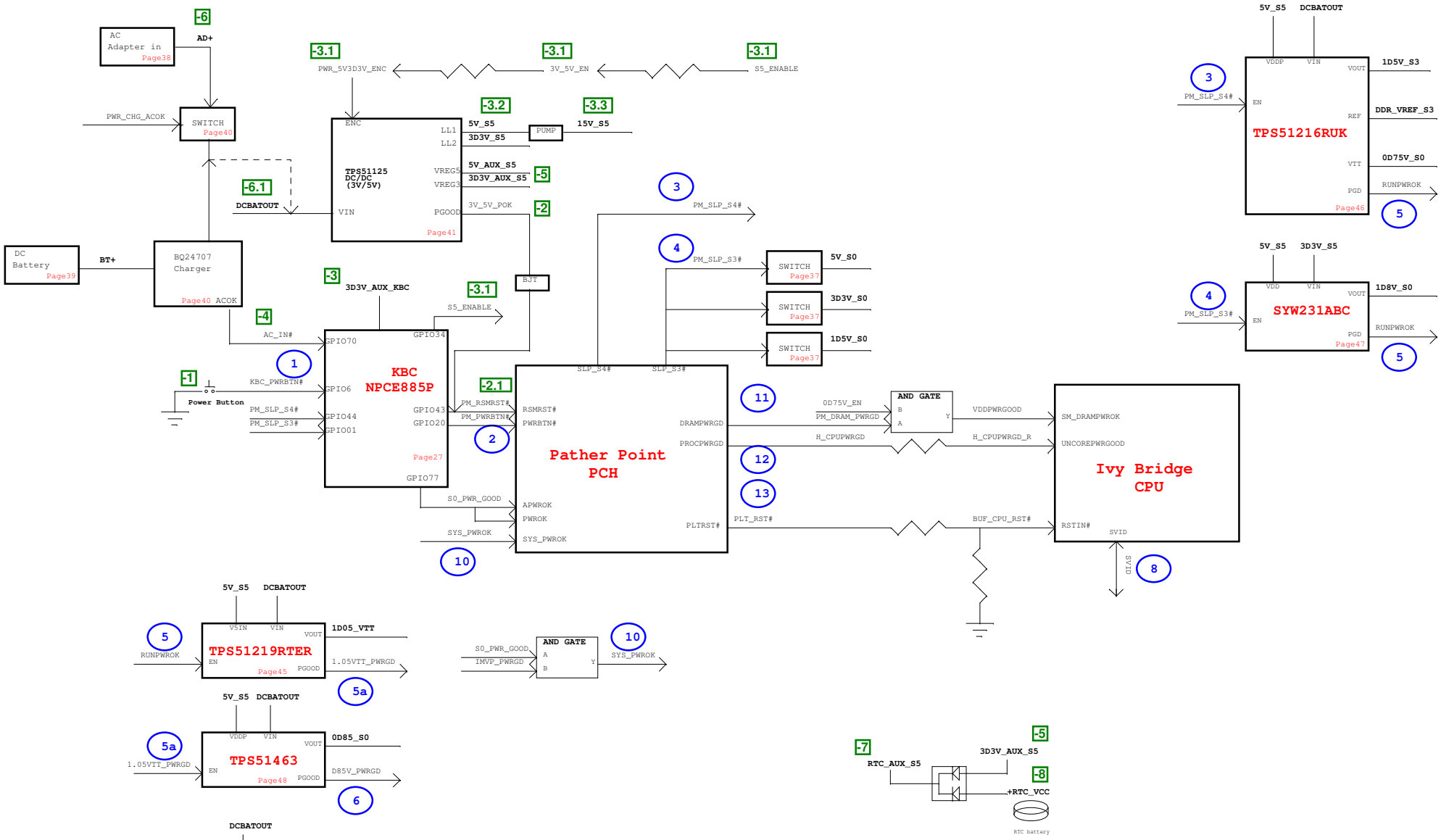

Power Up Sequence: -8 ~ 13

M14 DIS

Wistron Corporation
21F, 88, Sec.1, Hsin Tai Wu Rd., Hsichih, Taipei Hsien 221, Taiwan, R.O.C.

Title: Power Sequence Diagram

Size: A2 | Document Number: OAK14 Chief River DIS | Rev: A00

Date: Wednesday, September 05, 2012 | Sheet 89 of 105

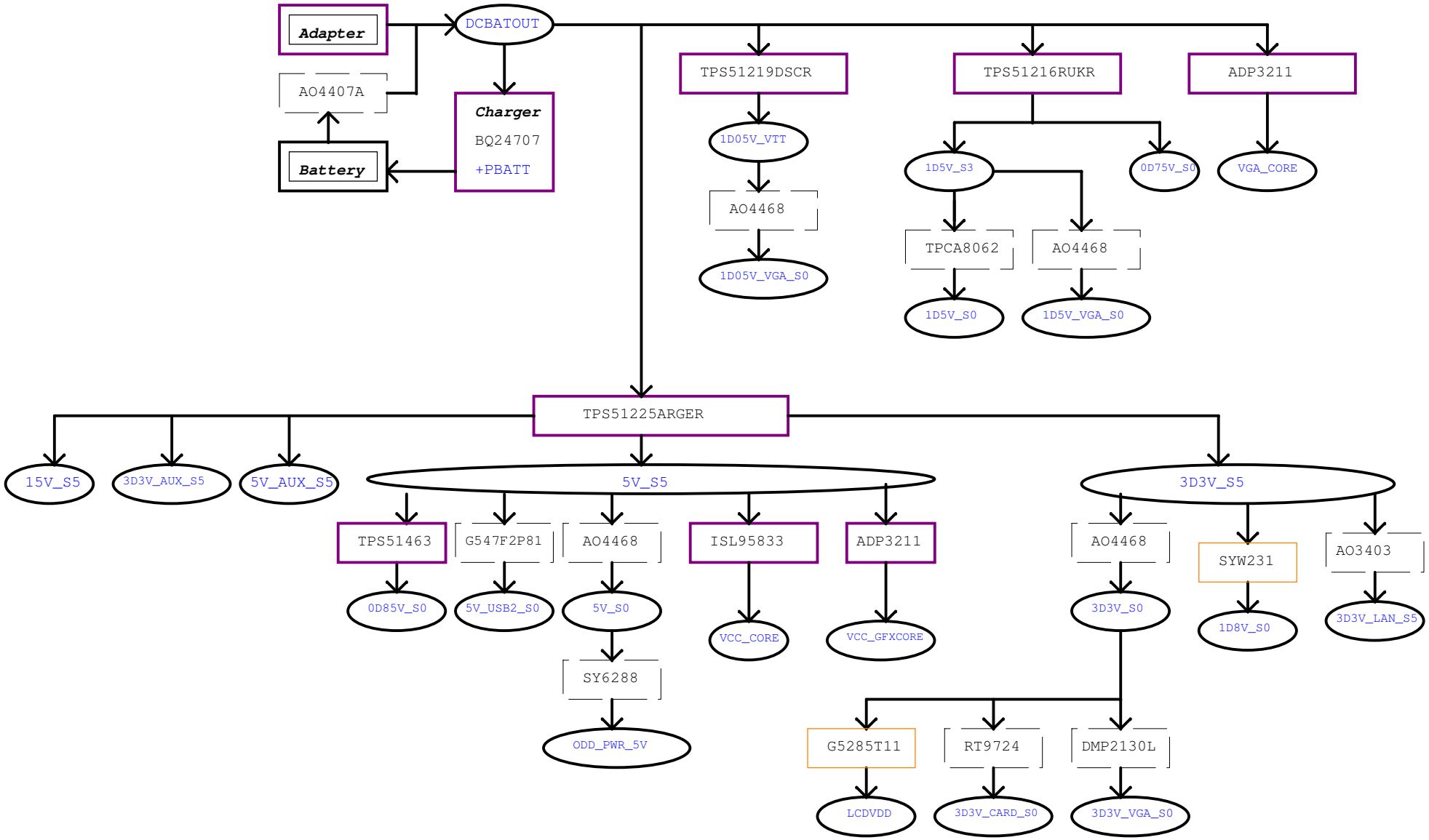

Power Shape

Regulator	LDO	Switch

M14 DIS

Wistron Corporation
21F, 88, Sec.1, Hsin Tai Wu Rd., Hsichih,
Taipei Hsien 221, Taiwan, R.O.C.

Title: **Power Block Diagram**

Size	Document Number	Rev
A3	OAK14 Chief River DIS	A00

Date: Wednesday, September 05, 2012 Sheet 100 of 105

PCH SMBus Block Diagram

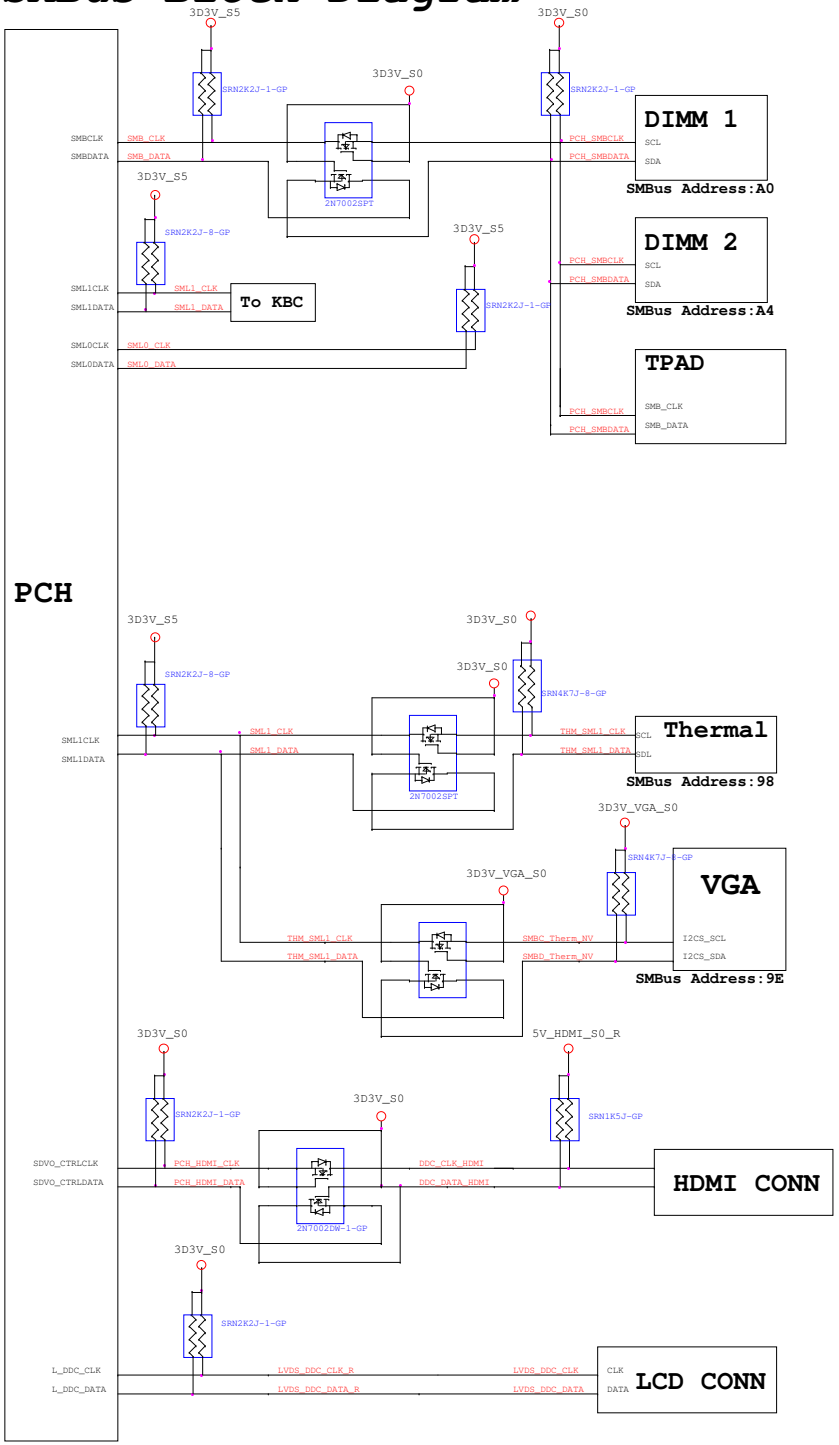

KBC SMBus Block Diagram

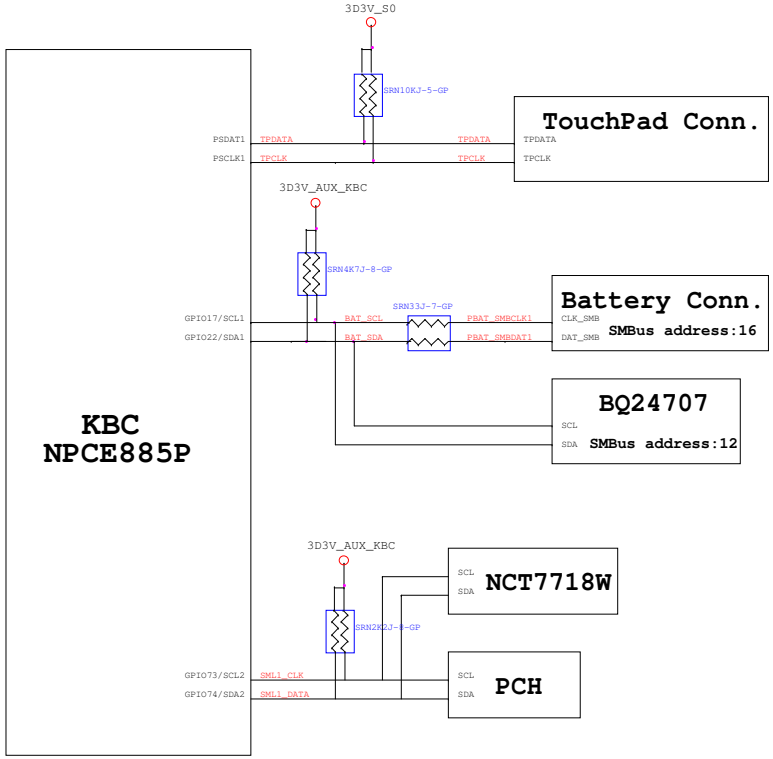

M14 DIS

Wistron Corporation
21F, 88, Sec.1, Hsin Tai Wu Rd., Hsichih,
Taipei Hsien 221, Taiwan, R.O.C.

Title: SMBUS Block Diagram

Size	Document Number	Rev
A2	OAK14 Chief River DIS	A00

Date: Wednesday, September 05, 2012 Sheet 101 of 105

OAK14 DIS CLK Block Diagram

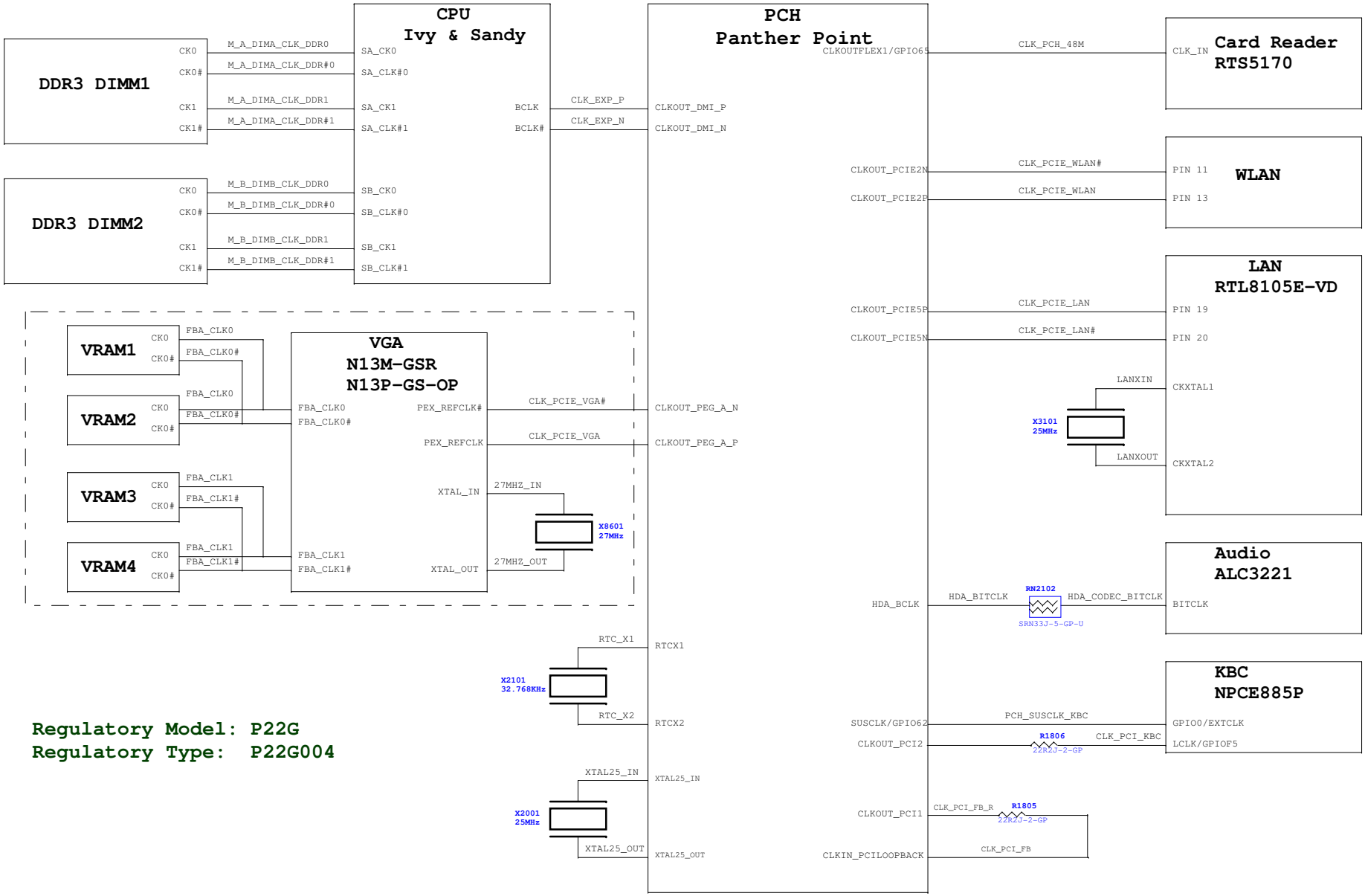

Regulatory Model: P22G
Regulatory Type: P22G004

M14 DIS

Wistron Corporation
21F, 88, Sec.1, Hsin Tai Wu Rd., Hsichih,
Taipei Hsien 221, Taiwan, R.O.C.

Title: CLK Block Diagram

Size: A2 | Document Number: OAK14 Chief River DIS | Rev: A00

Date: Wednesday, September 05, 2012 | Sheet 102 of 105

Thermal Block Diagram

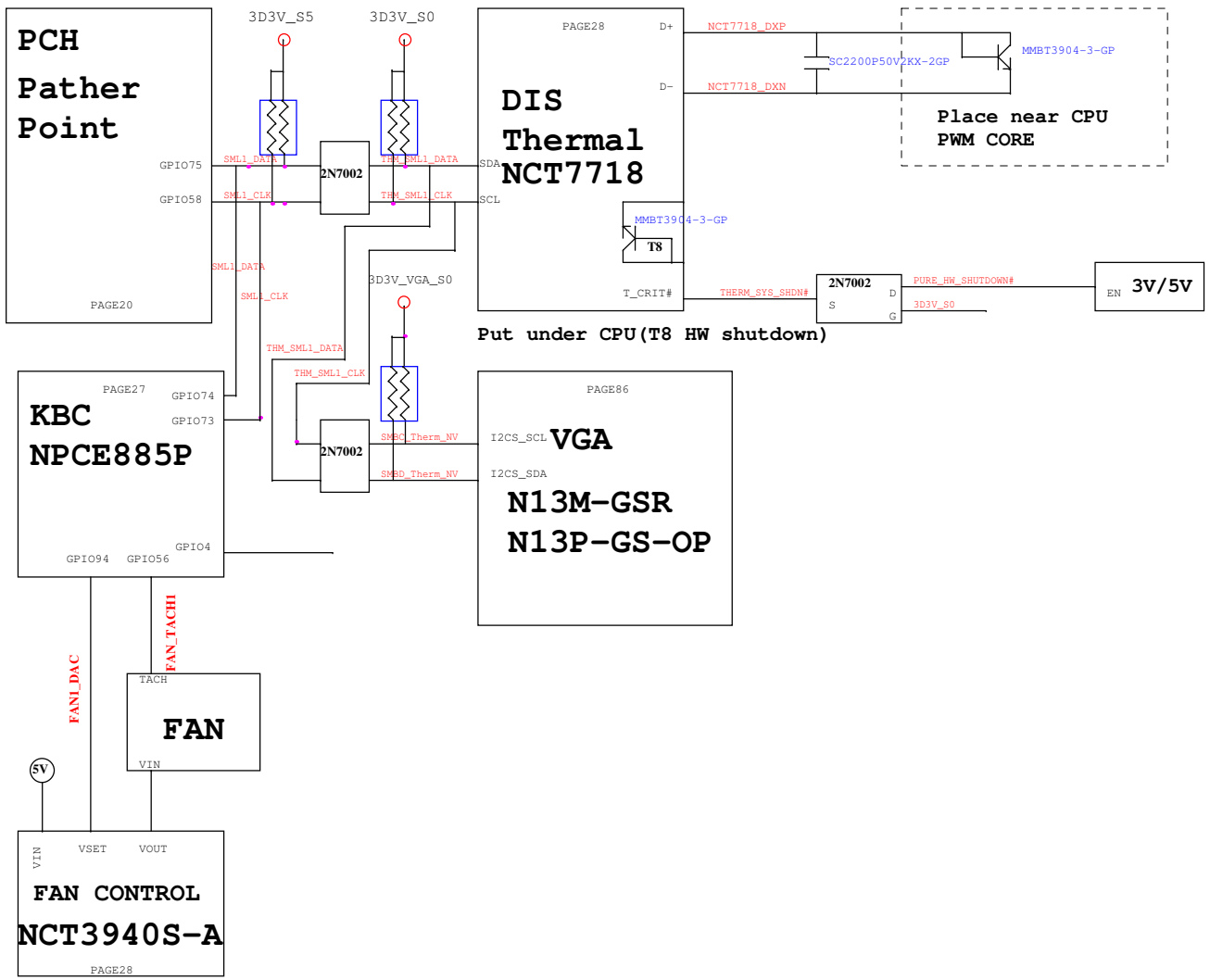

Audio Block Diagram

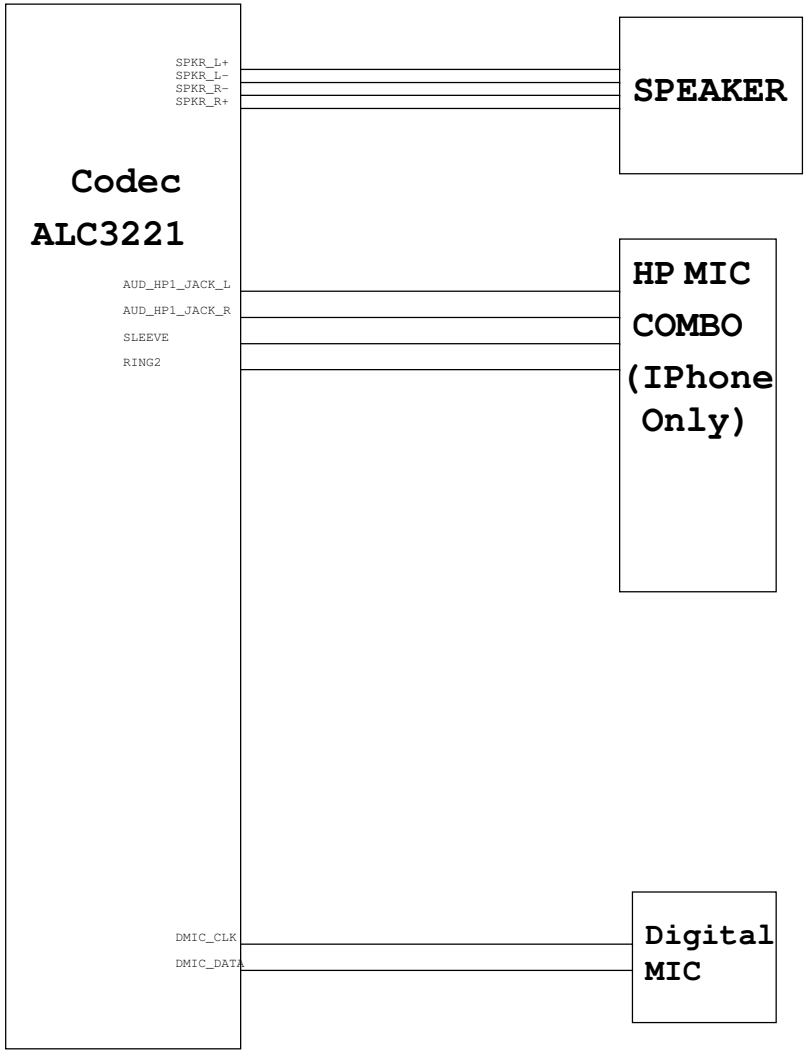

M14 DIS

Wistron Corporation
21F, 88, Sec.1, Hsin Tai Wu Rd., Hsichih,
Taipei Hsien 221, Taiwan, R.O.C.

Title	Thermal/Audio Block Diagram	
Size: Custom	Document Number: OAK14 Chief River DIS	Rev: A00
Date: Wednesday, September 05, 2012	Sheet 103 of 105	

Version	Date	PAGE	Description of Required Change
X01	5/10	P38	Dummy R3818 R3813 for DT Mode
X01	5/10	P20	Change CLK_PCIE_WLAN_REQ# PU from 3D3V_S5 to 3D3V_S0 & change port 3 to port 2(non AOAC)
X01	5/10	P86	Dummy R8613 (for N13M-GS1 strappin)
X01	5/28		Update connector list(5/28) for X01
X01	5/30	P49	Add TPNL1 (USB20 port#3)
X01	5/30	P29	Add delay circuit for Audio Jack JD pin
X01	5/30	P59	Change RJ45 Conn
X01	6/1	P38	Stuff PQ3801 PR3814 PR3815 for DT mode
X01	6/1	P37	Change R3713 to 10k for sequence timming
X01	6/1	P31	Change R3118 to 20k for sequence timming
X01	6/1	P69	Add KBL1 and keyboard backlight function
X01	6/1	P27	Change PCB version from X00 to X01
X01	6/5	P46	Fine tune the level of 1d5v_vga_s0: PR4601 (47K -> 57.6K)
X01	6/5	P58	Add TVS at combo JACK & RJ45 for EMI request
X01	6/5	P18	Move the KB_LED_BL_DET from GPIO5 to GPIO4
X01	6/11		Implement EMI change request 6/11
X01	6/11	P27	Delete RN2702 , DY R2716, Stuff R2717 For DT Mode
X01	6/11	P21	Add VRAM detect circuit at PCH_GPIO57
X01	6/11	P51	Change D5101 to 83.00056.G11 for lower internal cap
X01	6/12	P18	Move USB2.0 from port4# to port2#
X01	6/12	P49	Modify CAMERA1 to CAM1
X01	6/13	P61	Separate the USB3.0 PWR to USB30_VCCA & USB30_VCCB
X01	6/14	P49	Add LCD Back Light control circuit from KBC GPIO33
X01	6/14	P40	implement Power team request item
X01	6/15	P31	Change C3102=C3103=18pf for Xtal vendor request
X01	6/15	P62	Modify cap value for USB30_VCCA & USB30_VCCB
X01	6/18	P69	DY the Keyboard back light parts, add R6916 for PU
X01	6/18	P61	Change TC6102 & TC6104 to 78.10710.52L; TC6103 to 79.10710.60L
X01	6/18	P20	Move WLAN from PCIE 4# to PCIE 3#
X01	6/18	P51	implement EMI team request item (6/15)
X01	6/18	P69	Remove R6916 Stuff R6912
X01	6/18	P69	Change Q6801~Q6805 & Q6902 to 84.00144.P11

M14 DIS

Wistron Corporation
21F, 88, Sec.1, Hsin Tai Wu Rd., Hsichih,
Taipei Hsien 221, Taiwan, R.O.C.

Title: Change History

Size: A3 | Document Number: OAK14 Chief River DIS | Rev: A00

Date: Wednesday, September 05, 2012 | Sheet 104 of 105

Version	Date	PAGE	Description of Required Change
X02	7/30	P58	Add delay circuit at Audio Combo Jack
X02	7/30		update the connector symble, base on ME connector list 7/16
X02	7/30	P69	Remove the Key board back ligh circuit
X02	7/31		Modify 0 ohm to short PAD
X02	7/31	P71	Dummy DB1 circuit
X02	8/1	P58	Change HPMIC1 source and related circuit
X02	8/1		update power team request change 8/1
X02	8/6	P27	Move SERIES_ID to GPIO5

M14 DIS

Wistron Corporation
21F, 88, Sec.1, Hsin Tai Wu Rd., Hsichih,
Taipei Hsien 221, Taiwan, R.O.C.

Title: Change History

Size: A3 | Document Number: OAK14 Chief River DIS | Rev: A00

Date: Wednesday, September 05, 2012 | Sheet 105 of 105

Version	Date	PAGE	Description of Required Change
A00	9/4		change 0 ohm to short pad
A00	9/4		combine CM choke & 0 ohm
A00	9/4		change close gap & DB1 to symble with solder mask
A00	9/4	27	change PCB version from SC to -1
A00	9/4	74	Replace EC7401 ~ EC7410 from 10p to 6.8p
A00	9/4	61	Remove CM Choke at USB3.0 side, dummy U6204 U6205

M14 DIS

Wistron Corporation
21F, 88, Sec.1, Hsin Tai Wu Rd., Hsichih,
Taipei Hsien 221, Taiwan, R.O.C.

Title: Change History

Size: A3 | Document Number: OAK14 Chief River DIS | Rev: A00

Date: Wednesday, September 05, 2012 | Sheet 106 of 106