Danzka Dubra 08

SI1_BUILD

2007.11.02

DATE	CHANGE NO.	REV

	EE	DATE	POWER	DATE
DRAWER				
DESIGN				
CHECK				
RESPONSIBLE				

SIZE = 3 VER :

FILE NAME : XXXX-XXXXXX-XX

P/N XXXXXXXXXXXX

INVENTEC

TITLE DD08

SIZE	CODE	DOC. NUMBER	REV
A3	CS	Model_No	AX1

SHEET 1 OF 69

www.VinaFix.vn

TABLE OF CONTENTS

PAGE
5- DC& BATTERY CHARGER
6- SELECT & BATTERY CONN
7- SYSTEM POWER(3V/5V)
8- SYSTEM POWER(+V1.8/+V1.25S)
9- GRAPHIC POWER(+VGFX_CORE)
10- SYSTEM POWER(+VCCP/+V1.5S)
11- CPU POWER(VCC_CORE)
12- DDR TERMINATION VOLTAGE
13- POWER(SLEEP)
14- POWER(SEQUENCE)
15- CLOCK_GENERATOR
16- PENRYN-1
17- PENRYN-2
18- PENRYN-3
19- PENRYN-4
20- THERMAL&FAN CONTROLLER
21- CANTIGA-1
22- CANTIGA-2
23- CANTIGA-3-HOST
24- CANTIGA-4-DDR2
25- CANTIGA-5-POWER
26- CANTIGA-6-POWER
27- CANTIGA-7-POWER

PAGE
28- DDR2-DIMM0
29- DDR2-DIMM1
30- DDR2-DAMPING
31- CRT& SVIDEO CONN
32- LCD CONN
33- ICH9-1
34- ICH9-2
35- ICH9-3
36- ICH9-4
37- ICH9-5
38- HDD CONN
39- ODD CONN
40- USB CONN/USB(DB)
41- FINGER PRINT&BlueTooth
42- TPM V1.2
43- FWH/SPI/HDD PROTECTION
Webcam & 5 IN 1connector
44- KBC
45- INT.KBC/POINT DEVICES
46- SUPER I/O
47-AUDIO CONN AND EXPRESS CARD CONN
48- DVI CONTROLLER
49- 1394
50- LAN INTERFACE-1
51- LAN RJ45 CONN

PAGE
52- MINI CARD(WWAN/WLAN)& SIM CARD
53- DOCKING CONN
54- LED/SWITCH CONN
55- SCREW
56- SWITCH DOUGHTER BOARD
57- Finger Print board
58- 7 IN 1 CONTROLLER(TT)
59- 7 IN 1 CONNECTOR(TT)
60- 7 IN 1 CONTROLLER(TS)
61- 7 IN 1 CONNECTOR(TS)
62- AUDIO CNTR
63- AZALIA CODEC
64- EARPHONE & MIC JACK
65- AUDIO AMP &INT. SPEAKER CNTR
66- MDC CNTE
67- NEW CARD CNTR
68- NEW CARD

INVENTEC			
TITLE DD08			
SIZE A3	CODE CS	DOC.NUMBER Model_No	REV AXI
CHANGE by EDI CHEN	26-Oct-2007	SHEET 2 OF 69	

www.VinaFix.vn

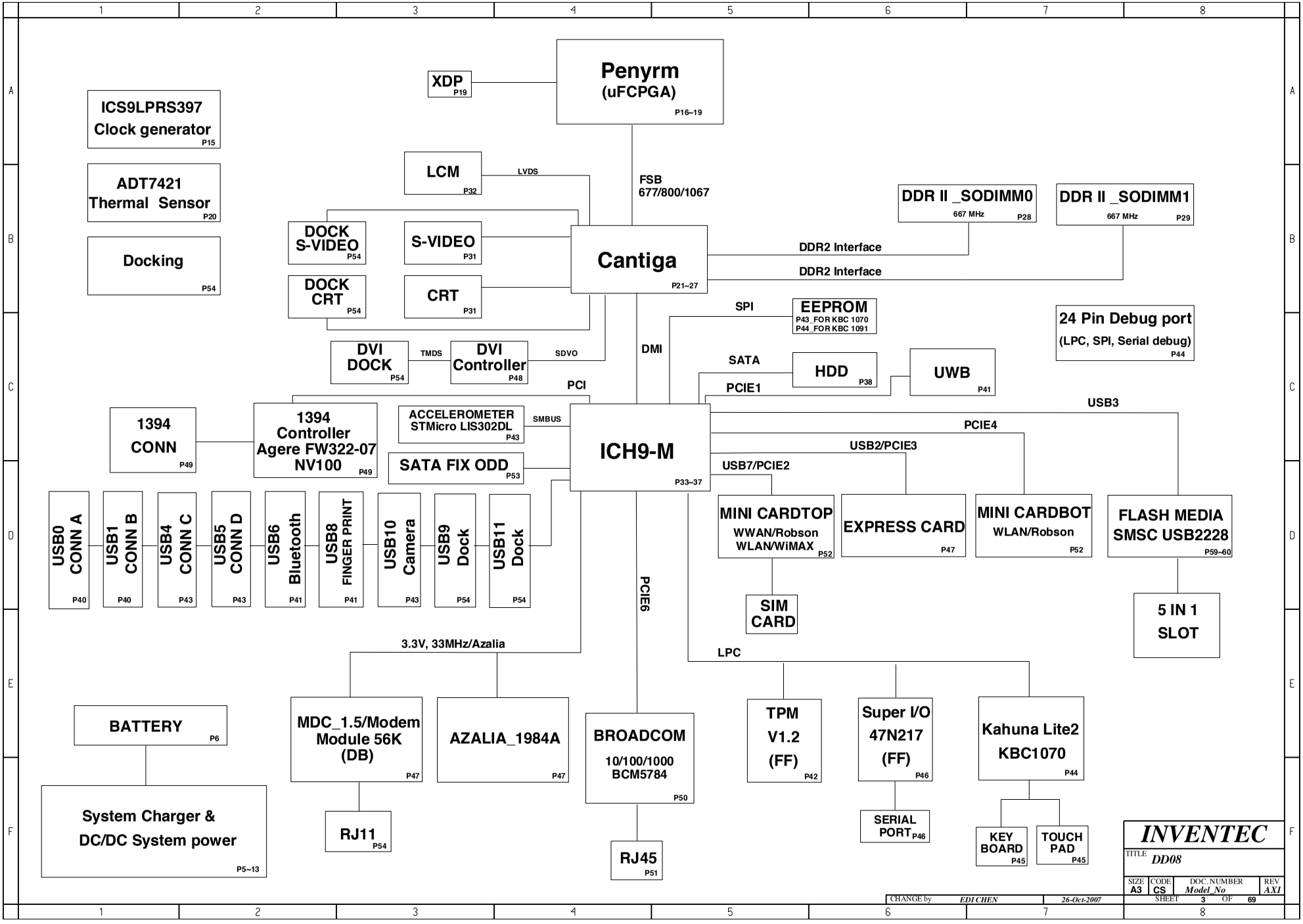

www.VinaFix.vn

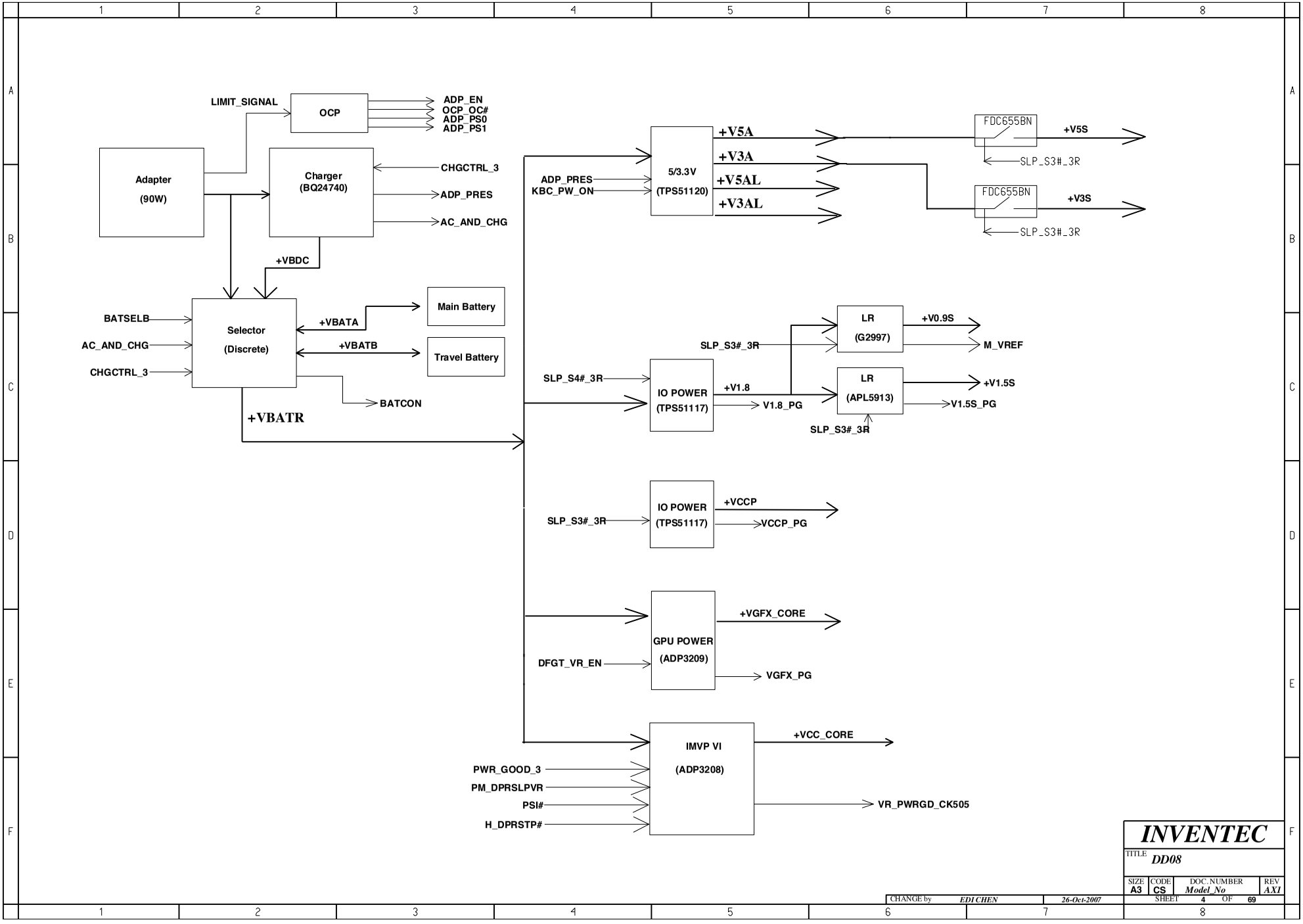

www.VinaFix.vn

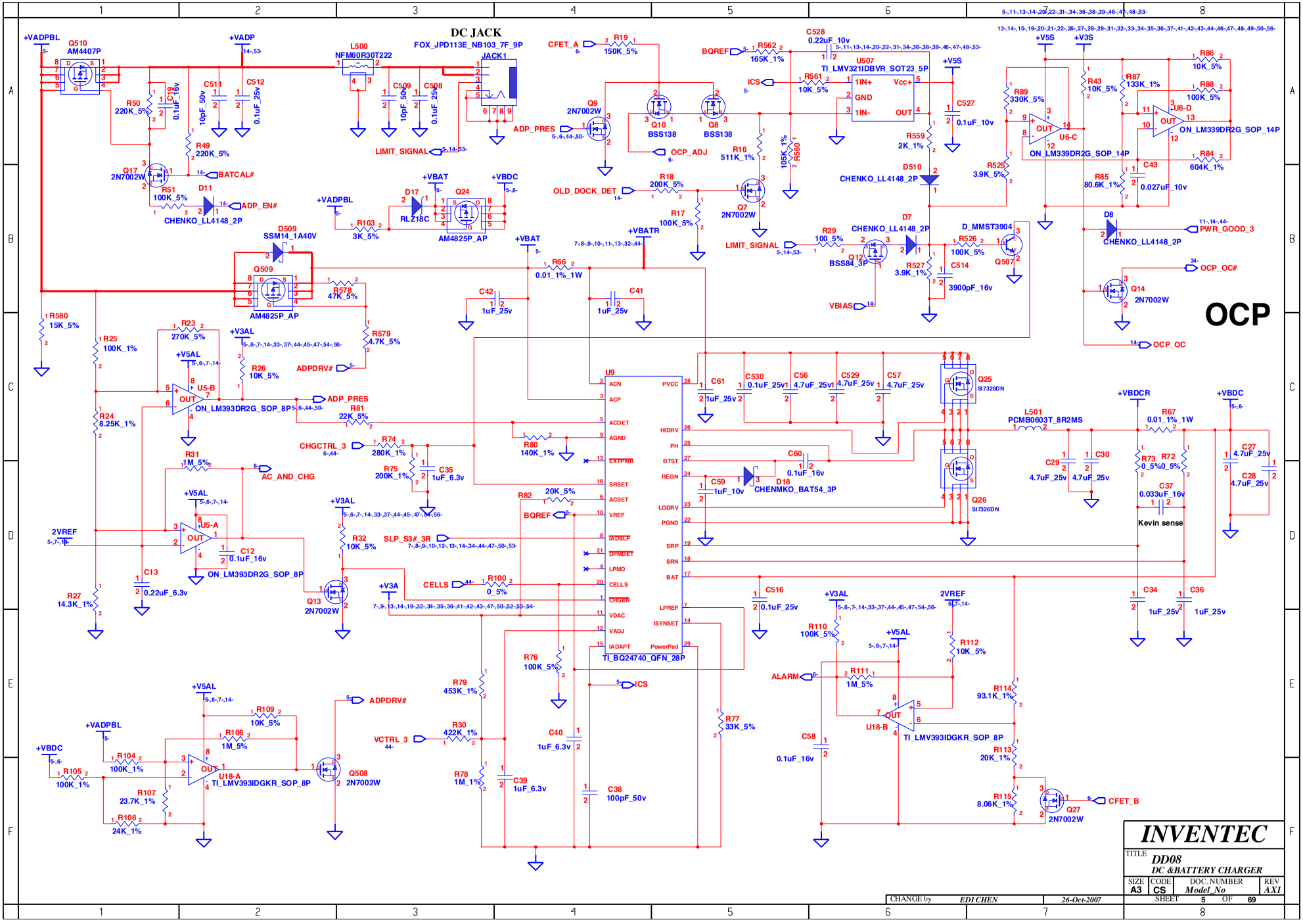

www.VinaFix.vn

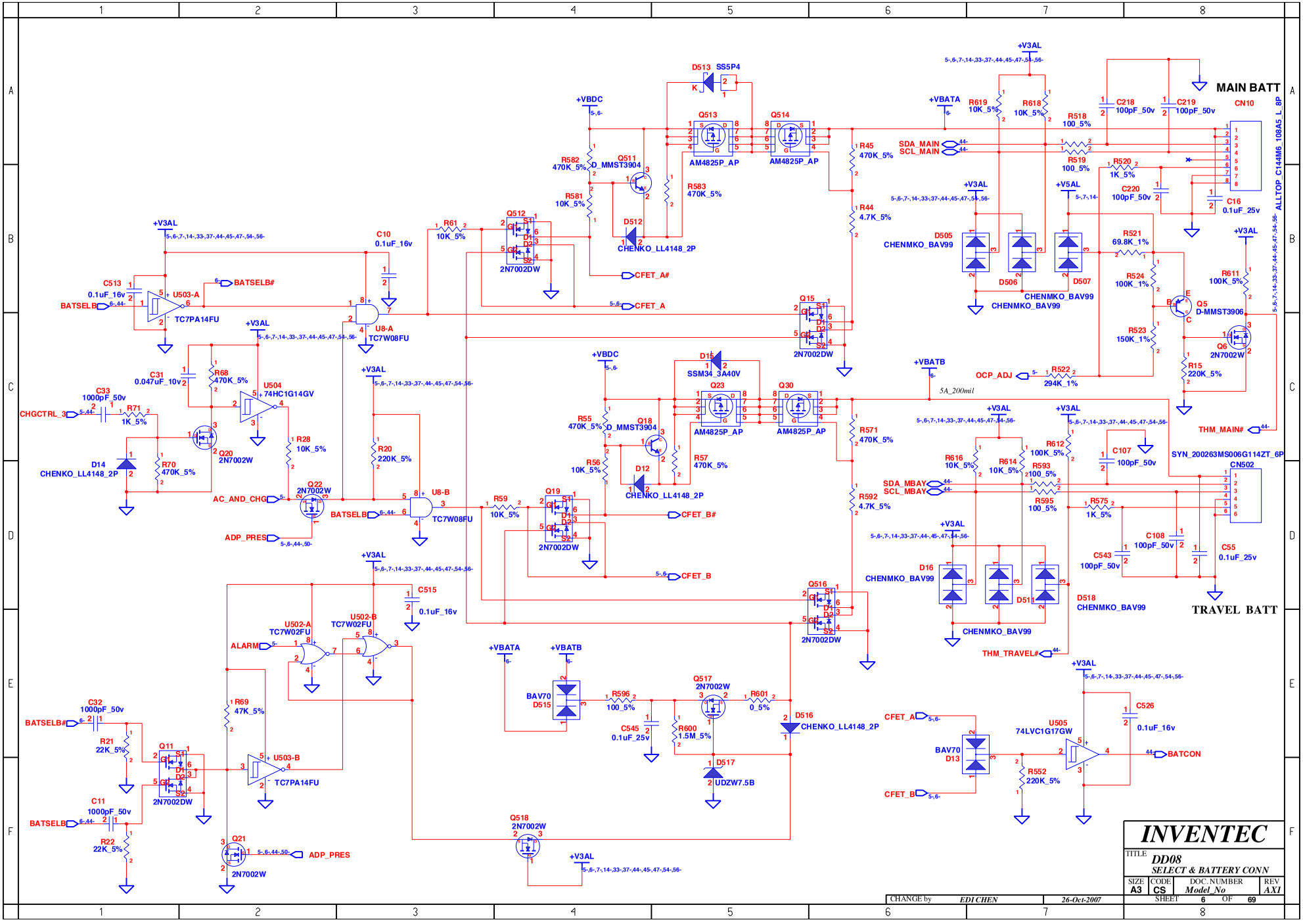

www.VinaFix.vn

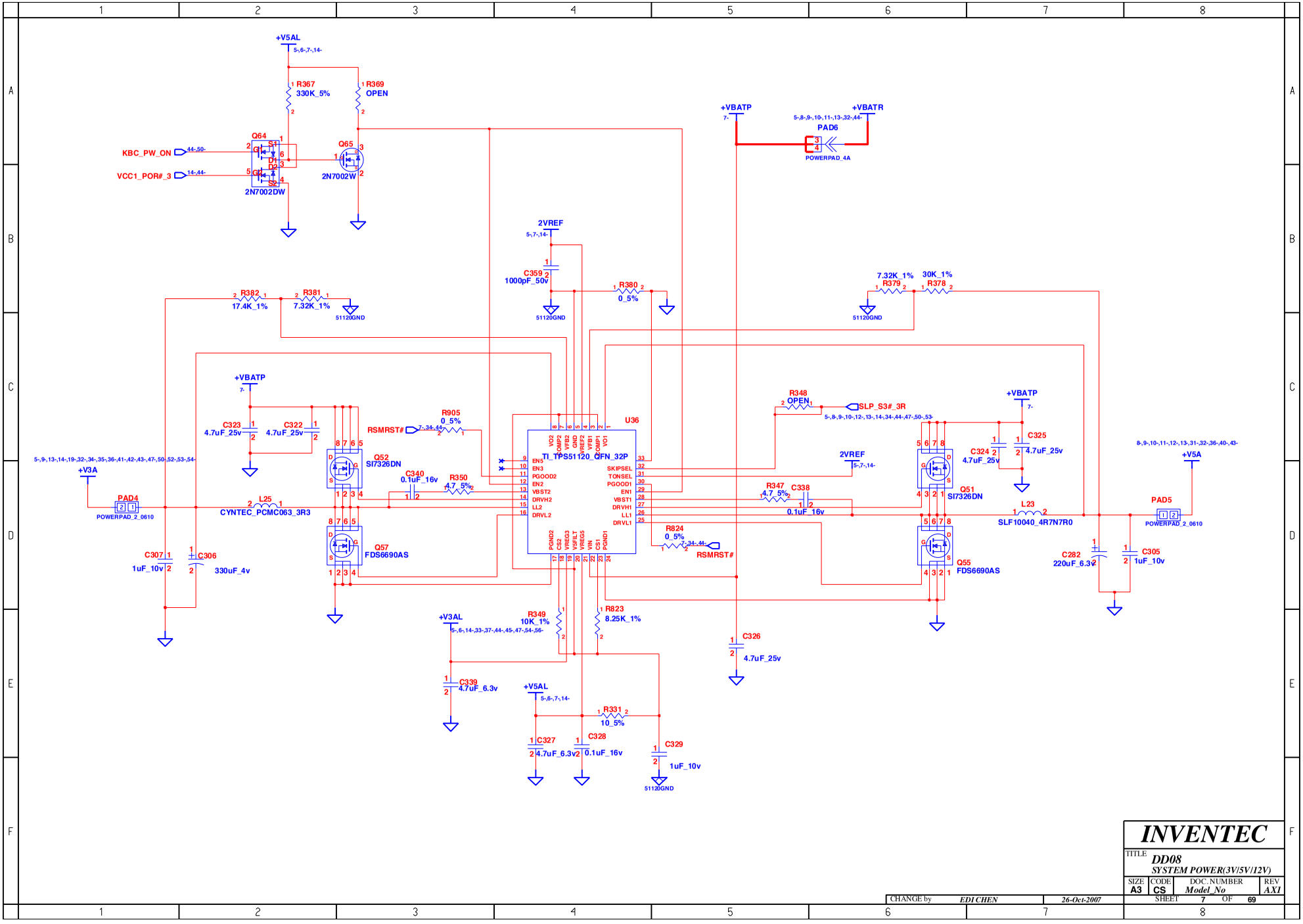

www.VinaFix.vn

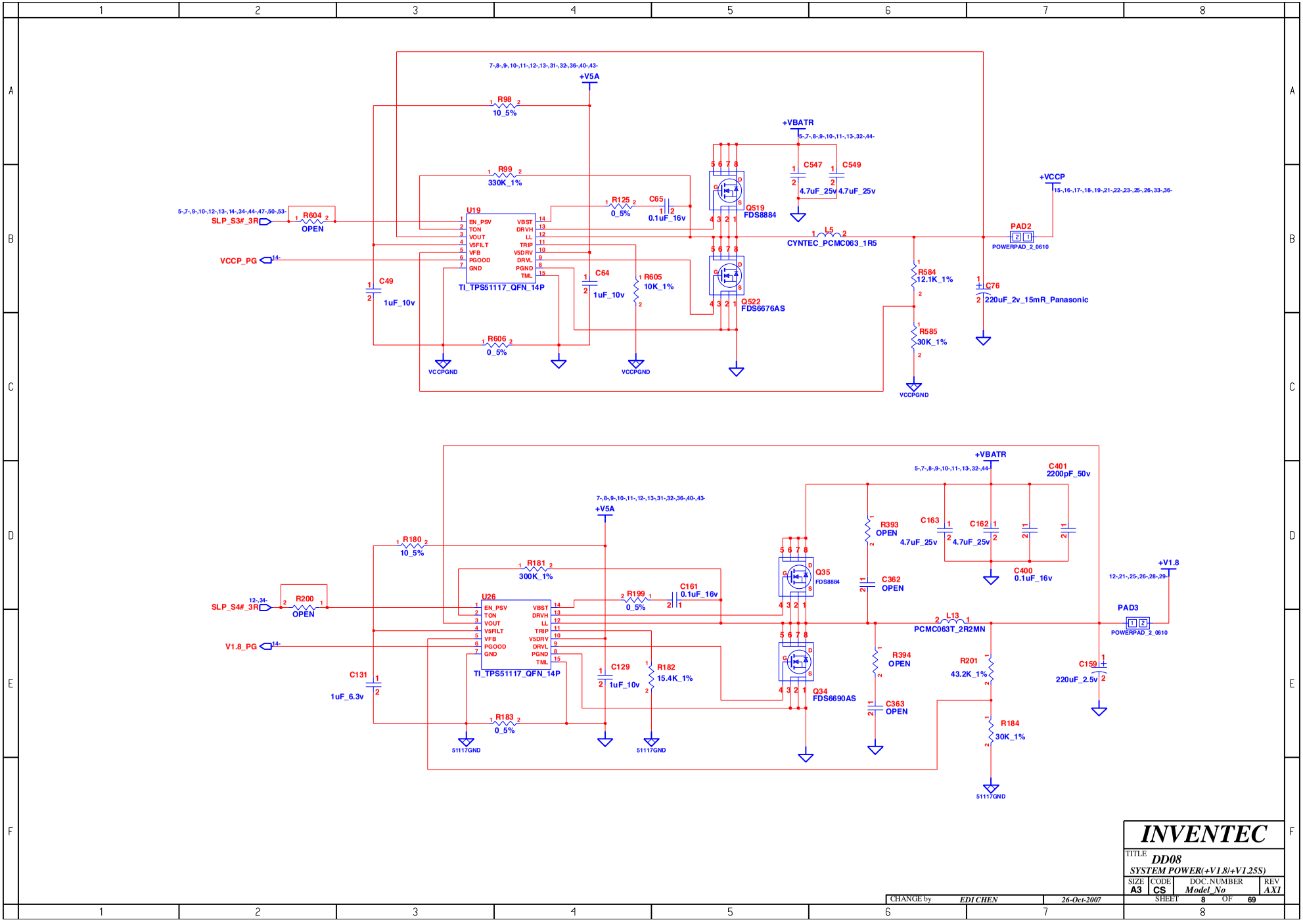

www.VinaFix.vn

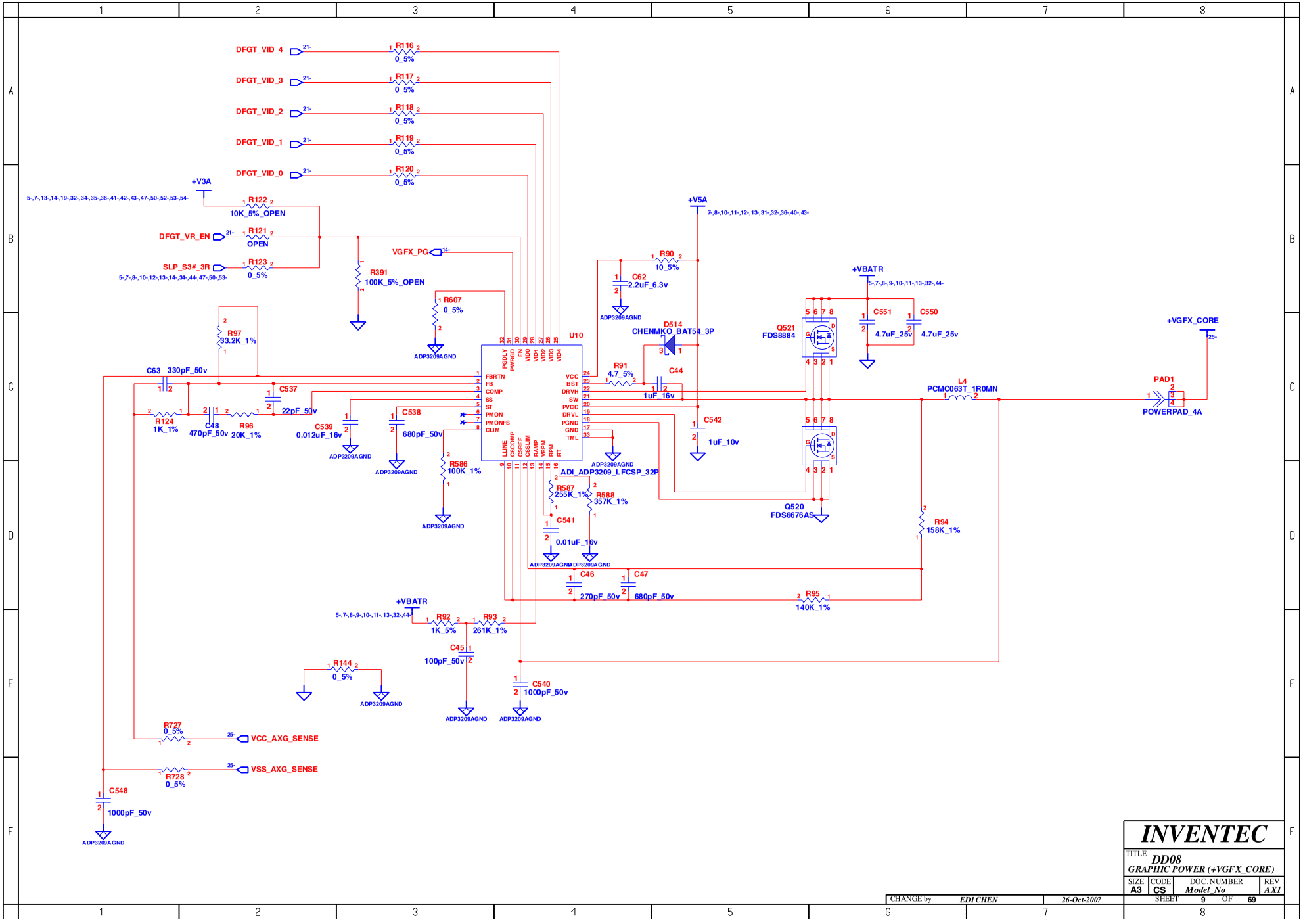

INVENTEC			
TITLE DD08 GRAPHIC POWER (+VGFX_CORE)			
SIZE A3	CODE CS	DOC.NUMBER Model_No	REV AXI
CHANGE by EDI CHEN	26-Oct-2007	SHEET 9 OF 69	

www.VinaFix.vn

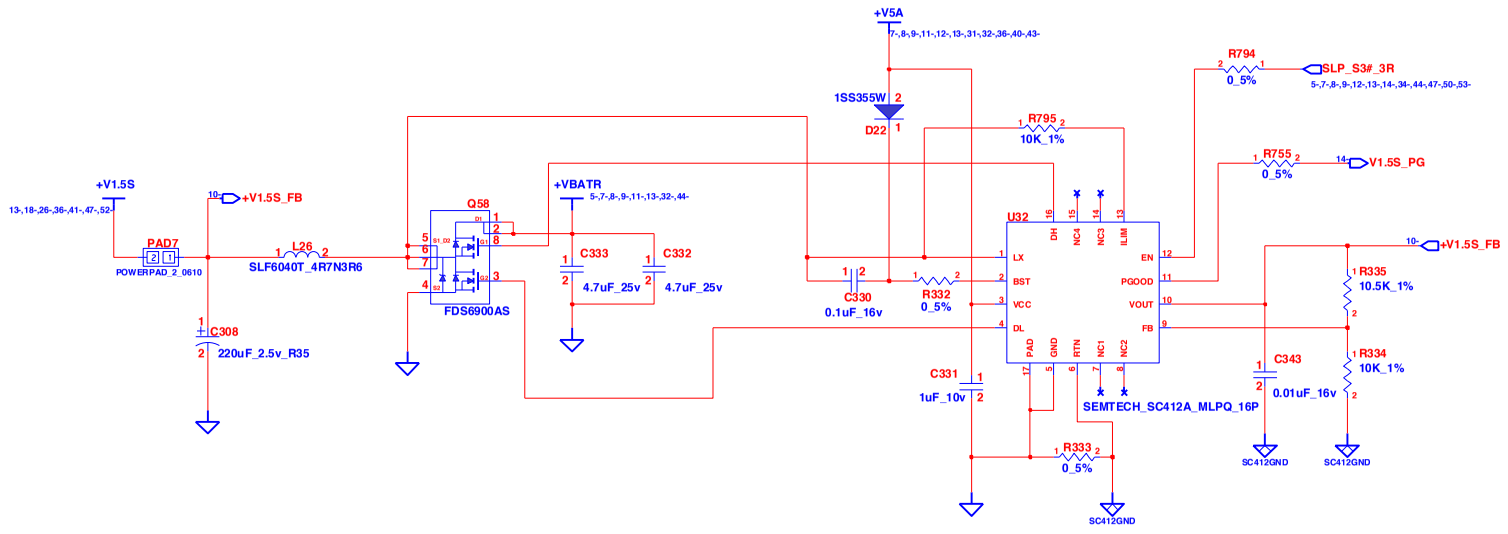

CHANGE by	EDI CHEN	26-Oct-2007	

INVENTEC

TITLE **DD08**
SYSTEM POWER(+VCCP/+V1.5S)

SIZE	CODE	DOC.NUMBER	REV
A3	CS	Model_No	AX1

SHEET 10 OF 69

www.VinaFix.vn

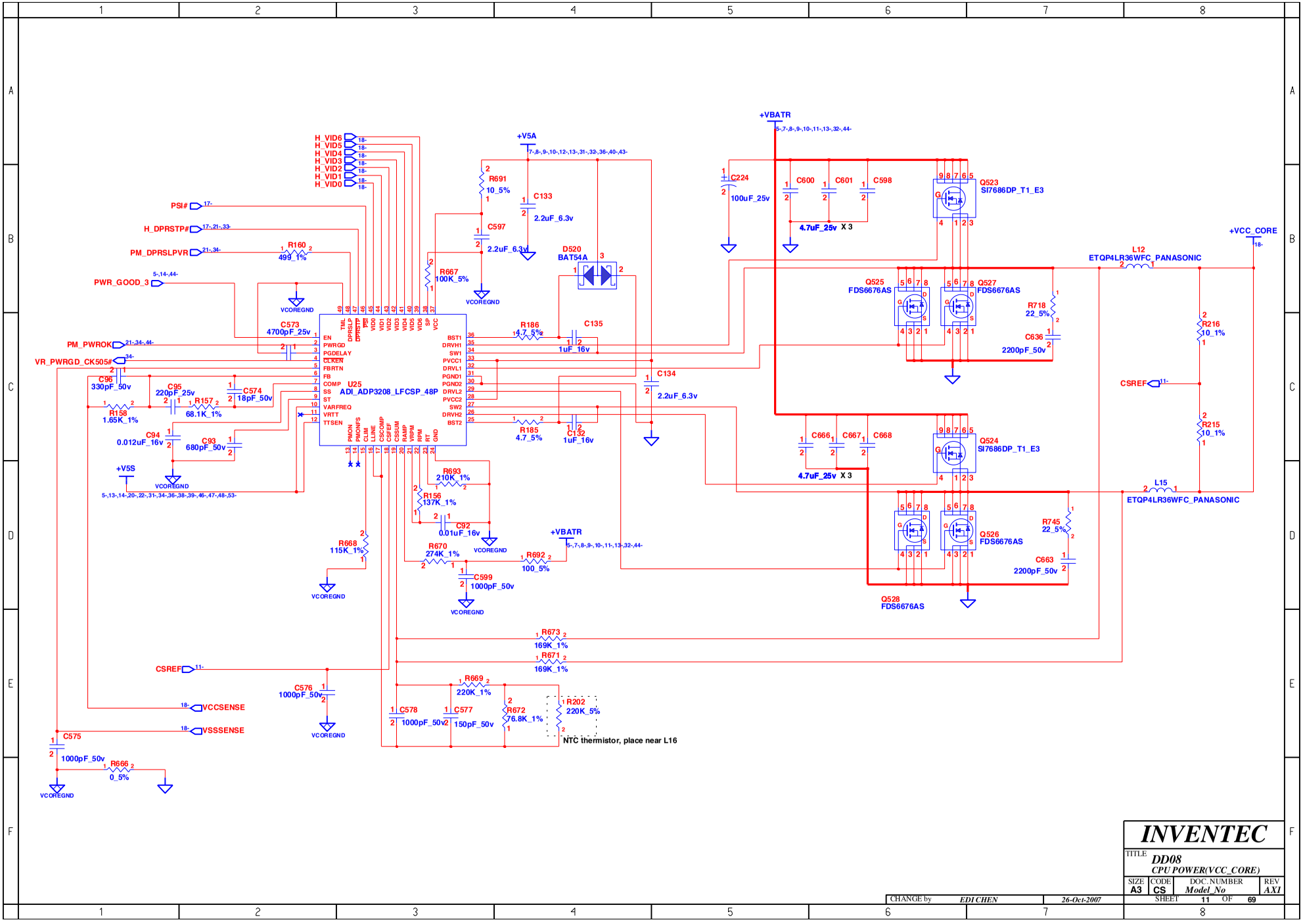

www.VinaFix.vn

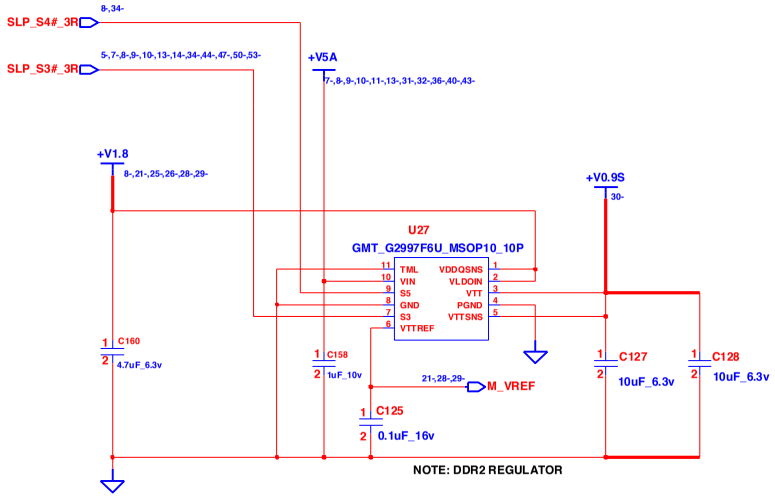

CHANGE by	EDI CHEN	26-Oct-2007	

INVENTEC

TITLE **DD08**
DDR TERMINATION VOLTAGE

SIZE	CODE	DOC. NUMBER	REV
A3	CS	Model_No	AXI

SHEET 12 OF 69

www.VinaFix.vn

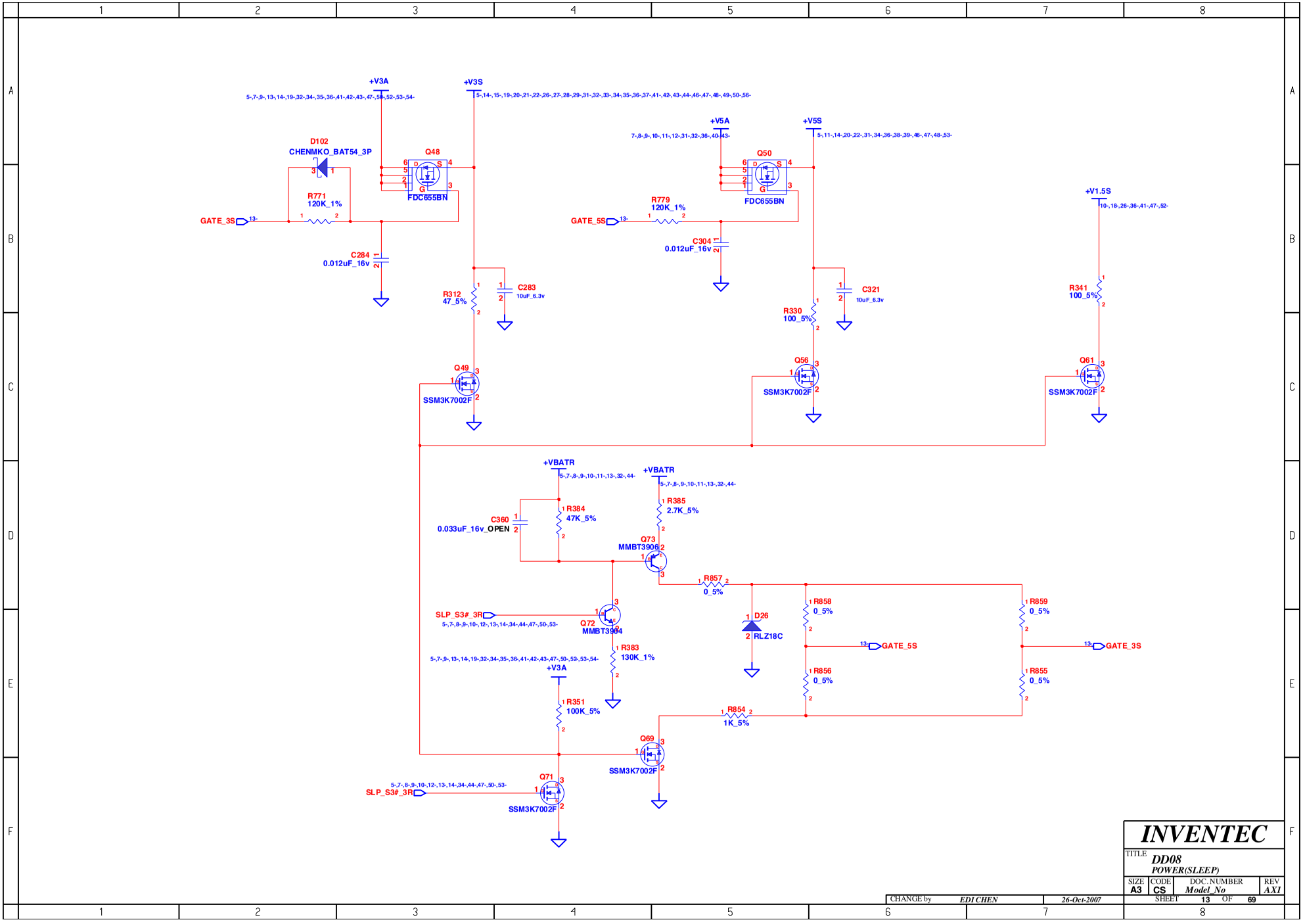

www.VinaFix.vn

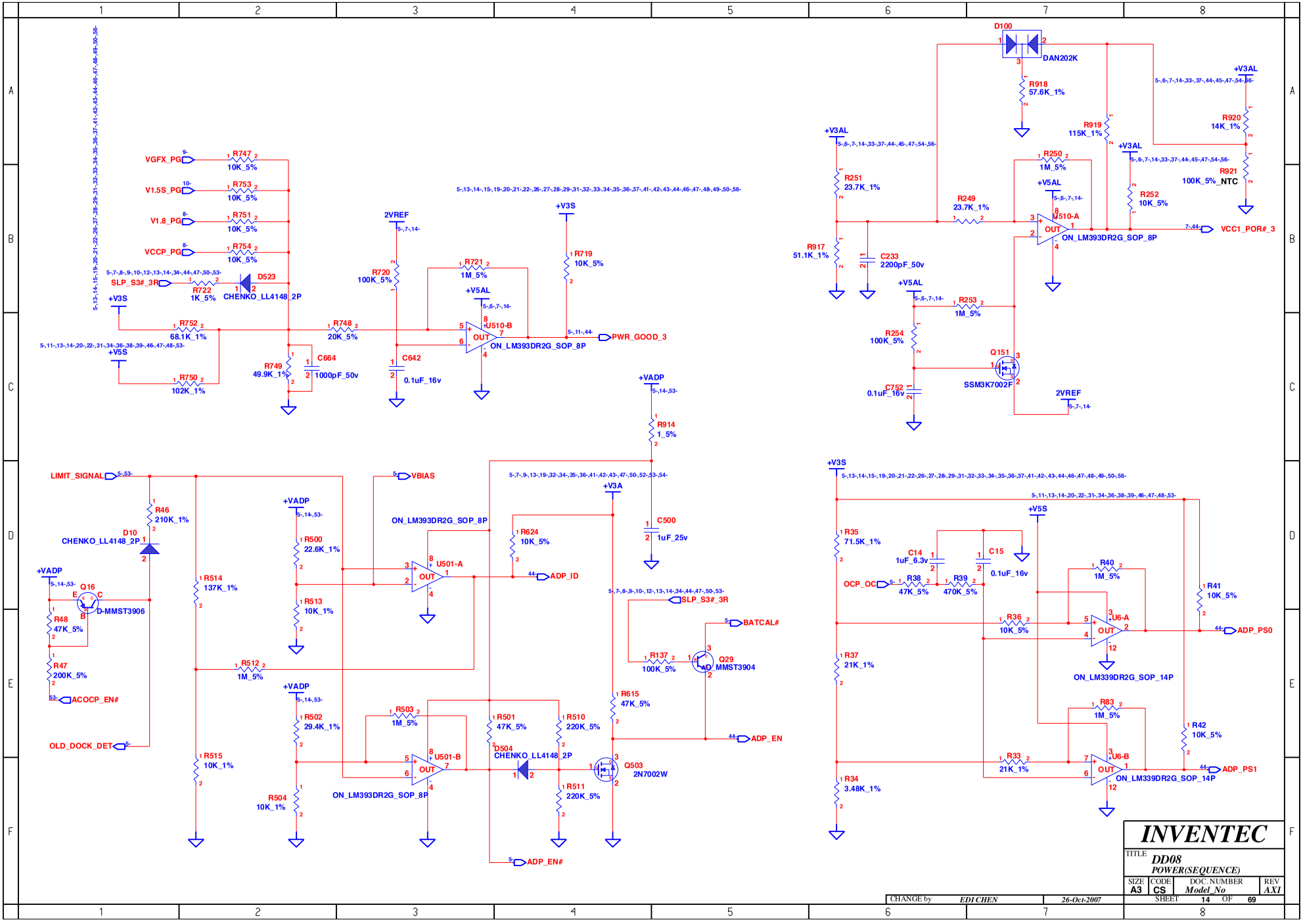

www.VinaFix.vn

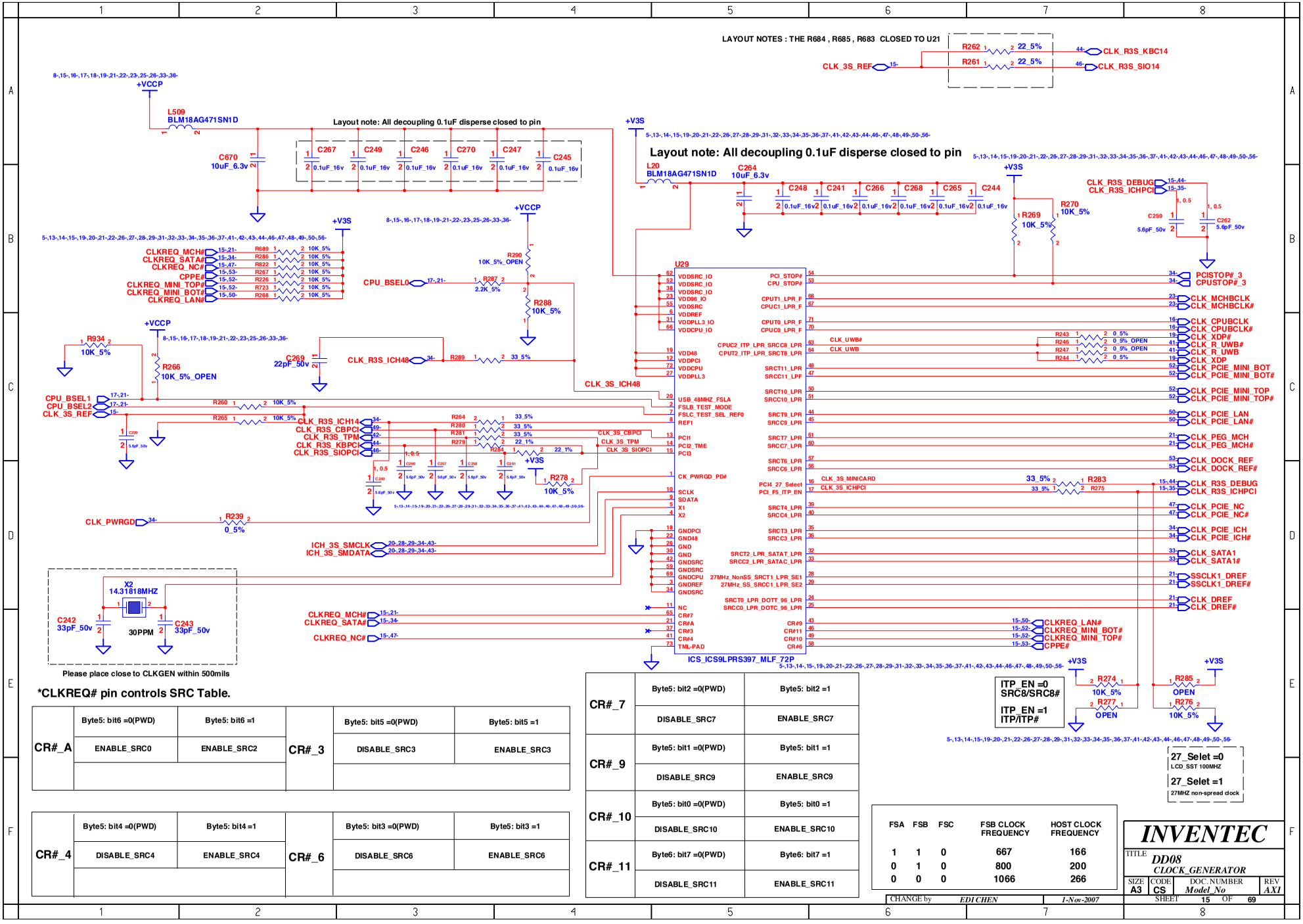

*CLKREQ# pin controls SRC Table.

CR#_A	Byte5: bit6 =0(PWD)	Byte5: bit6 =1	CR#_3	Byte5: bit5 =0(PWD)	Byte5: bit5 =1
	ENABLE_SRC0	ENABLE_SRC2		DISABLE_SRC3	ENABLE_SRC3

CR#_4	Byte5: bit4 =0(PWD)	Byte5: bit4 =1	CR#_6	Byte5: bit3 =0(PWD)	Byte5: bit3 =1
	DISABLE_SRC4	ENABLE_SRC4		DISABLE_SRC6	ENABLE_SRC6

CR#_7	Byte5: bit2 =0(PWD)	Byte5: bit2 =1
	DISABLE_SRC7	ENABLE_SRC7
CR#_9	Byte5: bit1 =0(PWD)	Byte5: bit1 =1
	DISABLE_SRC9	ENABLE_SRC9
CR#_10	Byte5: bit0 =0(PWD)	Byte5: bit0 =1
	DISABLE_SRC10	ENABLE_SRC10
CR#_11	Byte6: bit7 =0(PWD)	Byte6: bit7 =1
	DISABLE_SRC11	ENABLE_SRC11

FSA	FSB	FSC	FSB CLOCK FREQUENCY	HOST CLOCK FREQUENCY
1	1	0	667	166
0	1	0	800	200
0	0	0	1066	266

CHANGE by EDI CHEN 1-Nov-2007

INVENTEC

TITLE DD08 CLOCK_GENERATOR

SIZE A3 | CODE CS | DOC.NUMBER Model_No | REV AXI

SHEET 15 OF 69

www.VinaFix.vn

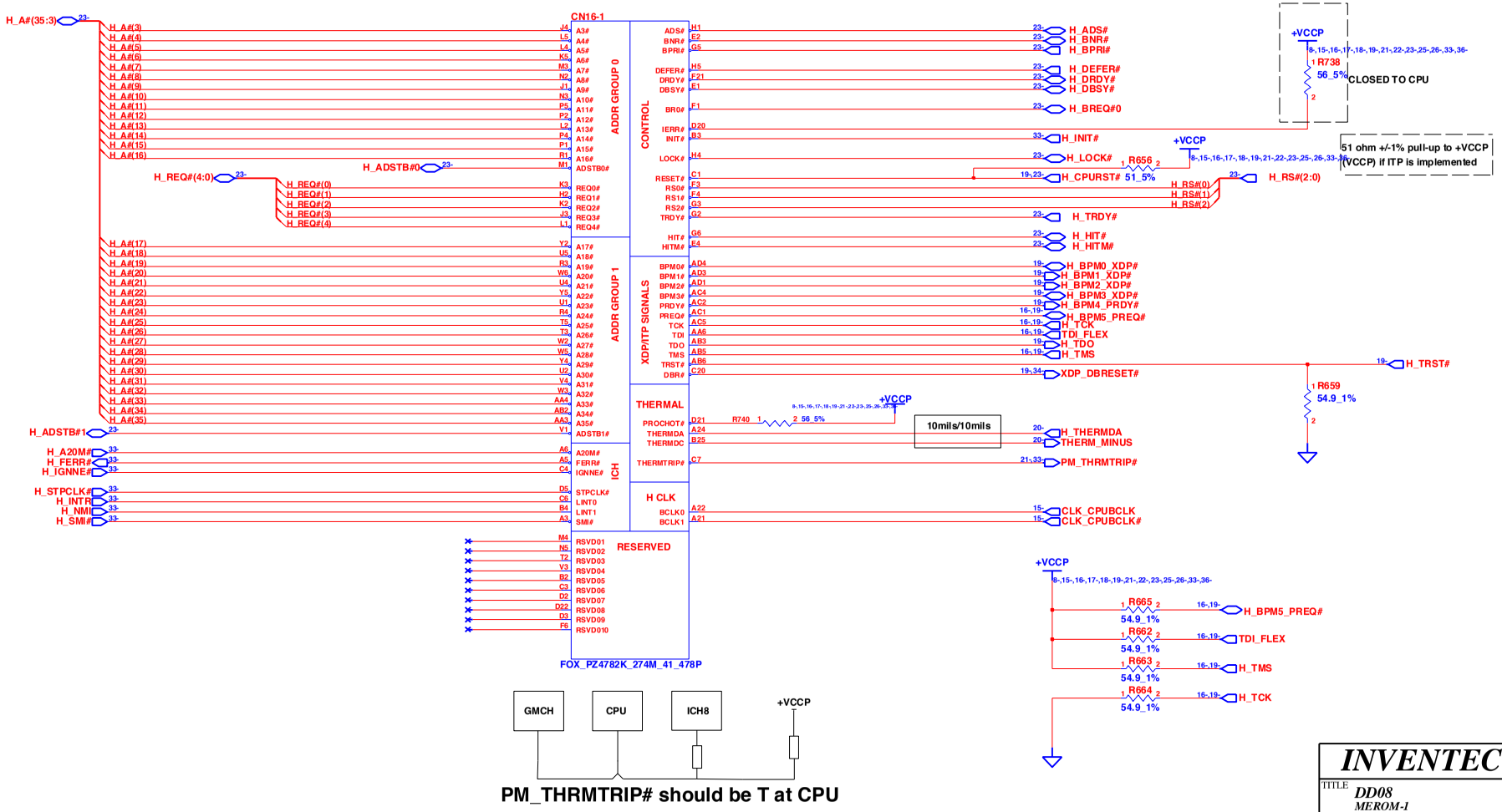

INVENTEC			
TITLE DD08 MEROM-1			
SIZE A3	CODE CS	DOC.NUMBER Model_No	REV AX1
CHANGE by EDI CHEN	26-Oct-2007	SHEET 16 OF 69	

www.VinaFix.vn

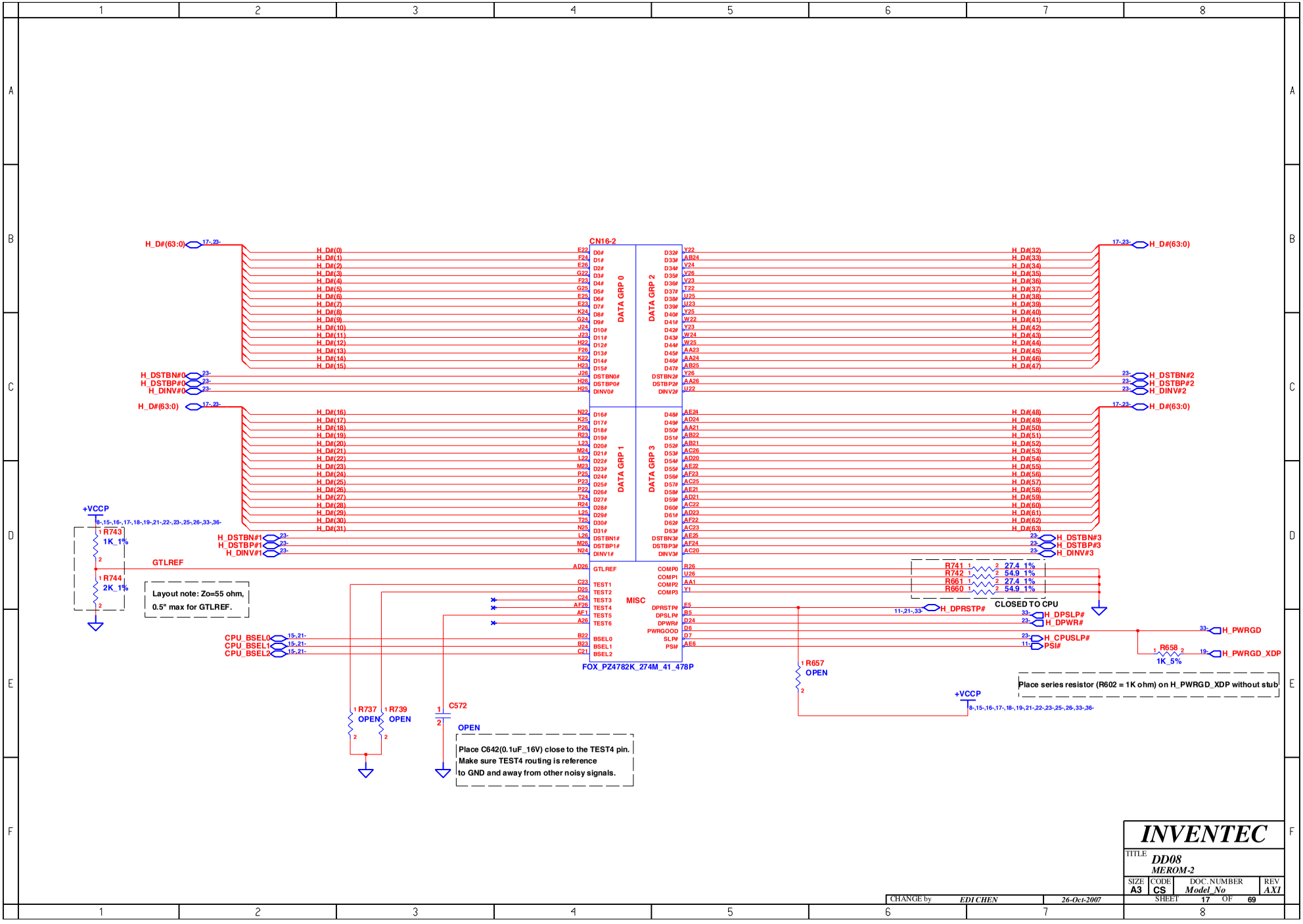

INVENTEC			
TITLE DD08 MEROM-2			
SIZE A3	CODE CS	DOC. NUMBER Model_No	REV AX1
CHANGE by EDI CHEN	26-Oct-2007	SHEET 17 OF 69	

www.VinaFix.vn

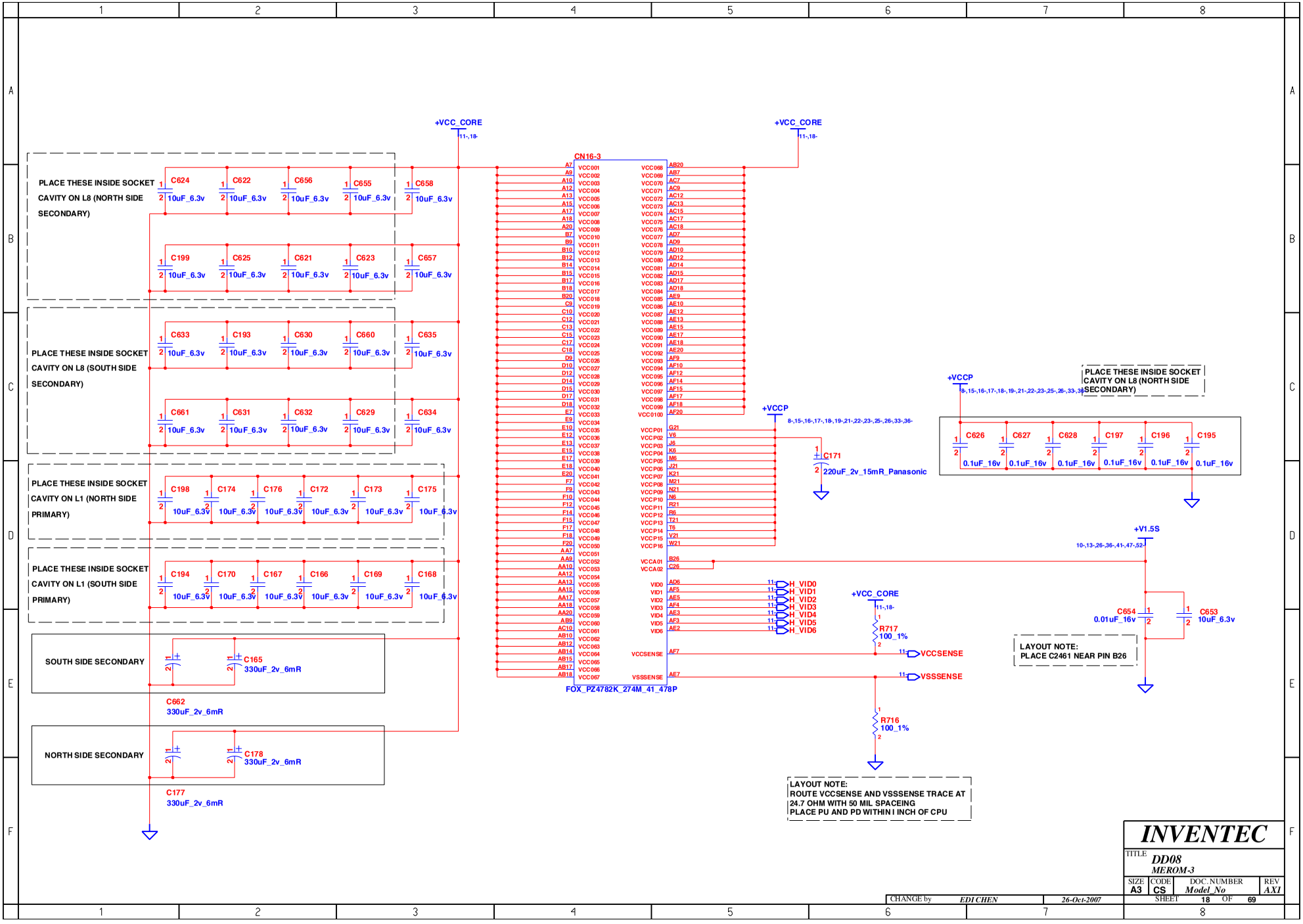

www.VinaFix.vn

XDP CONNECTOR

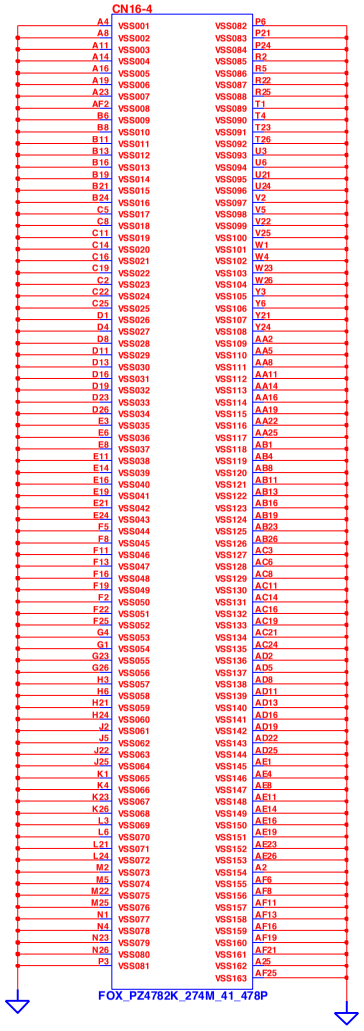

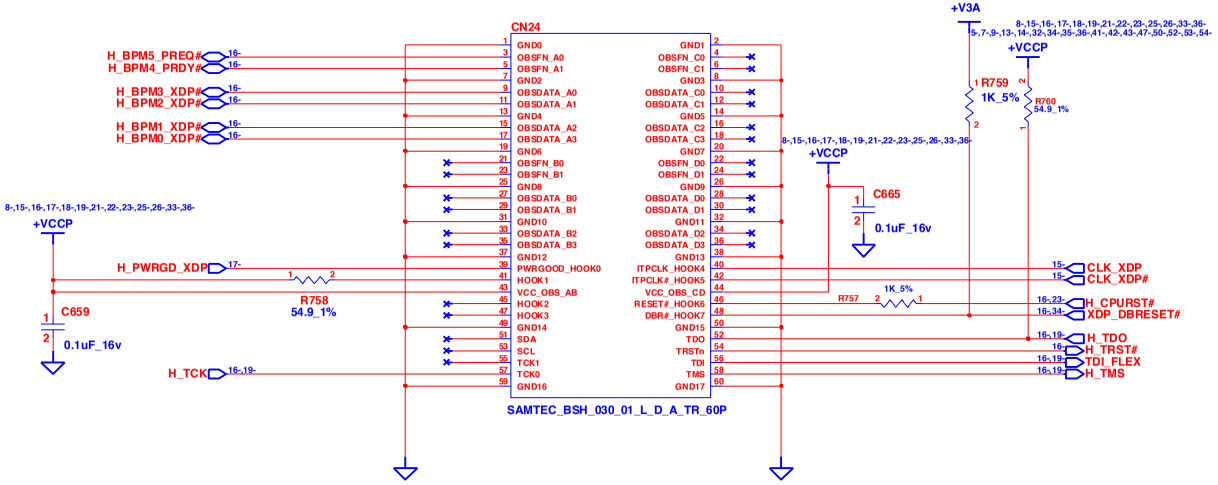

JTAG DEBUG CONNECTOR

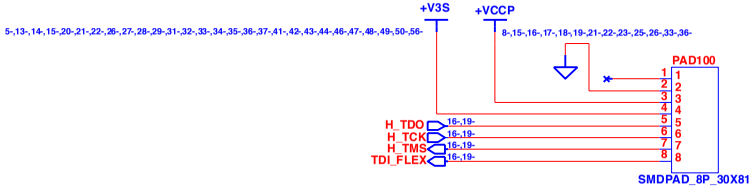

CHANGE by	EDI CHEN	2-Nov-2007	

INVENTEC

TITLE: DD08 MEROM-4

SIZE	CODE	DOC. NUMBER	REV
A3	CS	Model_No	AX1

SHEET 19 OF 69

www.VinaFix.vn

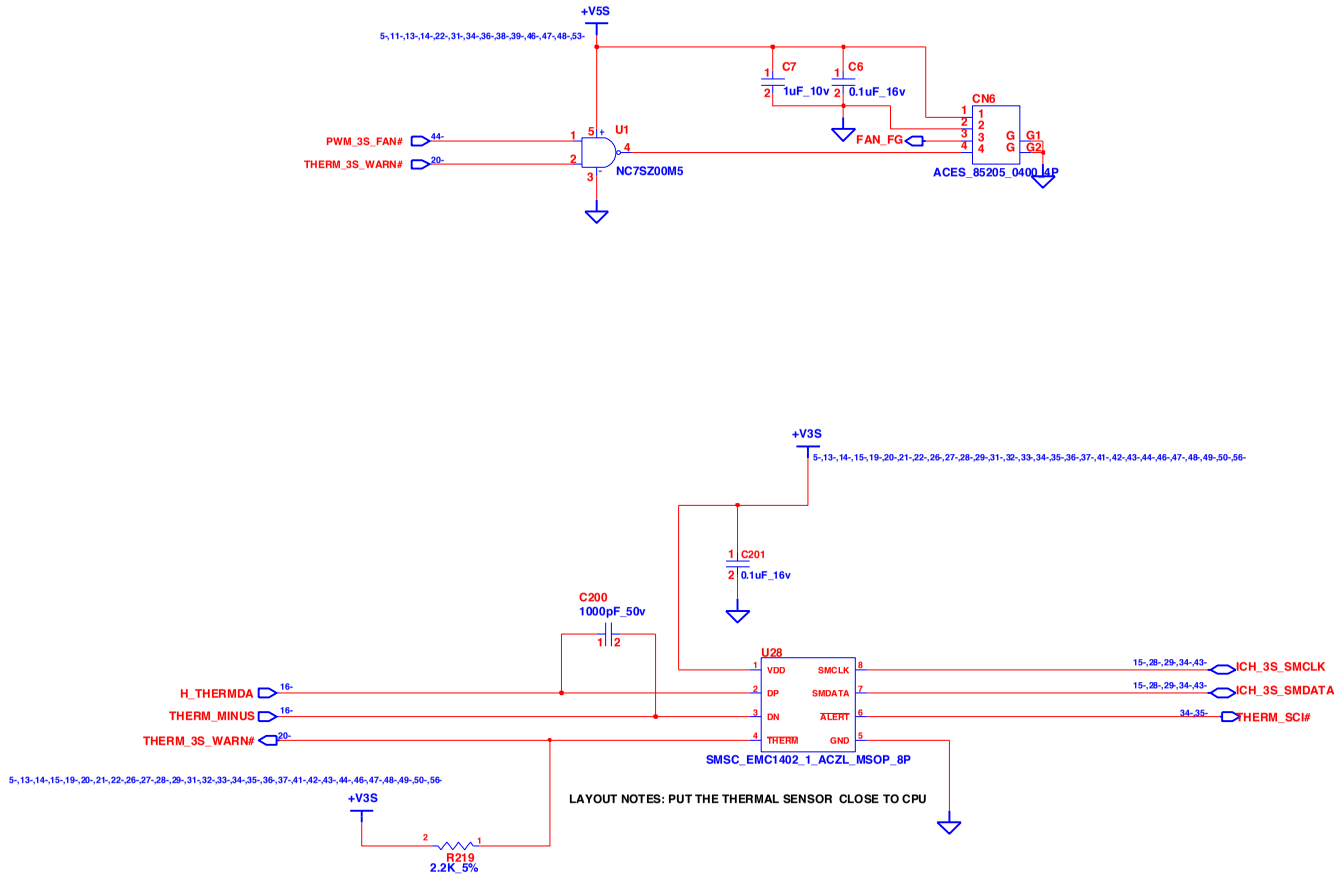

CHANGE by	EDI CHEN	26-Oct-2007	

INVENTEC

TITLE: *DD08*
THERMAL&FAN CONTROLLER

SIZE	CODE	DOC.NUMBER	REV
A3	CS	Model_No	AX1

SHEET 20 OF 69

www.VinaFix.vn

MCH_CFG(5)	LOW=DMIx2 HIGH=DMIx4

MCH_CFG(7) (CPU Strap)	LOW=RSVD HIGH=Mobile CPU

MCH_CFG(9) PCIE Graphics Lane	LOW=Reverse Lane HIGH=Normal operation

MCH_CFG(13:12) XOR/ALLZ	00=PARTIAL CLOCK GATING DISABLE 01=XOR MODE ENABLE 10=ALL-Z MODE ENABLE 11=NORMAL OPERATION

MCH_CFG(16) (FSB Dynamic ODT)	LOW=Dynamic ODT Disable HIGH=Dynamic ODT Enable

NOTE: CFG[2:0] STRP : 010b : 800 MT/S
011b : 667 MT/S

NOTE : USE 4K-OHM RESISTOR WHEN INSTALLING PULL-UP/PULL-DOWN RESISTOR ON ANY MCH-CFG CONNECTION/PINS.

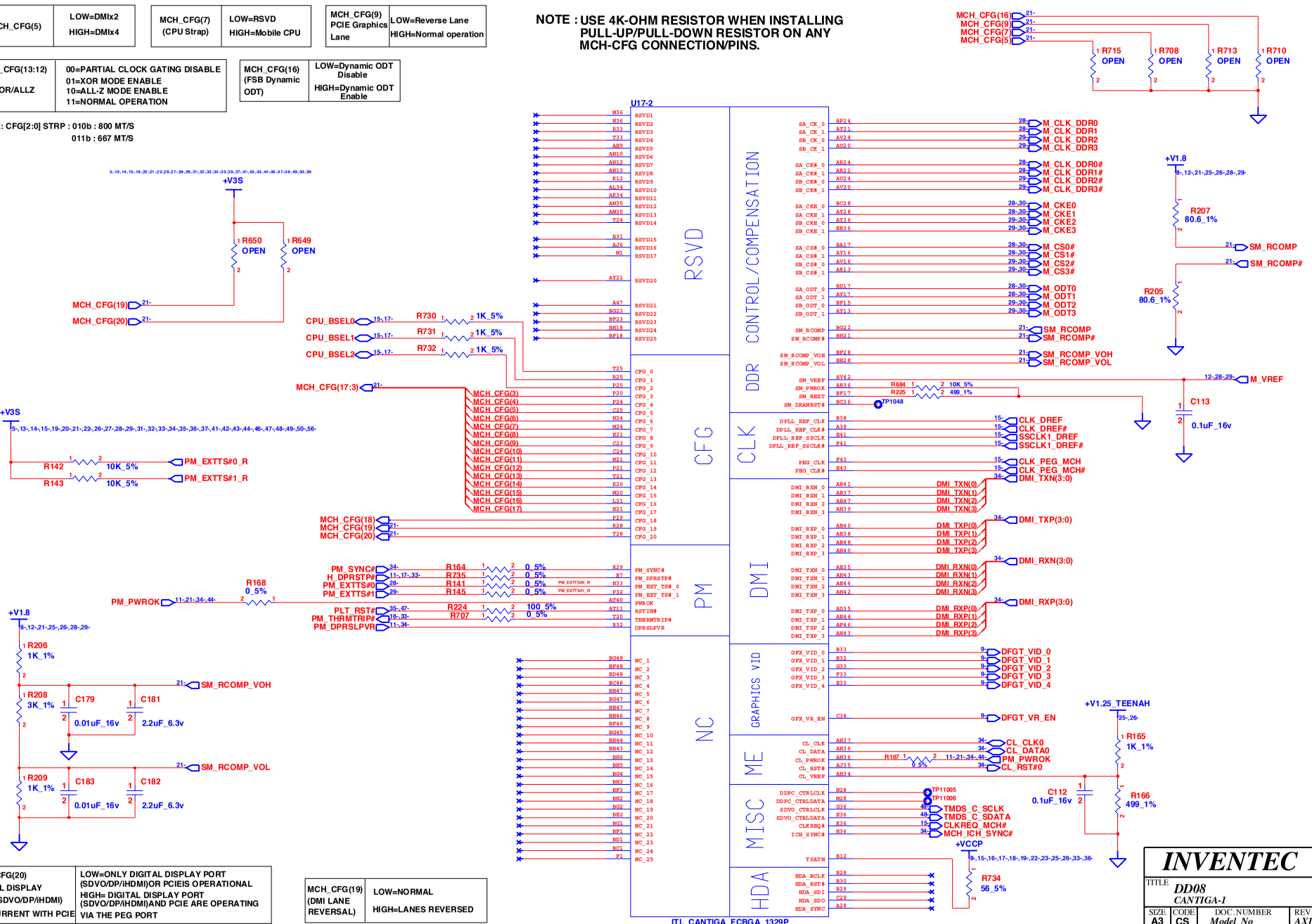

MCH_CFG(20) DIGITAL DISPLAY PORT(SDVO/DP/iHDMI) CONCURRENT WITH PCIE	LOW=ONLY DIGITAL DISPLAY PORT (SDVO/DP/iHDMI)OR PCIEIS OPERATIONAL HIGH= DIGITAL DISPLAY PORT (SDVO/DP/iHDMI)AND PCIE ARE OPERATING VIA THE PEG PORT

MCH_CFG(19) (DMI LANE REVERSAL)	LOW=NORMAL HIGH=LANES REVERSED

INVENTEC

TITLE: DD08 CANTIGA-1

SIZE	CODE	DOC. NUMBER	REV
A3	CS	Model_No	AXI

SHEET 21 OF 69

CHANGE by EDI CHEN 26-Oct-2007

www.VinaFix.vn

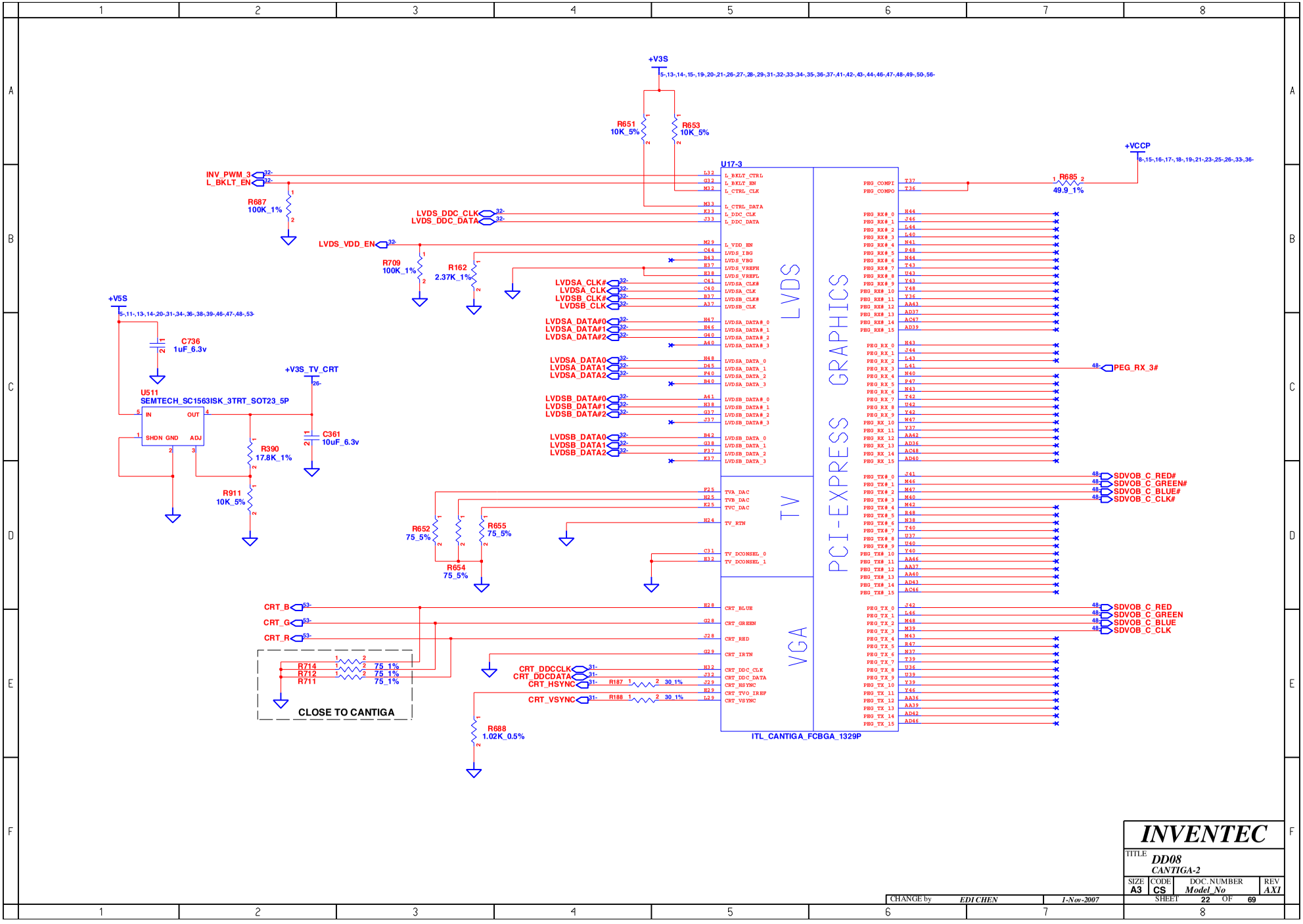

INVENTEC			
TITLE DD08 CANTIGA-2			
SIZE A3	CODE CS	DOC.NUMBER Model_No	REV AXI
CHANGE by EDI CHEN	1-Nov-2007	SHEET 22 OF 69	

www.VinaFix.vn

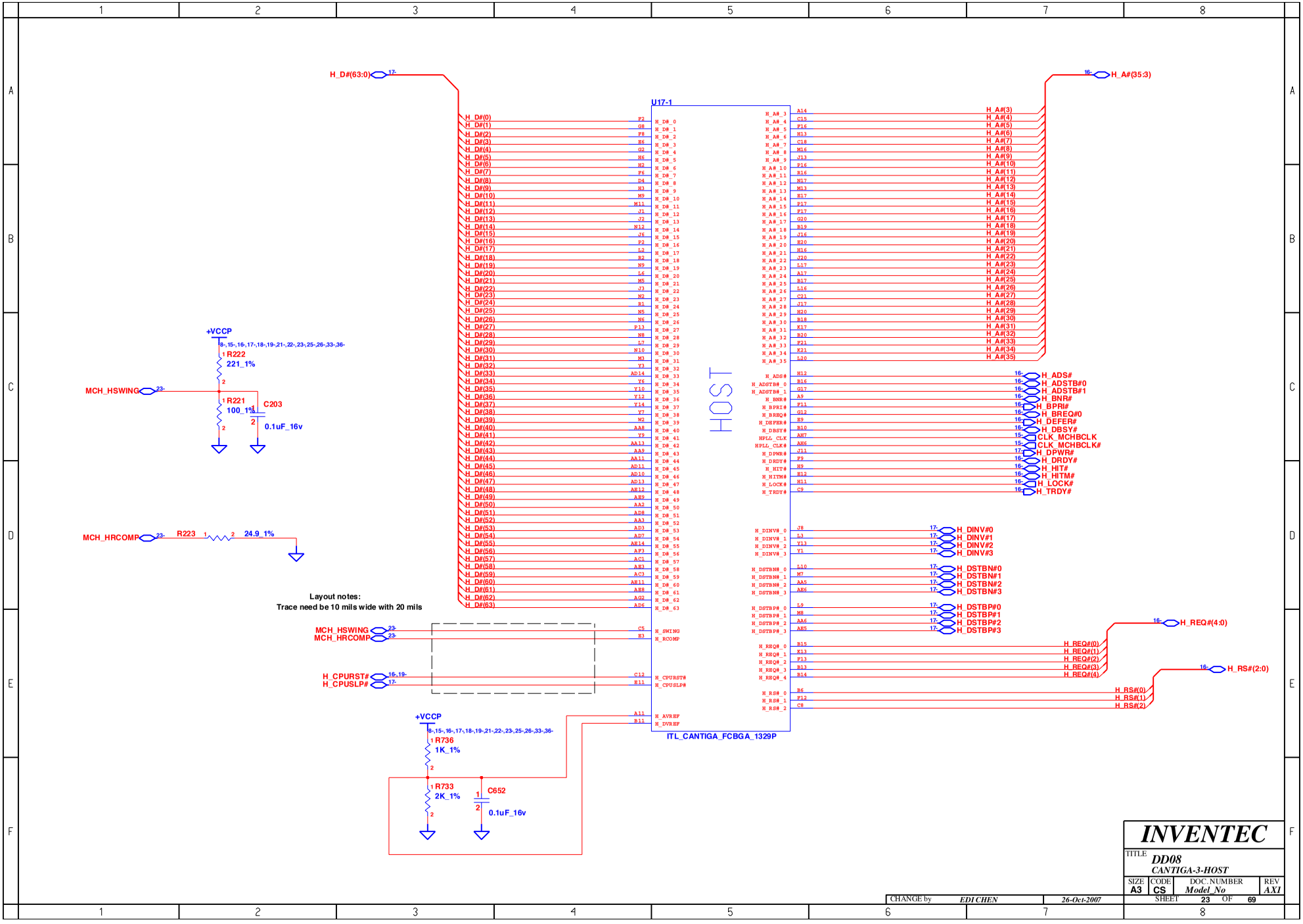

INVENTEC			
TITLE	DD08 CANTIGA-3-HOST		
SIZE A3	CODE CS	DOC.NUMBER Model_No	REV AXI
		SHEET 23 OF 69	

CHANGE by EDI CHEN 26-Oct-2007

www.VinaFix.vn

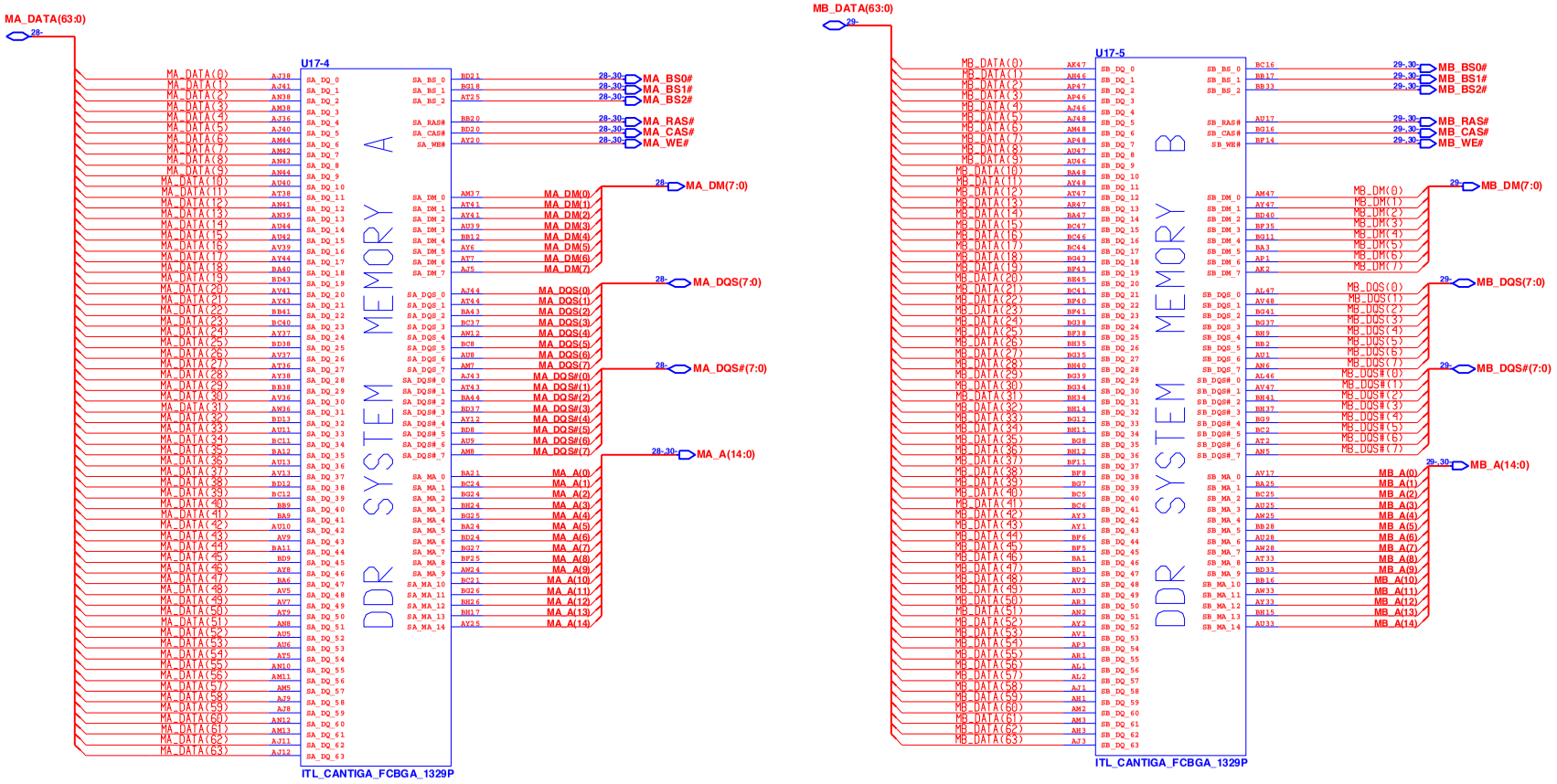

CHANGE by	EDI CHEN	26-Oct-2007	

INVENTEC

TITLE: DD08
CANTIGA-4-DDR2

SIZE	CODE	DOC.NUMBER	REV
A3	CS	Model_No	AX1

SHEET 24 OF 69

www.VinaFix.vn

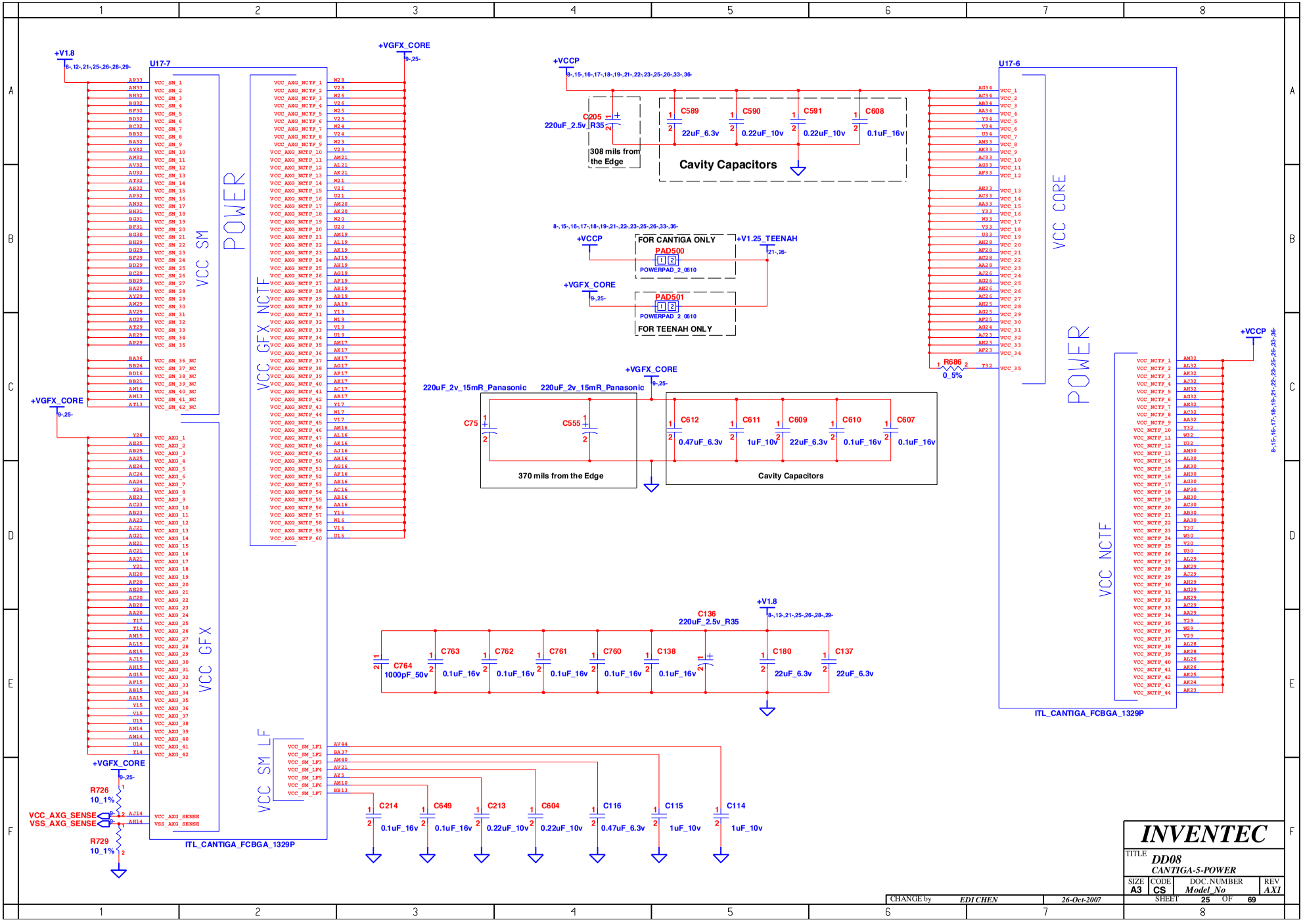

www.VinaFix.vn

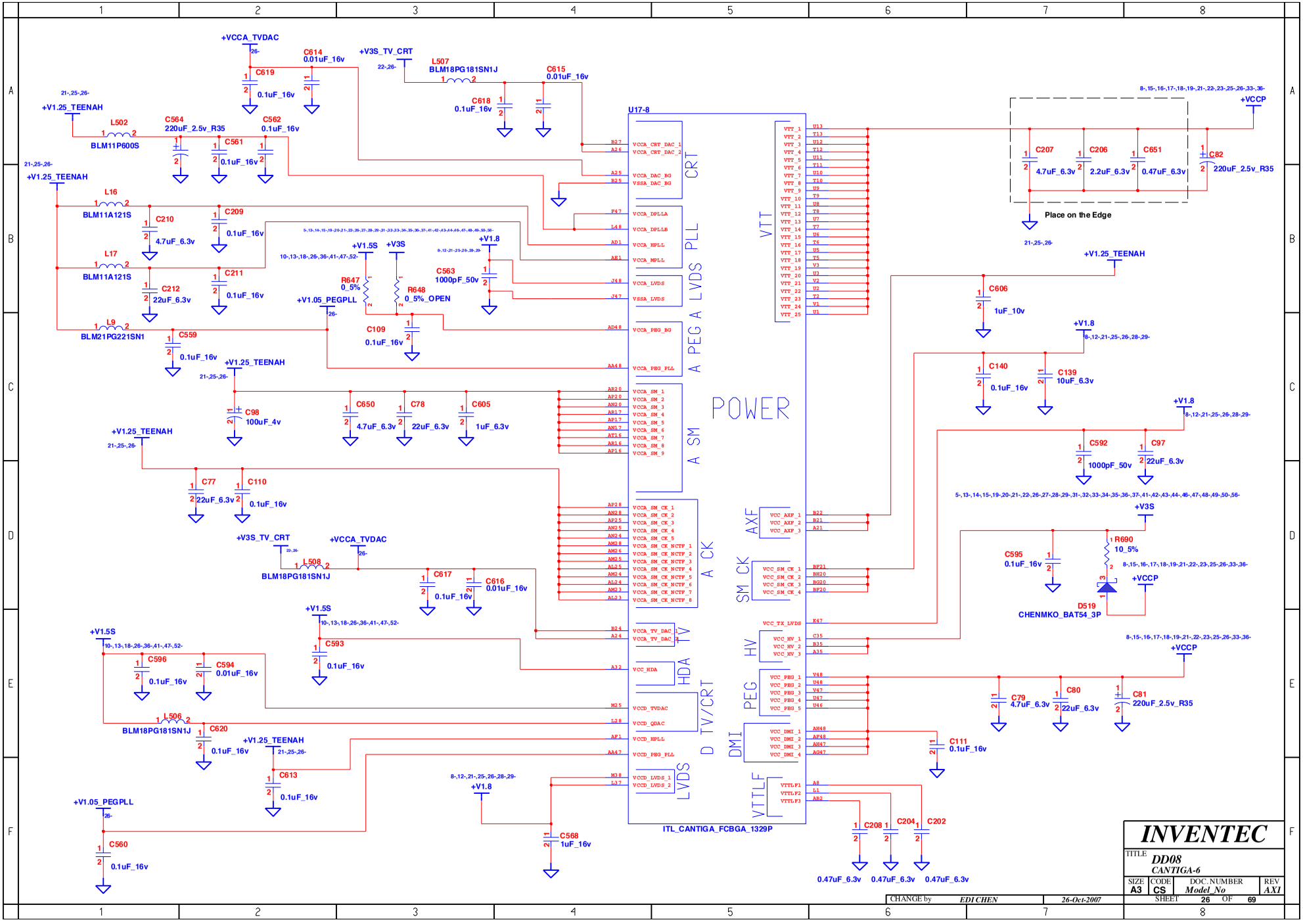

www.VinaFix.vn

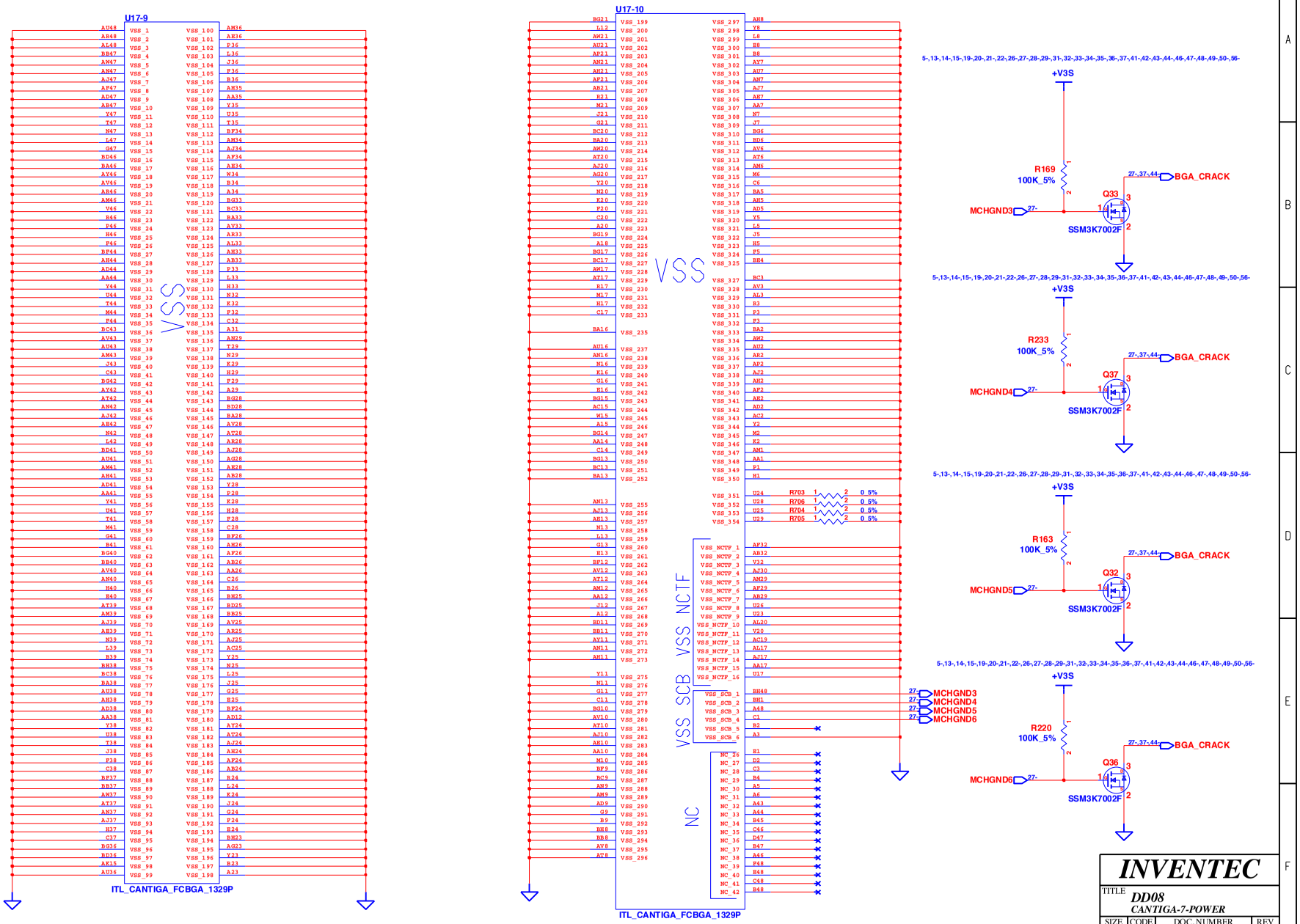

CHANGE by	EDI CHEN	26-Oct-2007

INVENTEC

TITLE: DD08 CANTIGA-7-POWER

SIZE	CODE	DOC. NUMBER	REV
A3	CS	Model_No	AX1

SHEET 27 OF 69

www.VinaFix.vn

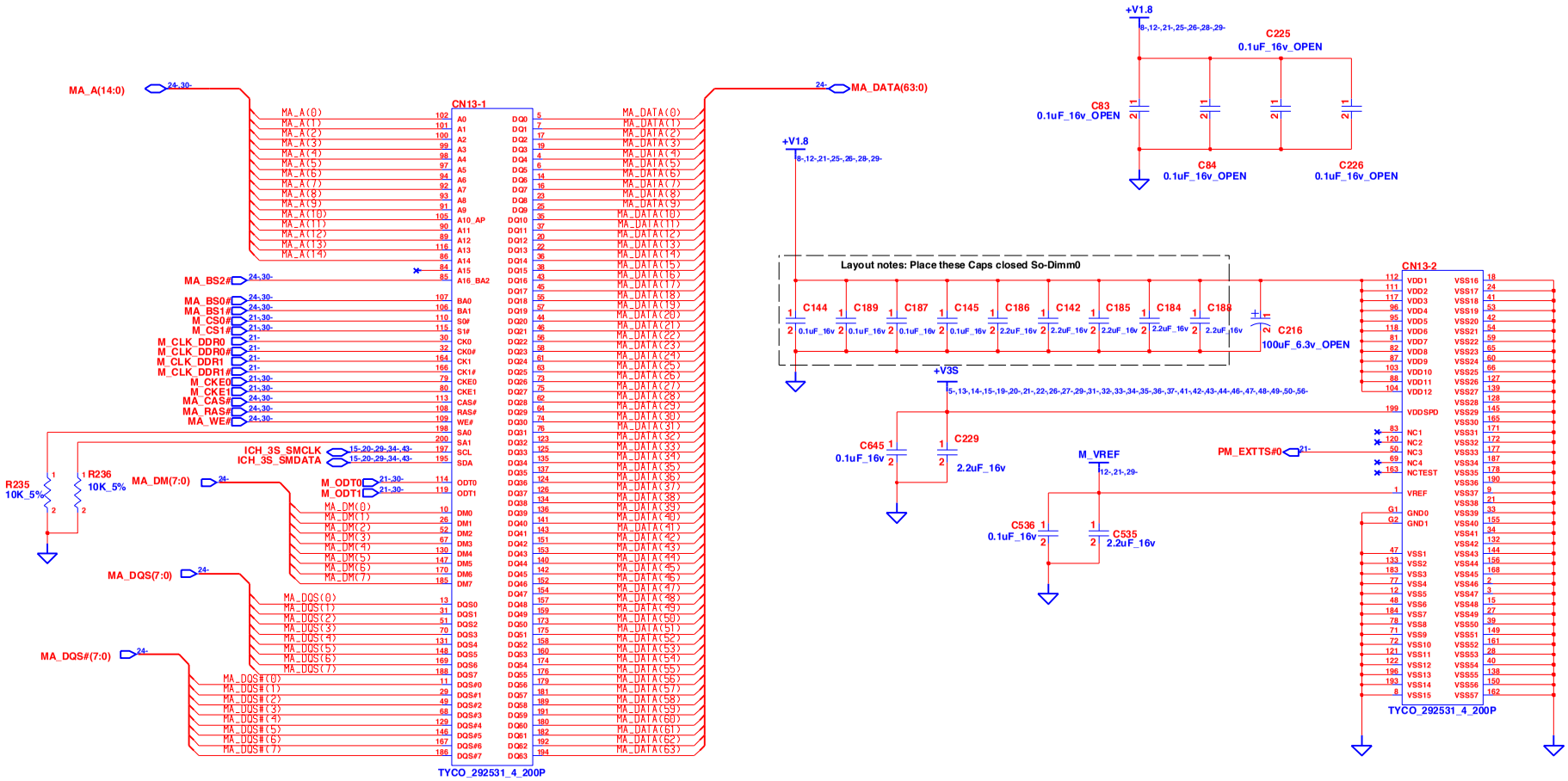

SO DIMM0_9.2mm

TOP SLOT

INVENTEC			
TITLE	DD08 DDR2-DIMM-0		
SIZE A3	CODE CS	DOC.NUMBER Model_No	REV AX1
CHANGE by EDI CHEN	26-Oct-2007	SHEET 28 OF 69	

www.VinaFix.vn

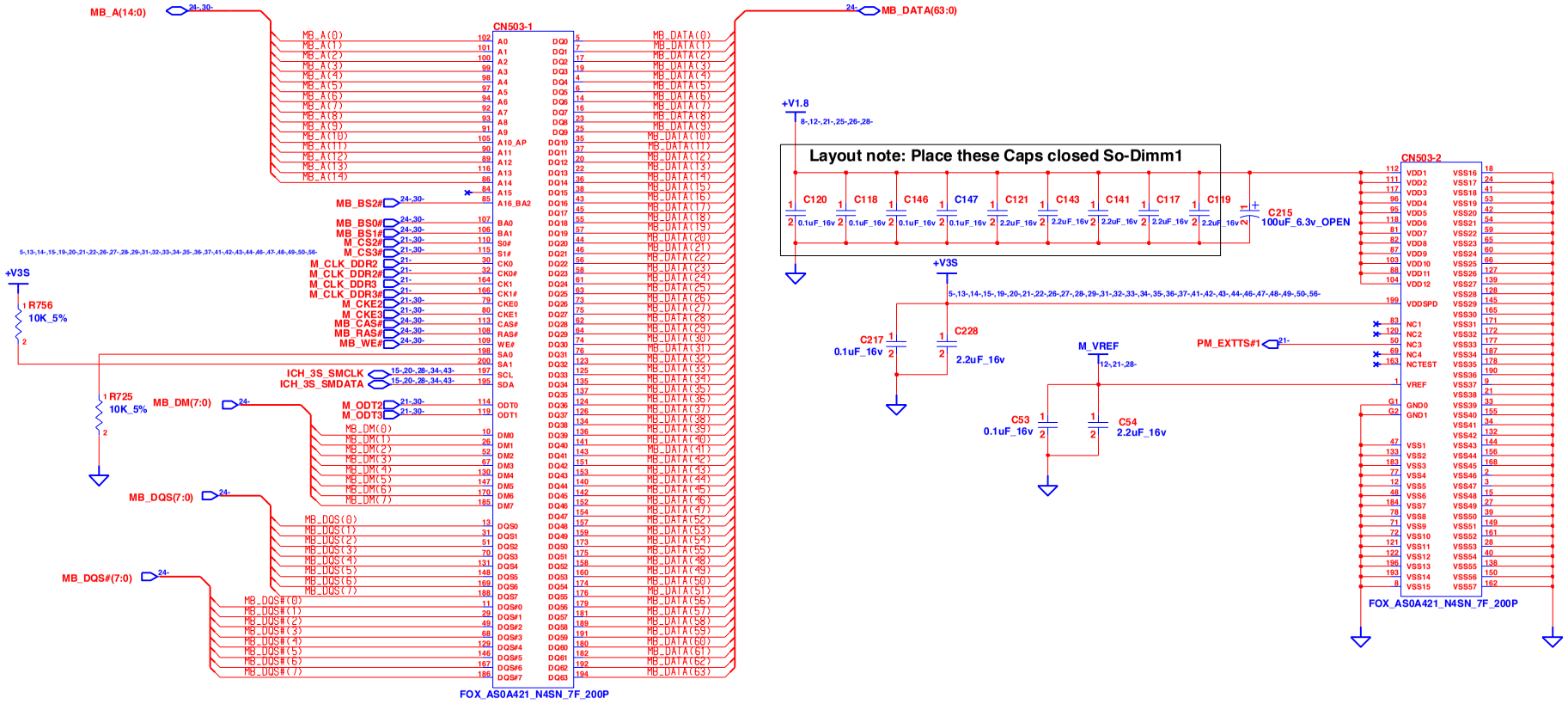

SO DIMM1 4.0mm

BOTTOM SLOT

INVENTEC			
TITLE	DD08 DDR2-DIMM1		
SIZE A3	CODE CS	DOC.NUMBER Model_No	REV AX1
CHANGE by EDI CHEN	26-Oct-2007	SHEET 29 OF 69	

www.VinaFix.vn

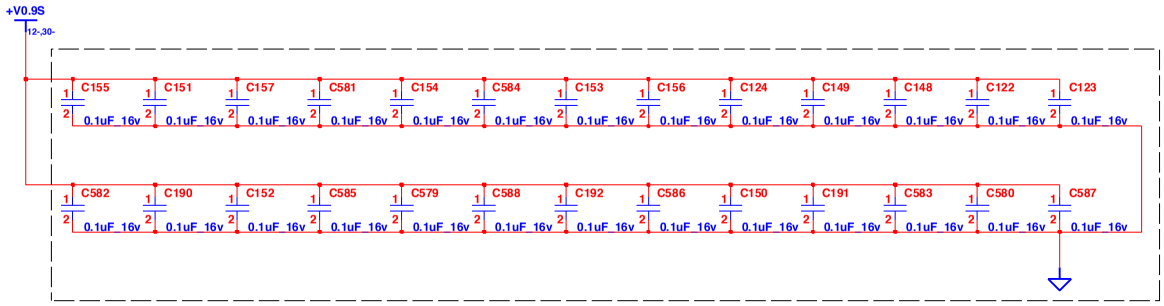

LAYOUT NOTES : PLACE ONE CAP CLOSE TO EVERY 2 PULL UP RESISTOR TERMINATED TO +V0.9S

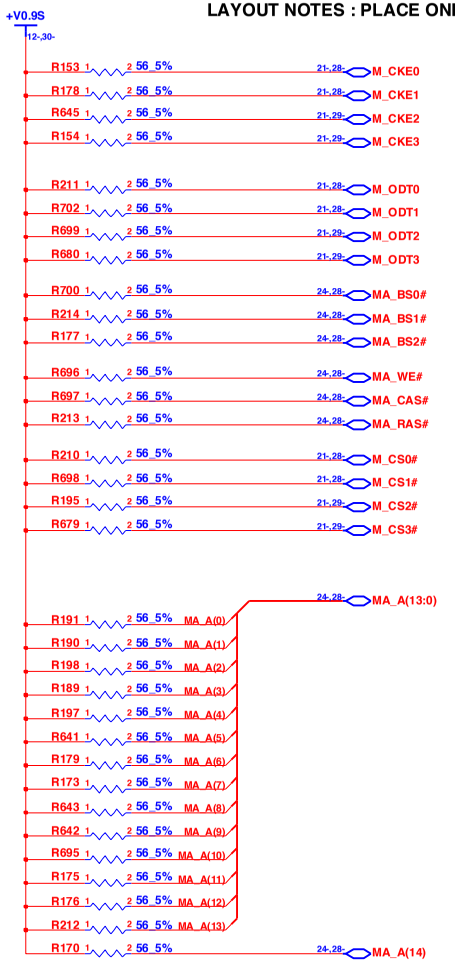

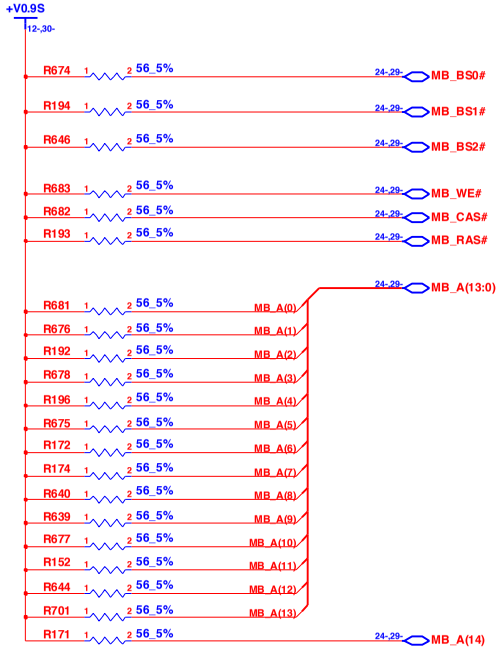

CHANGE by	EDI CHEN	27-Sep-2003	

INVENTEC

TITLE **DD08**
DDR2-DAMPING

SIZE	CODE	DOC.NUMBER	REV
A3	CS	Model_No	AX1

SHEET 30 OF 69

www.VinaFix.vn

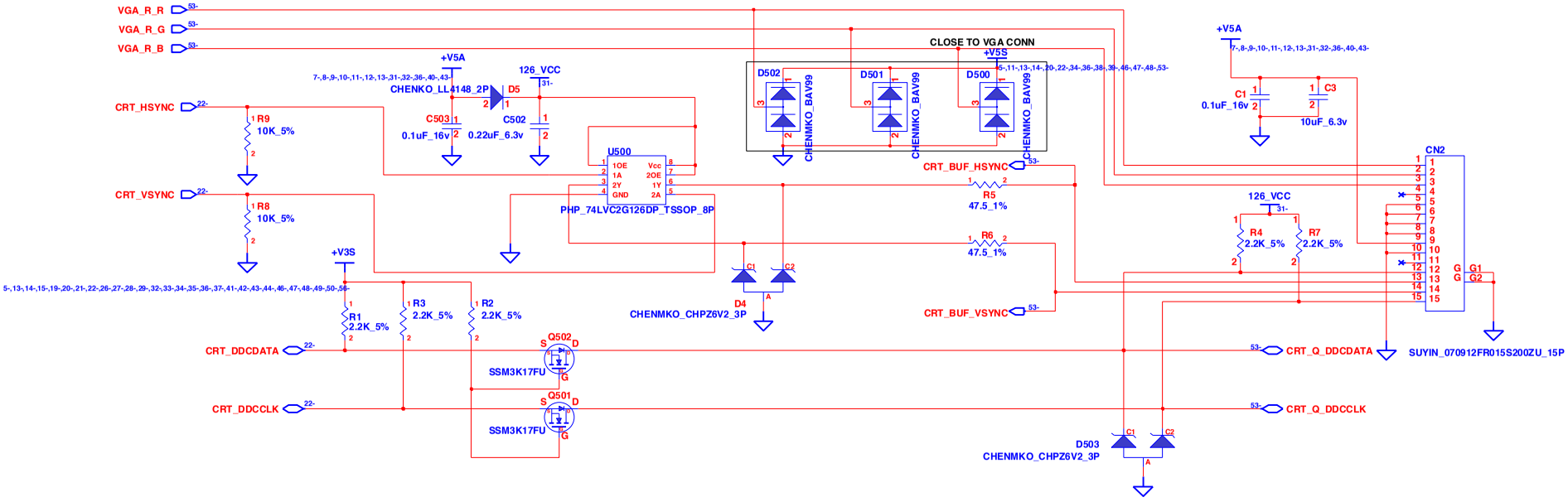

INVENTEC			
TITLE DD08 CRT& SVIDEO CONN			
SIZE A3	CODE CS	DOC.NUMBER Model_No	REV AX1
		SHEET 31 OF 69	

CHANGE by EDI CHEN 26-Oct-2007

www.VinaFix.vn

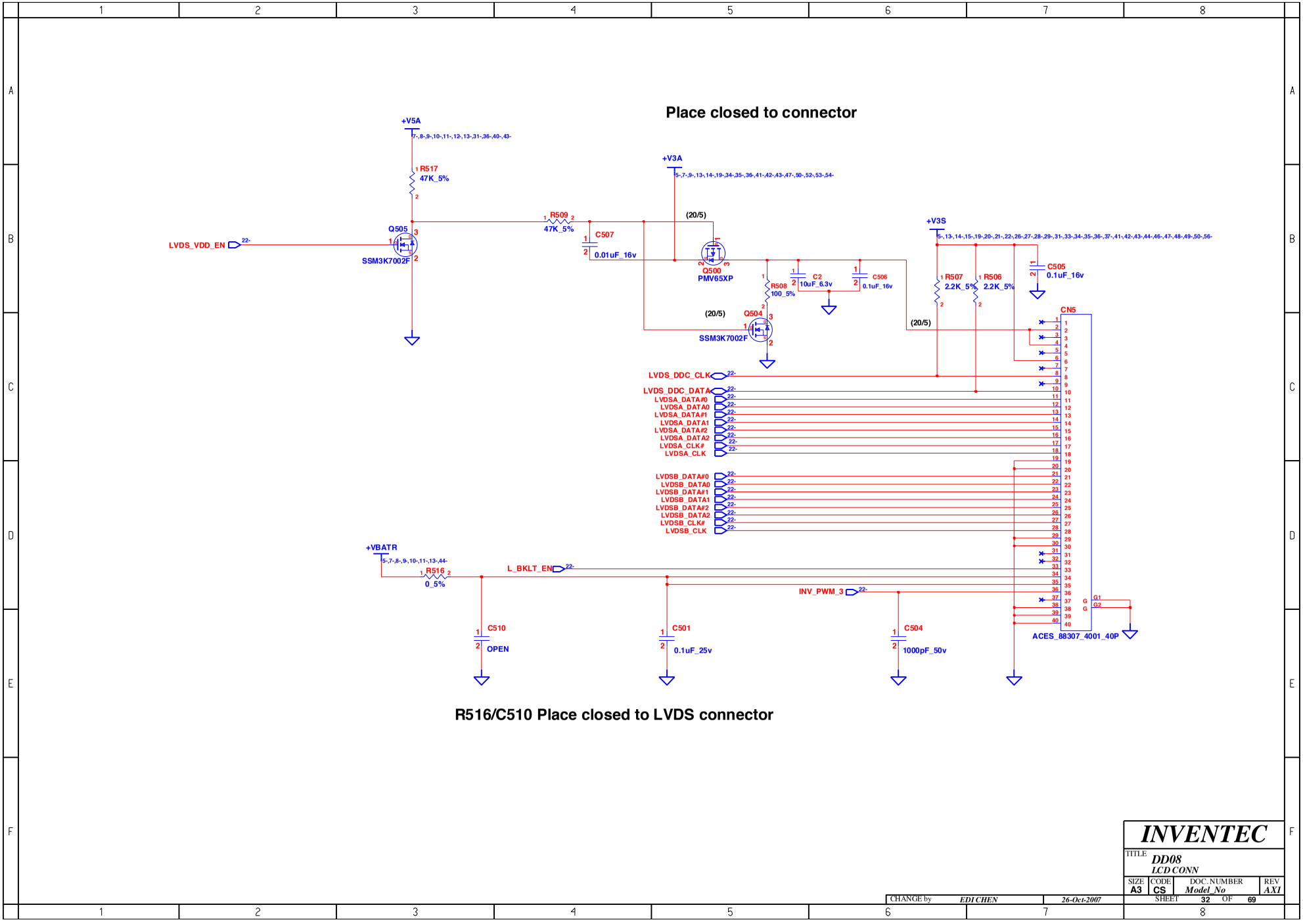

INVENTEC			
TITLE DD08 LCD CONN			
SIZE A3	CODE CS	DOC. NUMBER Model_No	REV AXI
CHANGE by EDI CHEN	26-Oct-2007	SHEET 32 OF 69	

www.VinaFix.vn

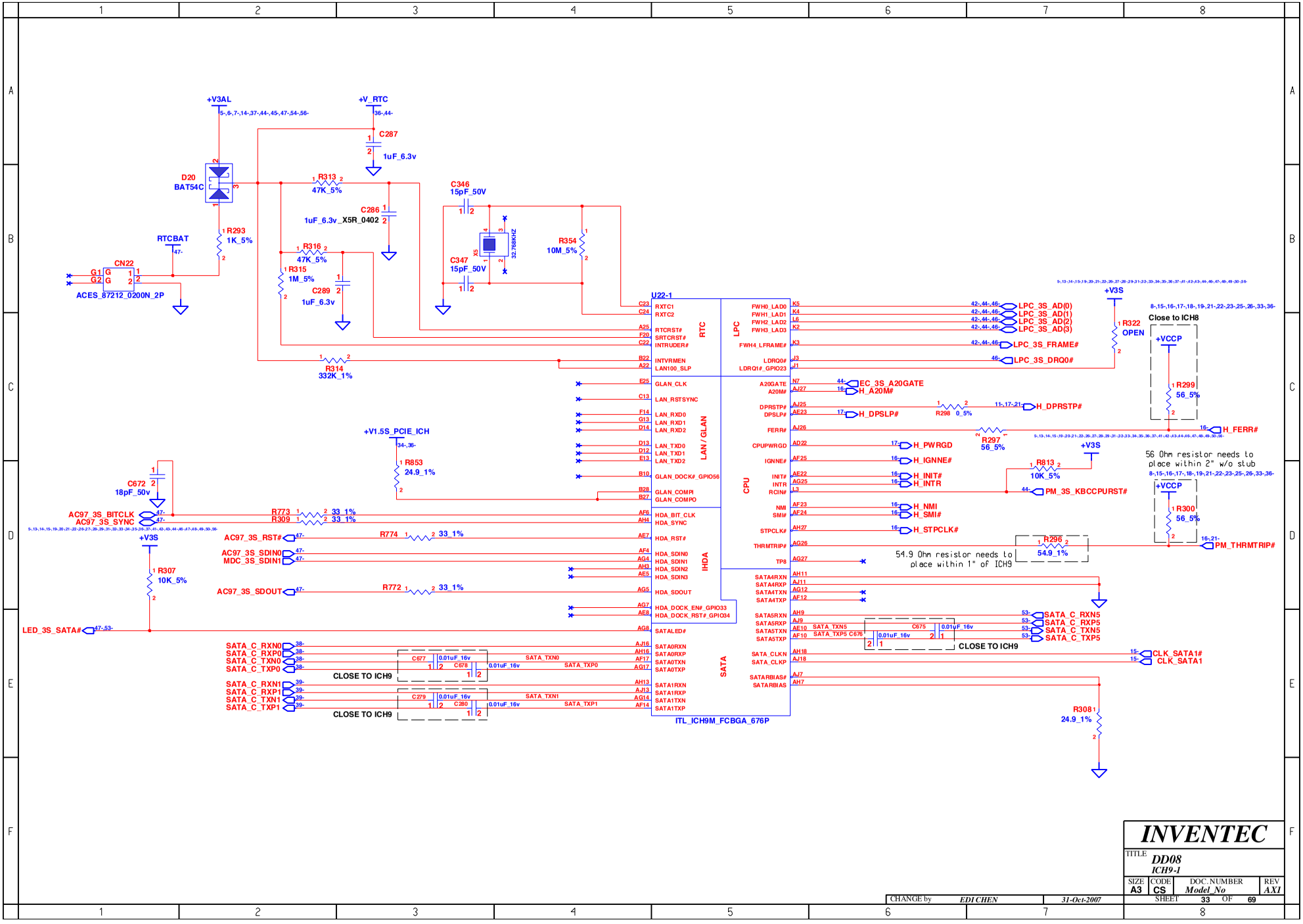

INVENTEC			
TITLE DD08 ICH9-1			
SIZE A3	CODE CS	DOC. NUMBER Model_No	REV AX1
		SHEET 33 OF 69	
CHANGE by EDI CHEN	31-Oct-2007		

www.VinaFix.vn

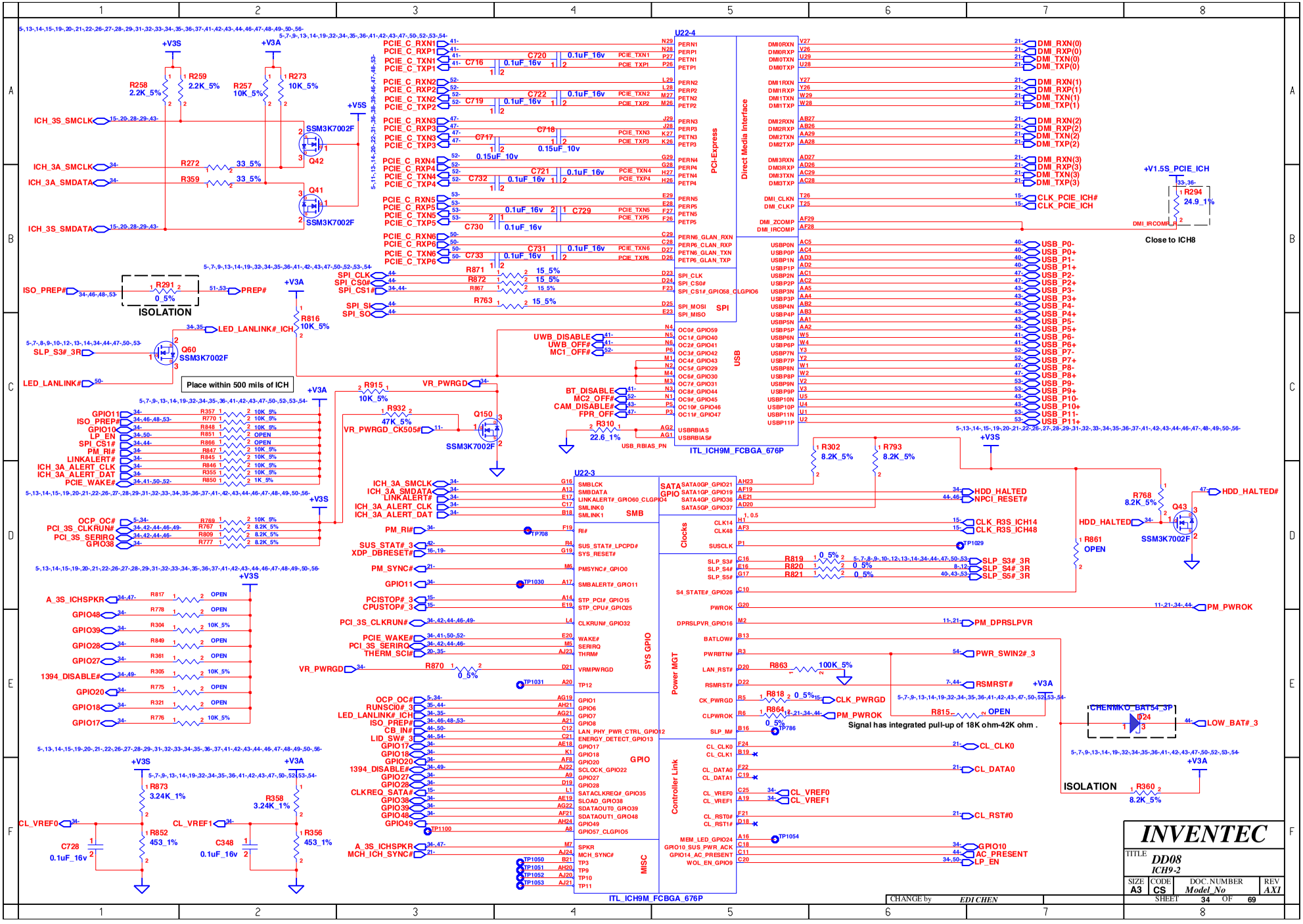

www.VinaFix.vn

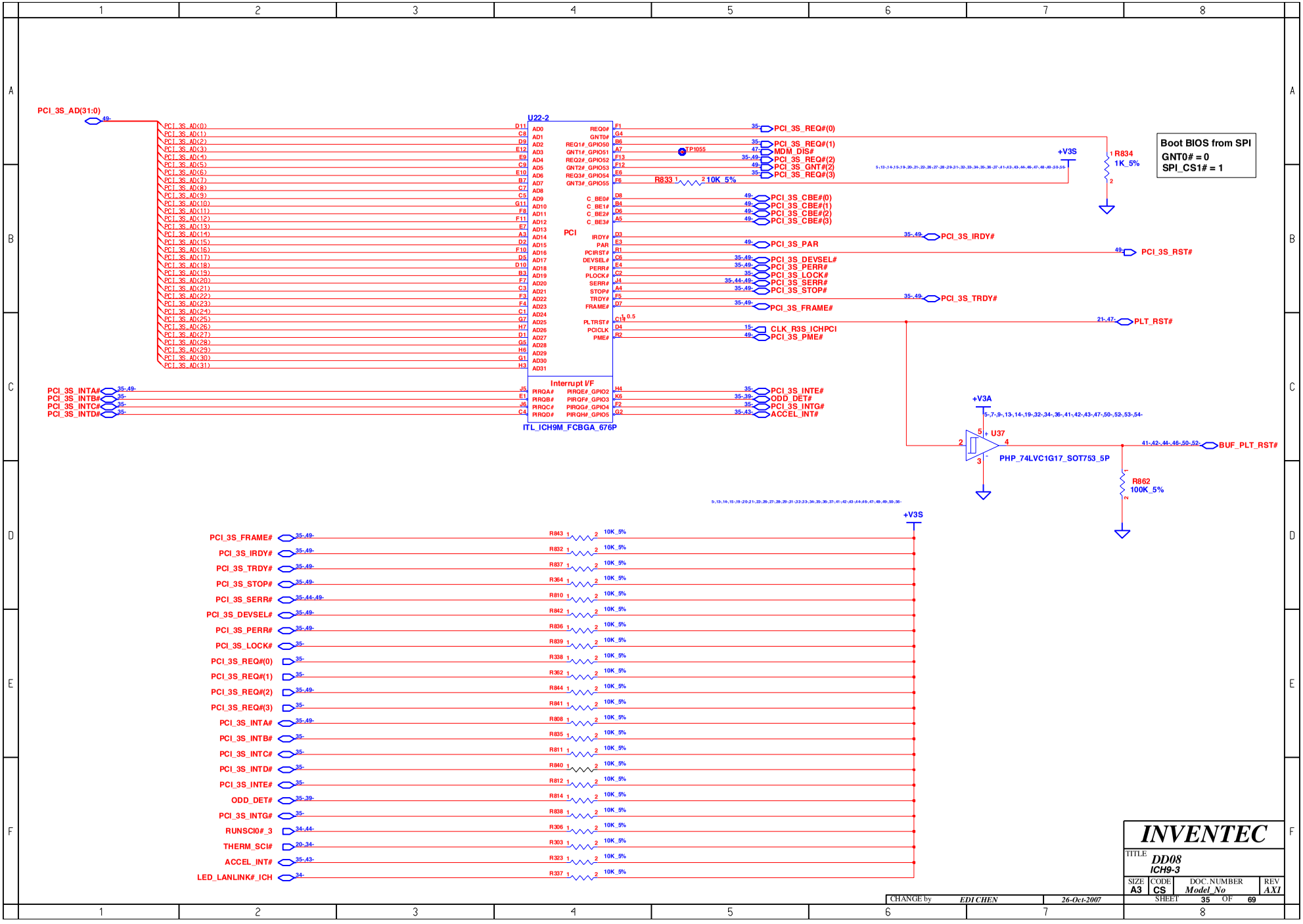

www.VinaFix.vn

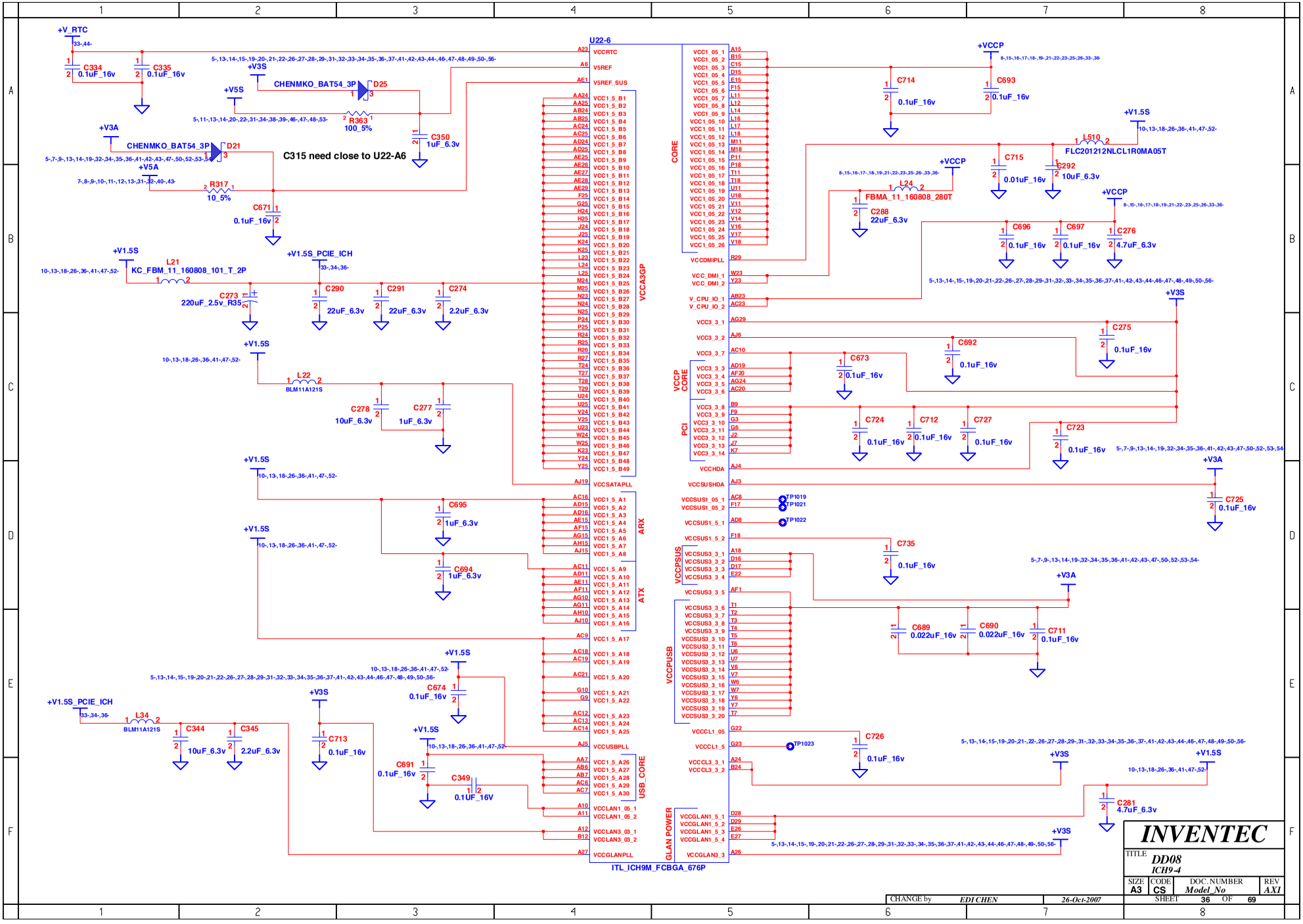

www.VinaFix.vn

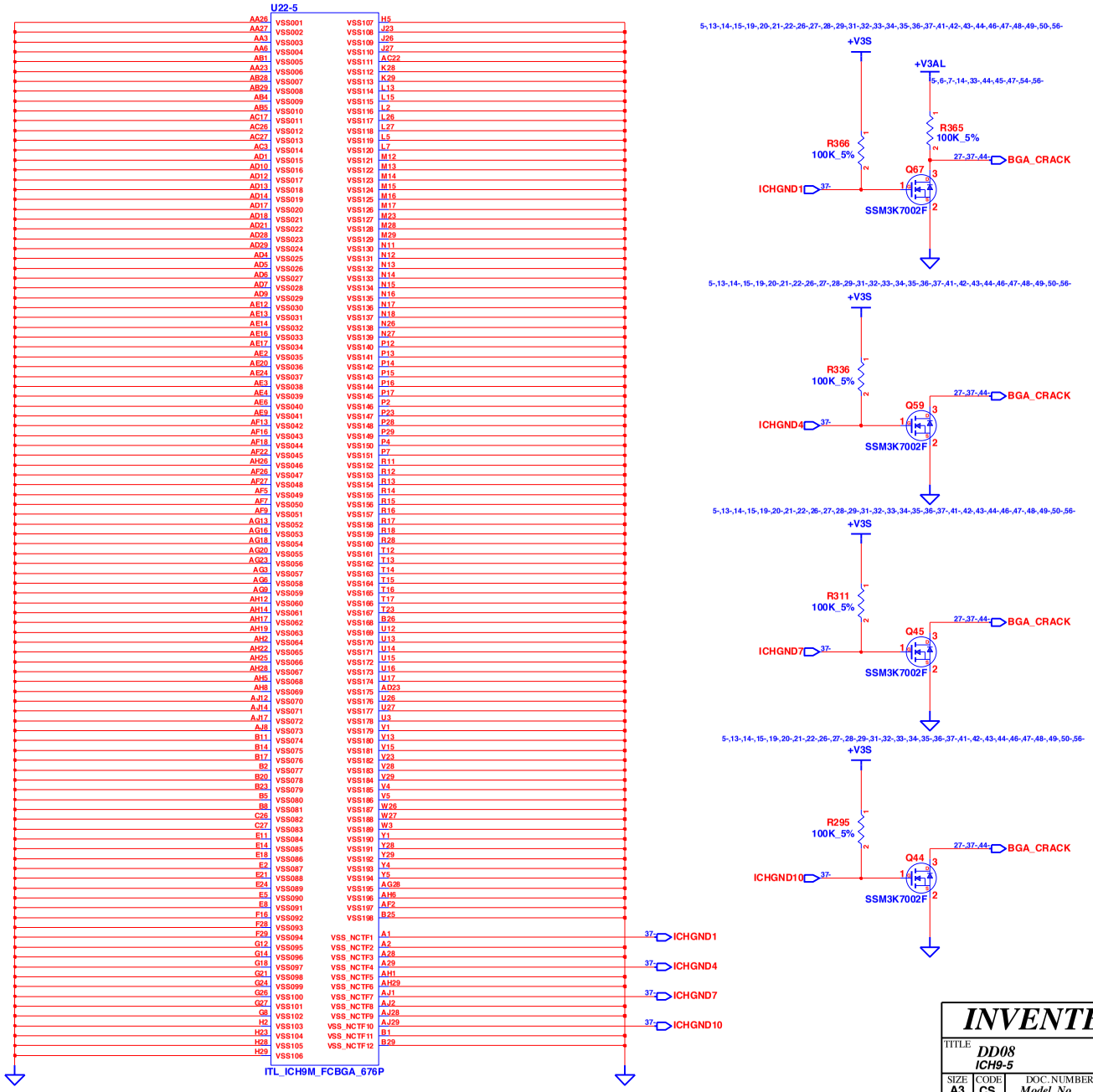

INVENTEC			
TITLE DD08 ICH9-5			
SIZE A3	CODE CS	DOC.NUMBER Model_No	REV AXI
CHANGE by EDI CHEN	26-Oct-2007	SHEET 37 OF 69	

www.VinaFix.vn

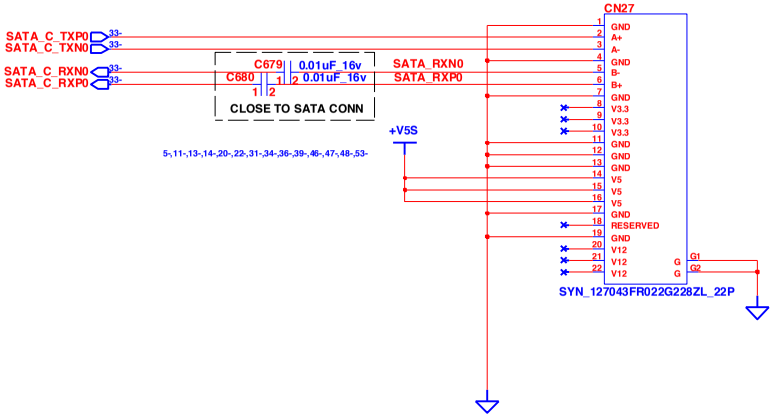

CHANGE by	EDI CHEN	26-Oct-2007	

INVENTEC

TITLE *DD08*
HDD CONN

SIZE	CODE	DOC. NUMBER	REV
A3	CS	*Model_No*	*AXI*

SHEET 38 OF 69

www.VinaFix.vn

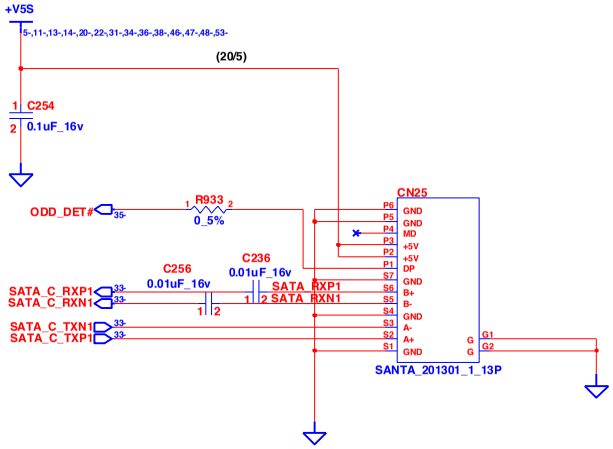

SATA ODD

CHANGE by	EDI CHEN	26-Oct-2007	

INVENTEC

TITLE *DD08*
ODD CONN

SIZE	CODE	DOC. NUMBER	REV
A3	CS	*Model_No*	*AXI*

SHEET 39 OF 69

www.VinaFix.vn

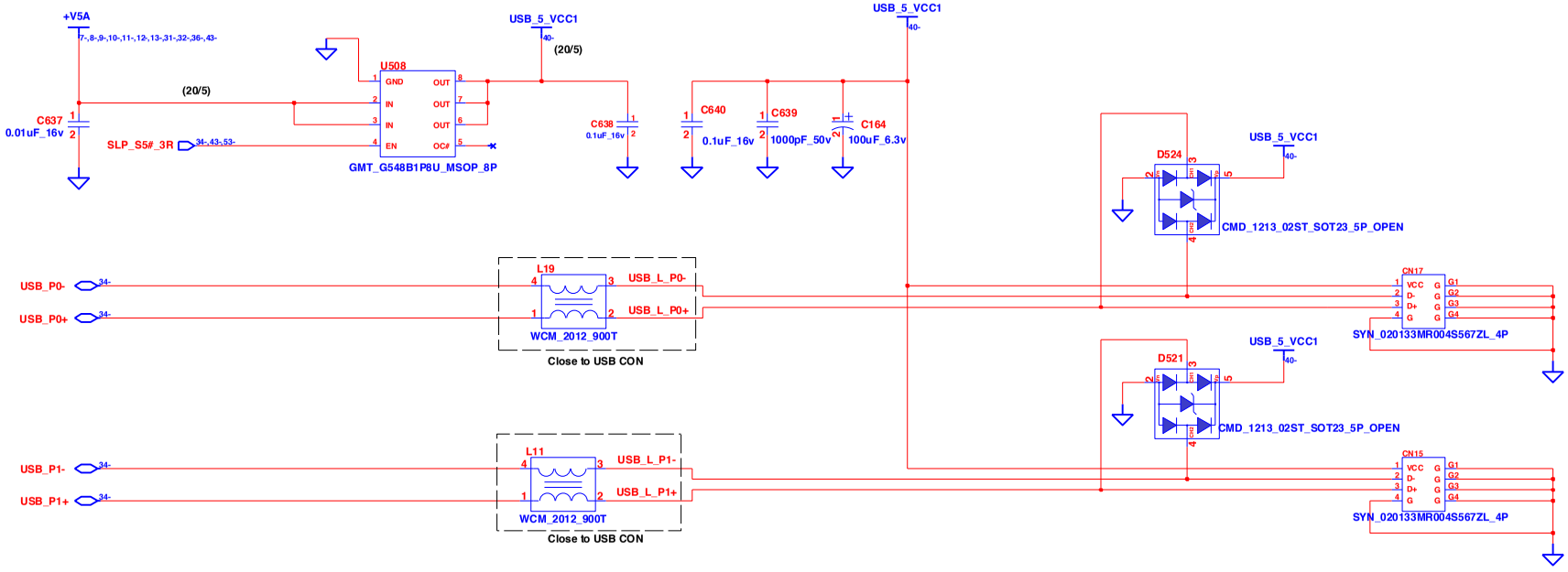

INVENTEC			
TITLE DD08 USB CONN/USB(DB)			
SIZE A3	CODE CS	DOC.NUMBER Model_No	REV AXI
CHANGE by EDI CHEN	26-Oct-2007	SHEET 40 OF 69	

www.VinaFix.vn

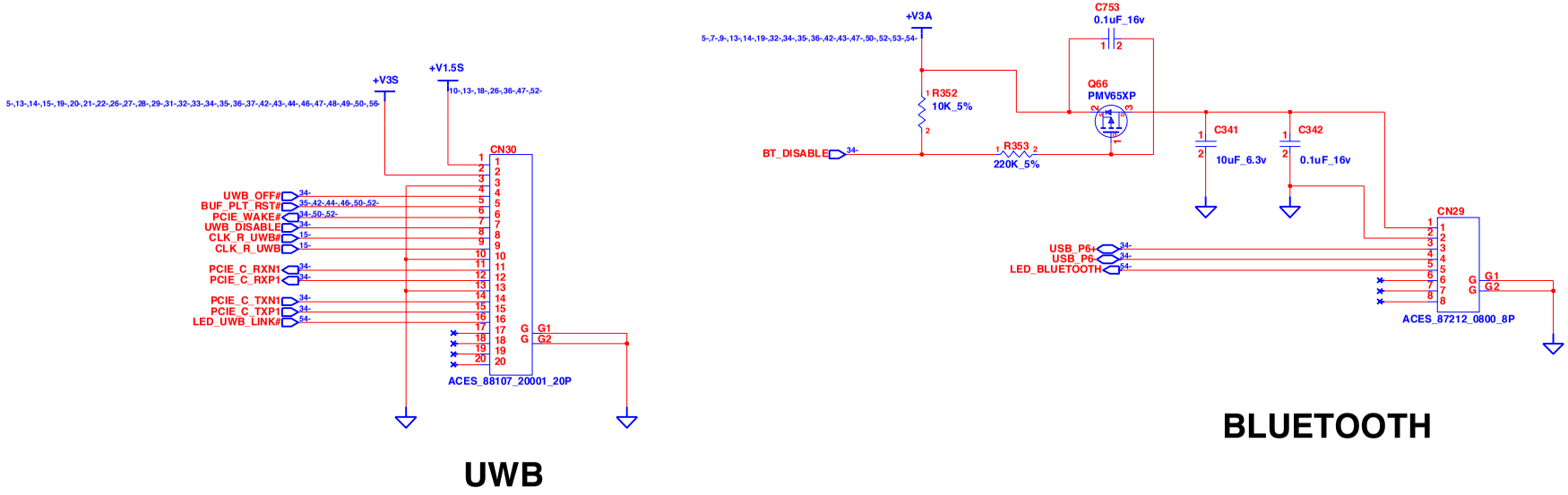

UWB

BLUETOOTH

CHANGE by	EDI CHEN	26-Oct-2007	

INVENTEC

TITLE: *DD08*
Finger Printer& BlueTooth

SIZE	CODE	DOC. NUMBER	REV
A3	CS	*Model_No*	*AXI*

SHEET 41 OF 69

www.VinaFix.vn

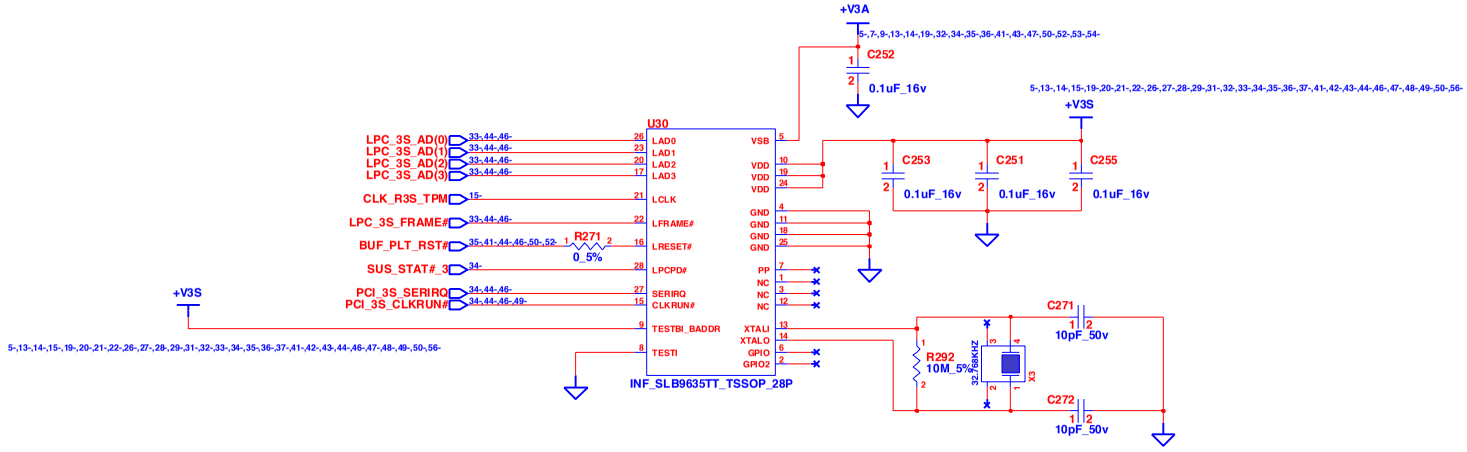

INVENTEC			
TITLE DD08 TPM V1.2			
SIZE A3	CODE CS	DOC. NUMBER Model_No	REV AXI
		SHEET 42 OF 69	

CHANGE by EDI CHEN 31-Oct-2007

www.VinaFix.vn

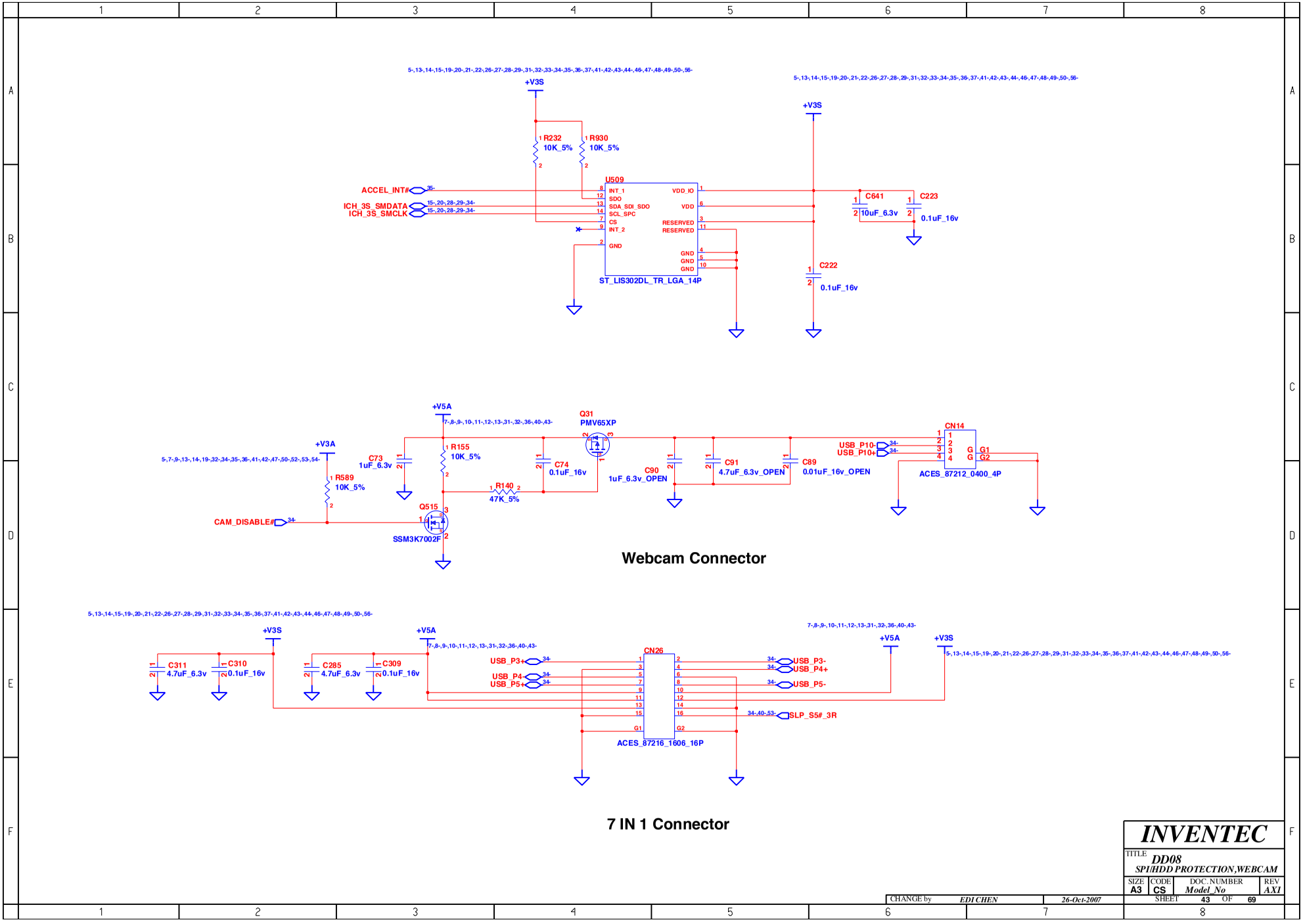

www.VinaFix.vn

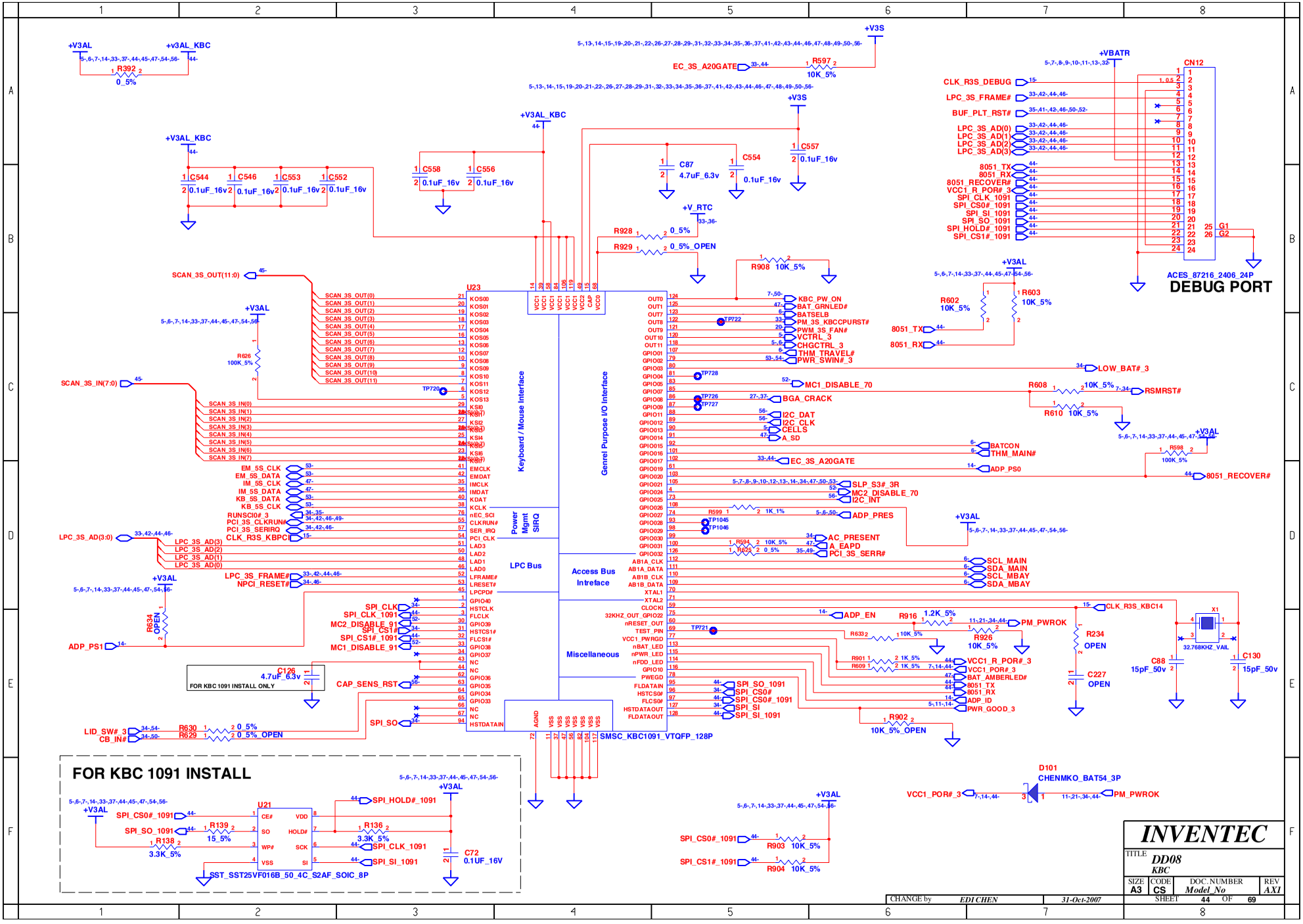

www.VinaFix.vn

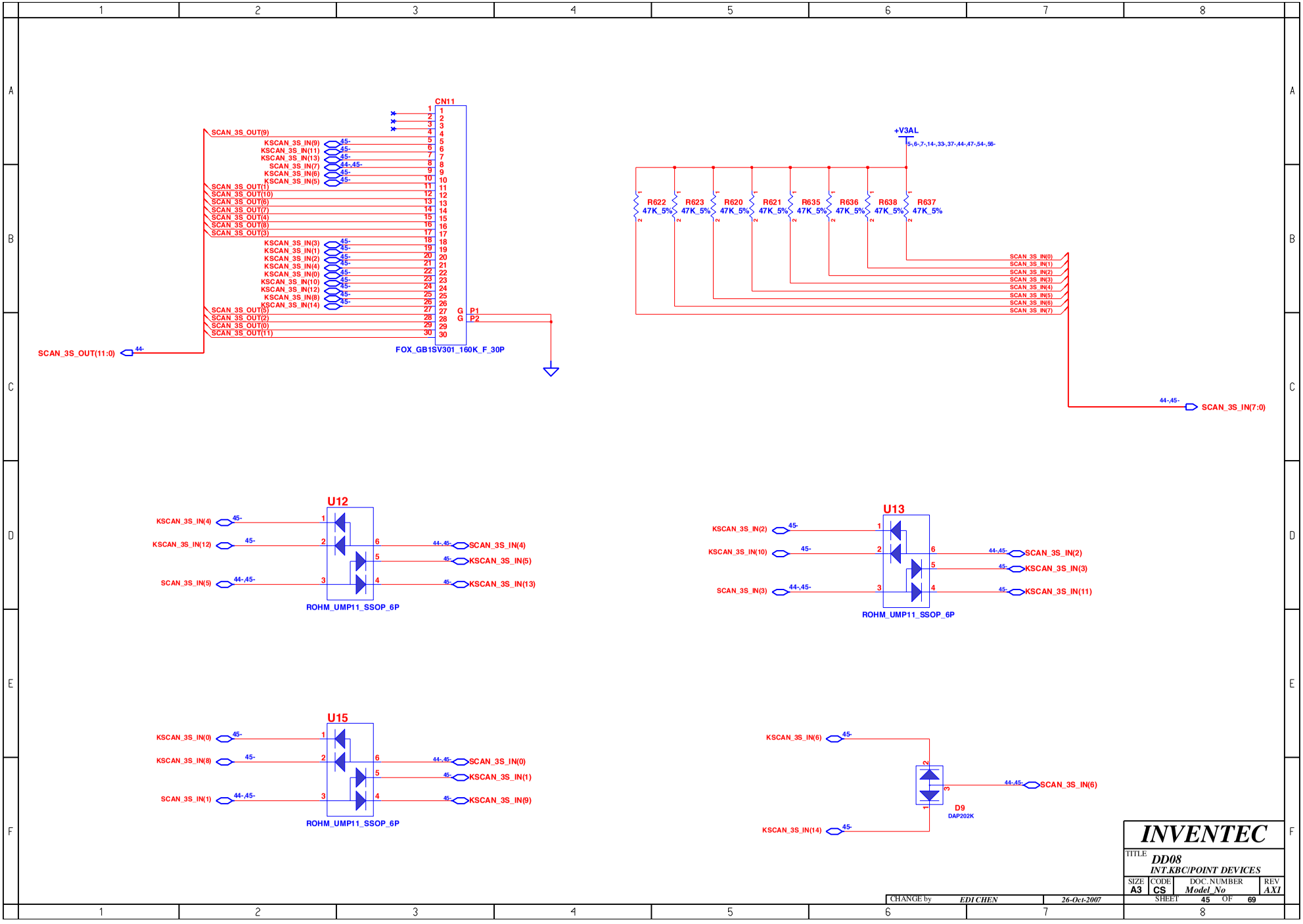

www.VinaFix.vn

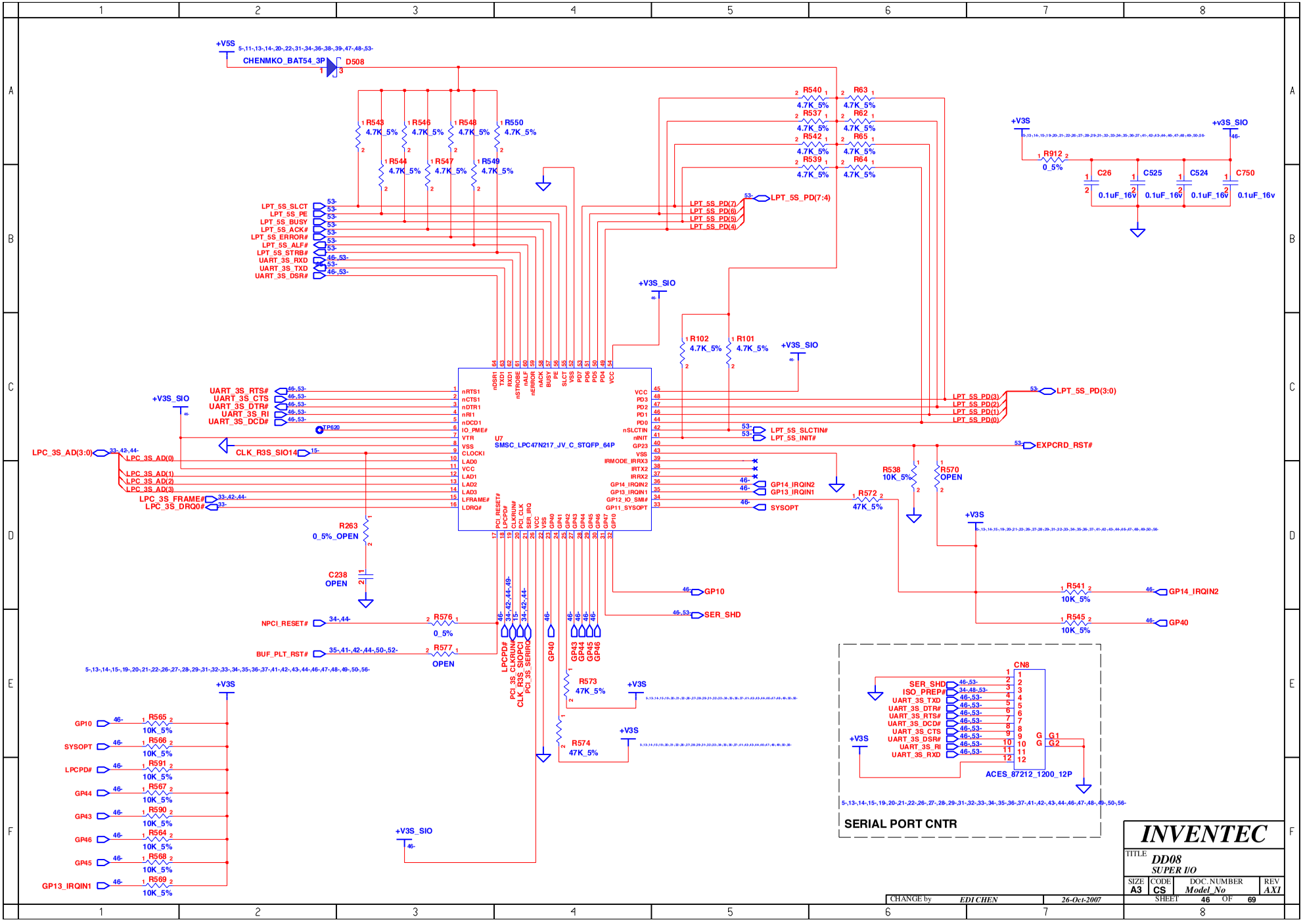

www.VinaFix.vn

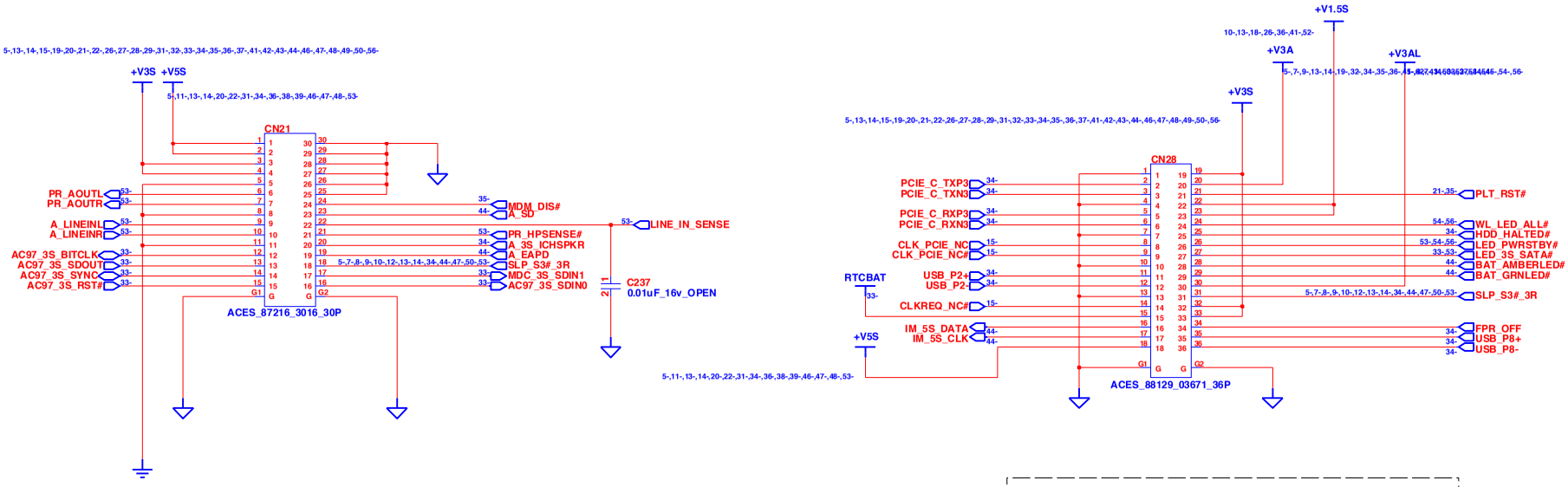

1. +V5S	16. AZ_R3S_SDIN0
2. +V5S	17. MDC_R3S_SDIN1
3. +V3S	18. SLP_S3#_3R
4. +V3S	19. A_EAPD
5. AGND	20. SPKR
6. PR_AOUT_L	21. PR_HPSENSE#
7. PR_AOUT_R	22. LINE_IN_SENSE
8. AGND	23. A_SD
9. PR_LINEIN_L	24. MODEM DISABLE#
10. PR_LINEIN_R	25. DGND
11. AGND	36. DGND
12. AZ_R3S_BITCLK	37. DGND
13. AZ_R3S_SDOUT	28. DGND
14. AZ_R3S_SYNC	29. DGND
15. AZ_R3S_RST#	30. DGND

1	GND	19	+V3S
2	PCIE_C_TXP	20	+V3A
3	PCIE_C_TXN	21	PLT_RST#
4	GND	22	+V1.5S
5	PCIE_C_RXP	23	+V1.5S
6	PCIE_C_RXN	24	WL_LED_ALL#
7	GND	25	ACC_LED#
8	CLK_R_PCIE_NEWCARD	26	STBY_LED#
9	CLK_R_PCIE_NEWCARD#	27	LED_3S_SATA#
10	GND	28	BAT_AMBERLED#
11	USB_P+	29	BAT_GRNLED#
12	USB_P-	30	GND
13	GND	31	SLP_3S#_3R
14	CLK_R_REQ#	32	+V3S
15	RTCBAT	33	+V3S
16	TOUCHPAD DATA	34	FPR_OFF
17	TOUCHPAD CLK	35	USB_P8+
18	+V5S	36	USB_P8-

BOARD TO BOARD CONN FOR EXPRESSCARD, MDC, AUDIO, LED.

CHANGE by	EDI CHEN	26-Oct-2007	

INVENTEC

TITLE DD08
DAUGHTER BOARD CONN

SIZE	CODE	DOC. NUMBER	REV
A3	CS	Model_No	AX1

SHEET 47 OF 69

www.VinaFix.vn

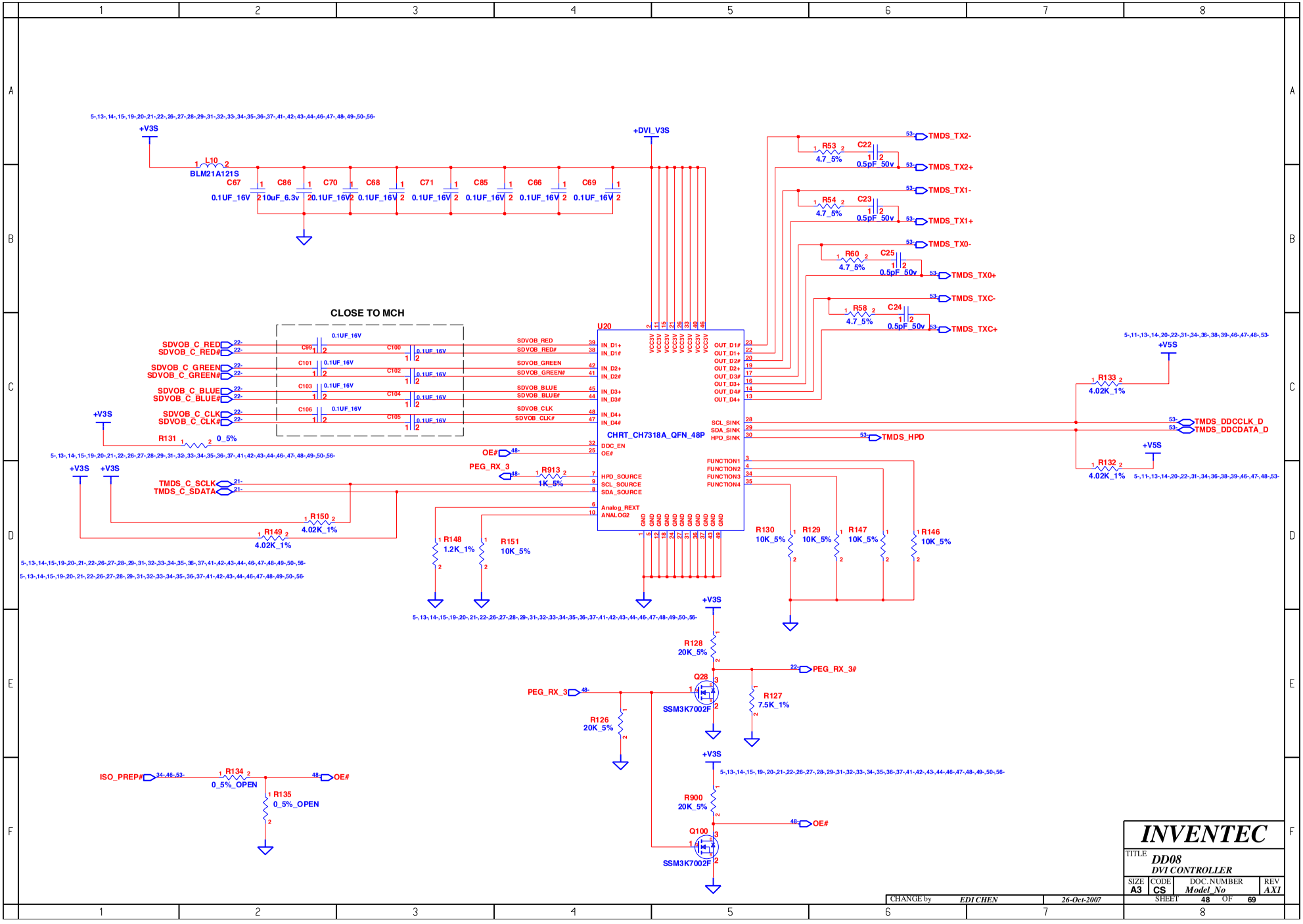

www.VinaFix.vn

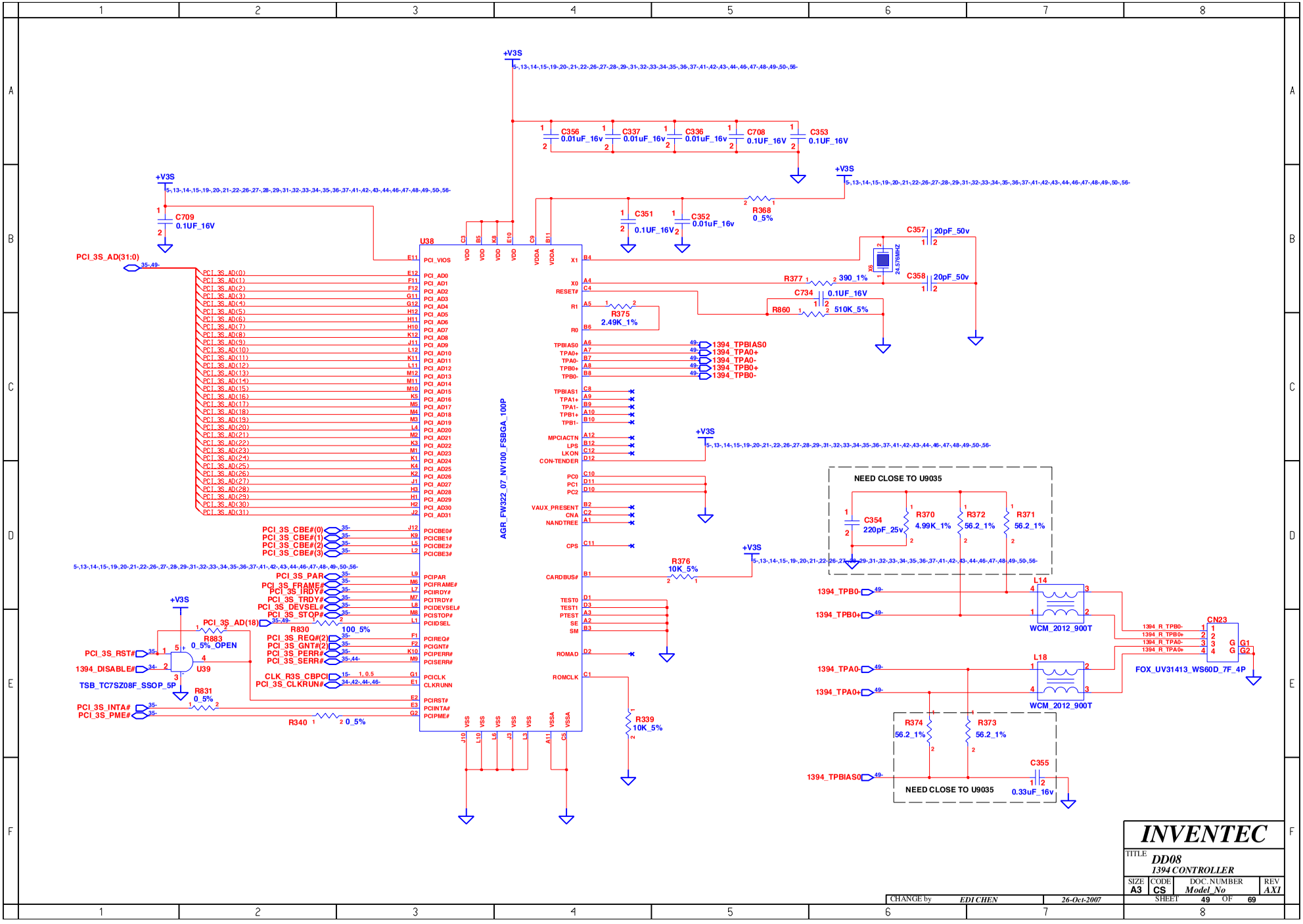

CHANGE by	EDI CHEN	26-Oct-2007	

INVENTEC

TITLE: DD08 — 1394 CONTROLLER

SIZE	CODE	DOC. NUMBER	REV
A3	CS	Model_No	AX1

SHEET 49 OF 69

www.VinaFix.vn

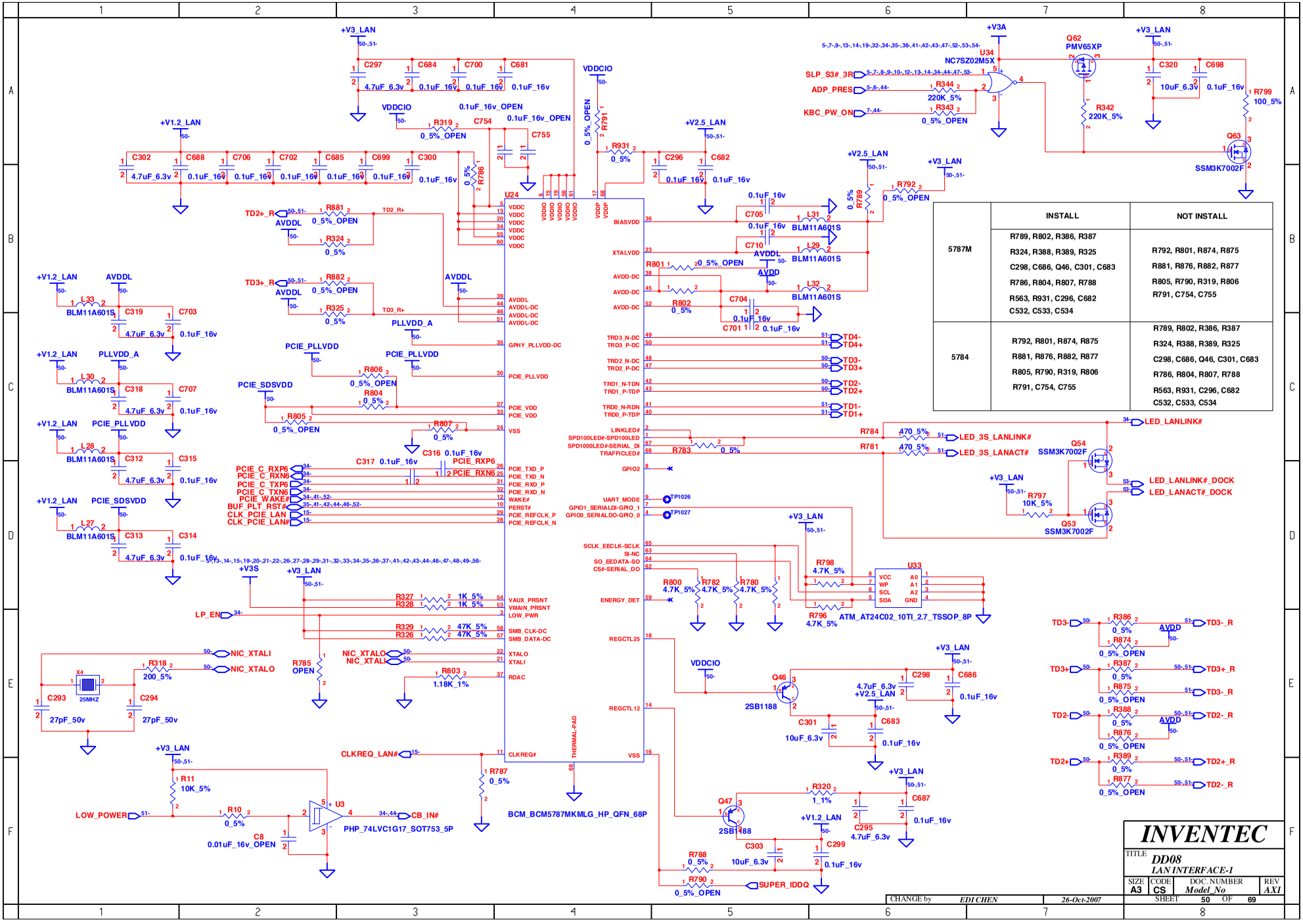

	INSTALL	NOT INSTALL
5787M	R789, R802, R386, R387 R324, R388, R389, R325 C298, C686, Q46, C301, C683 R786, R804, R807, R788 R563, R931, C296, C682 C532, C533, C534	R792, R801, R874, R875 R881, R876, R882, R877 R805, R790, R319, R806 R791, C754, C755
5784	R792, R801, R874, R875 R881, R876, R882, R877 R805, R790, R319, R806 R791, C754, C755	R789, R802, R386, R387 R324, R388, R389, R325 C298, C686, Q46, C301, C683 R786, R804, R807, R788 R563, R931, C296, C682 C532, C533, C534

www.VinaFix.vn

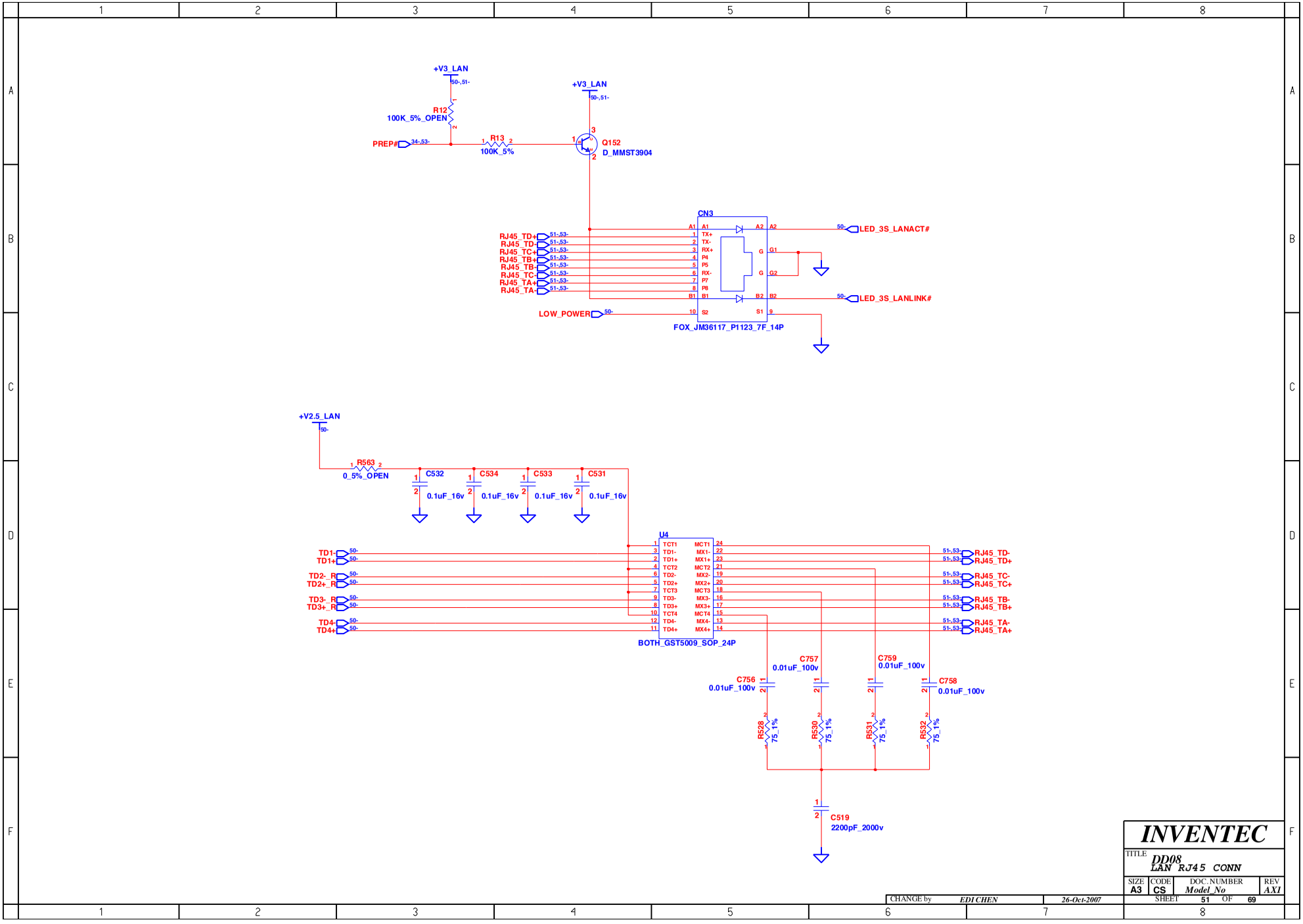

www.VinaFix.vn

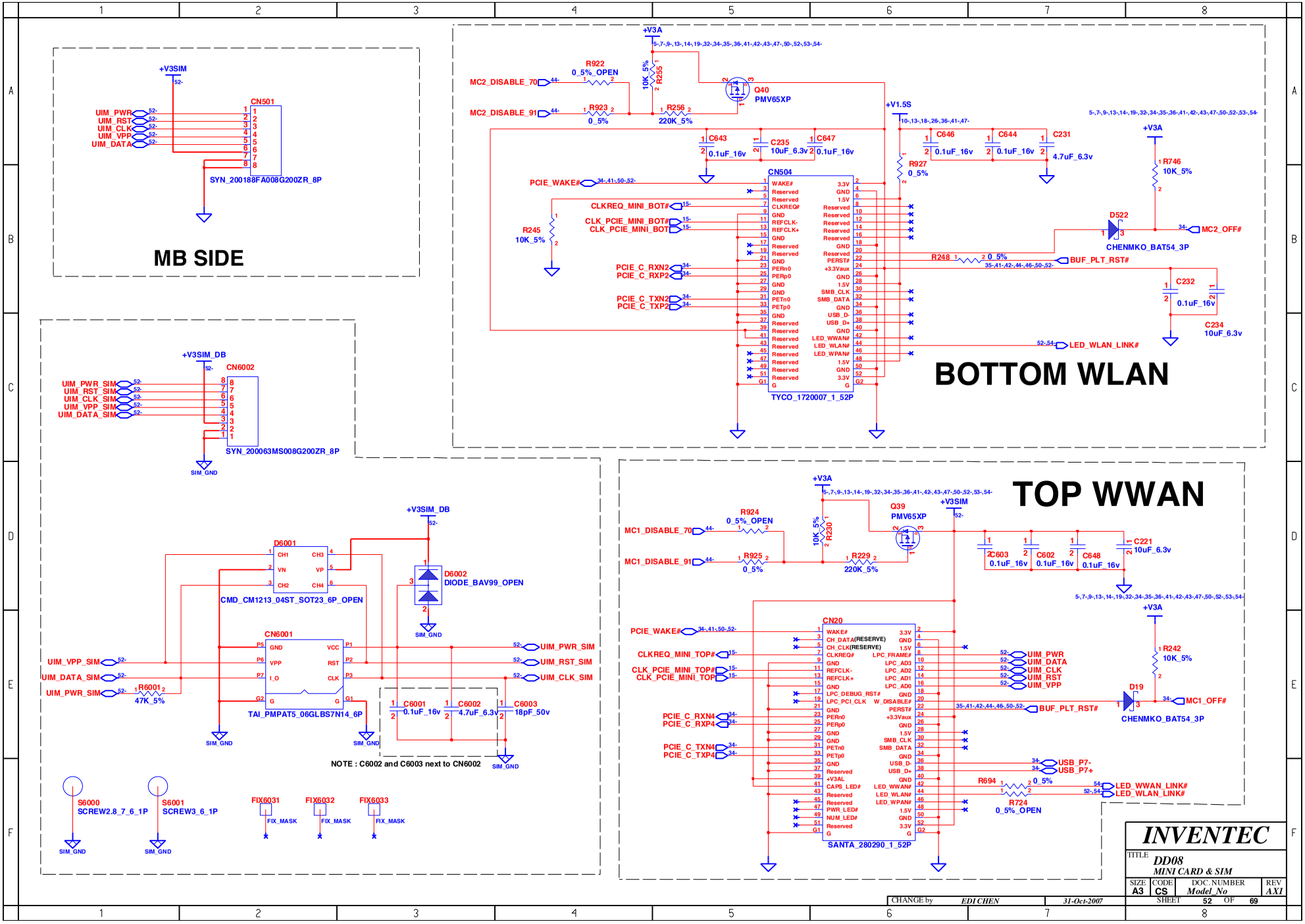

www.VinaFix.vn

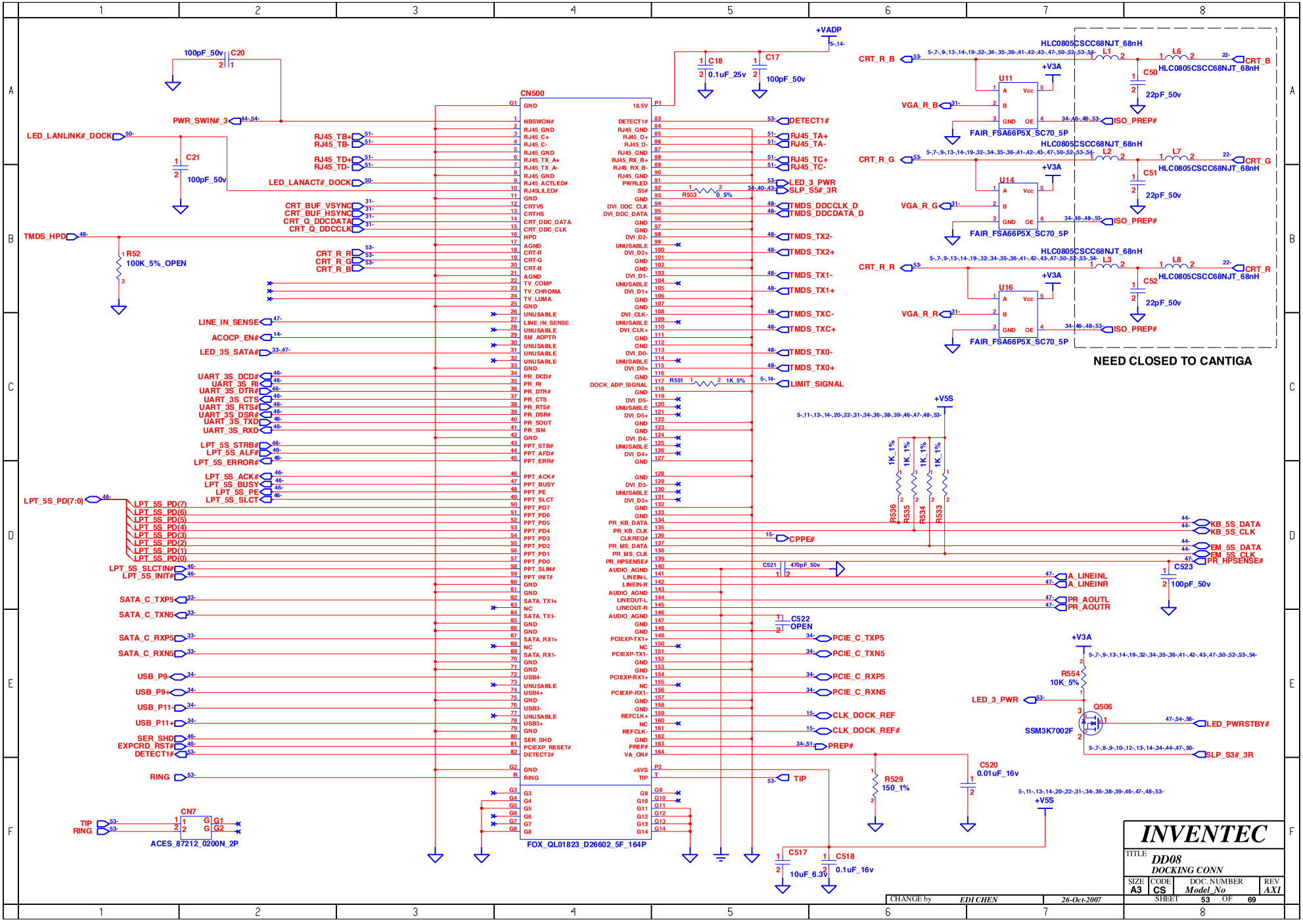

www.VinaFix.vn

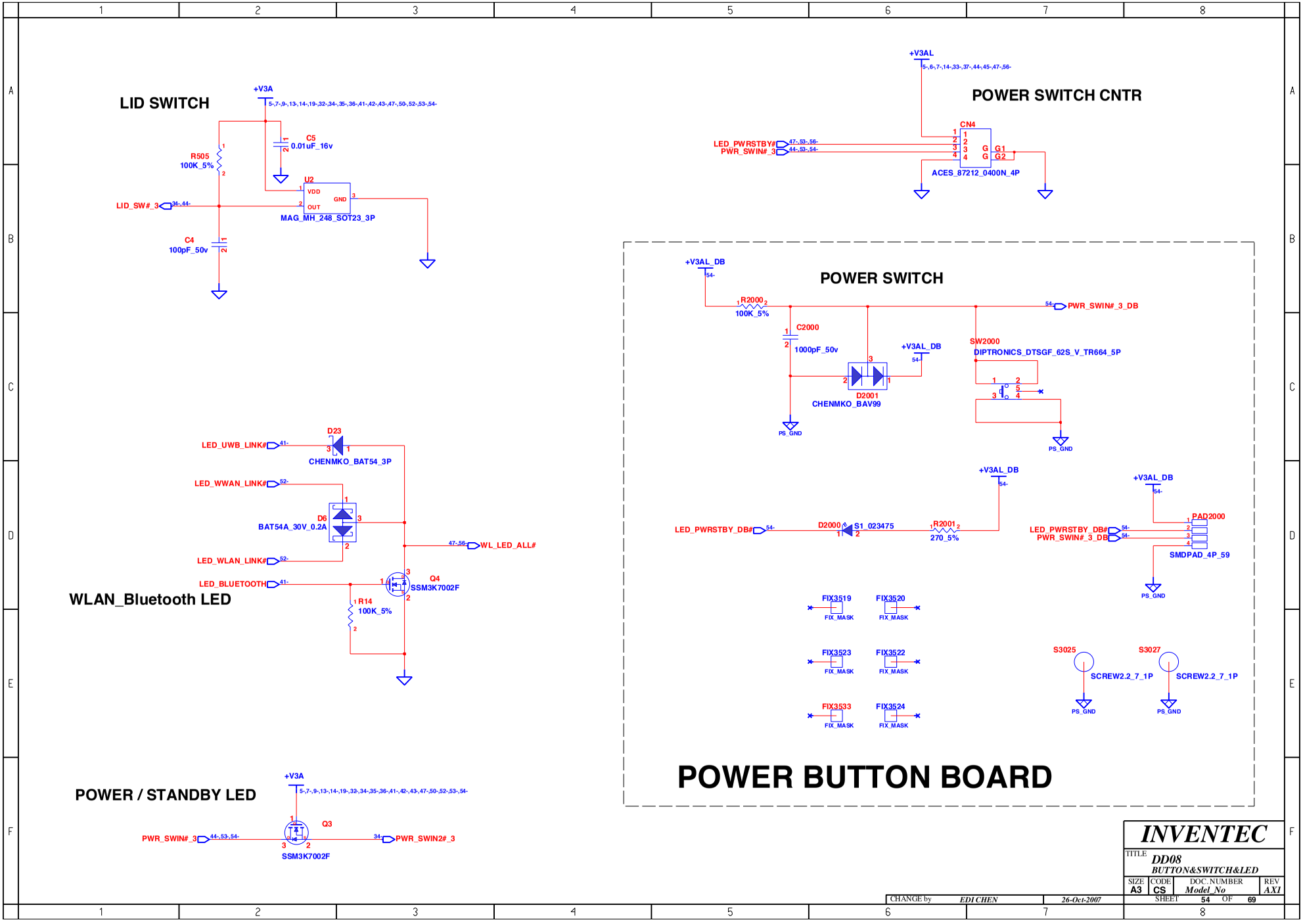

www.VinaFix.vn

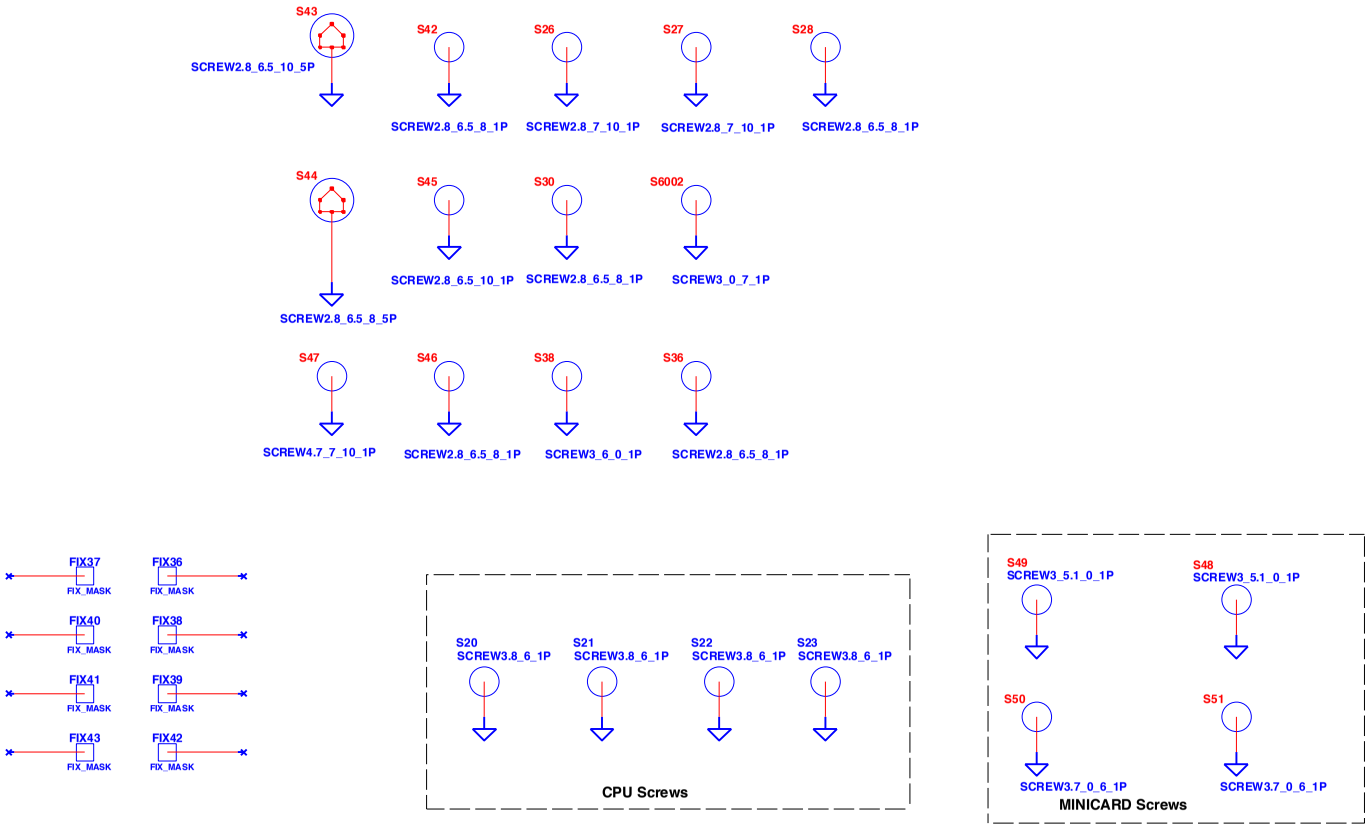

CHANGE by	EDI CHEN	26-Oct-2007	

INVENTEC

TITLE *DD08 SCREW*

SIZE	CODE	DOC. NUMBER	REV
A3	CS	*Model_No*	*AXI*

SHEET 55 OF 69

www.VinaFix.vn

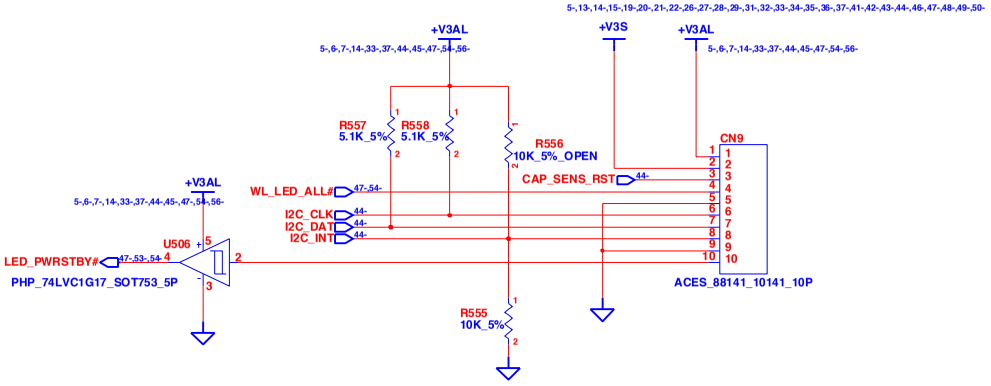

SWITCH BOARD CONN

CHANGE by	EDI CHEN	26-Oct-2007	

INVENTEC

TITLE *DD08*
Switch board Conn

SIZE	CODE	DOC. NUMBER	REV
A3	CS	*Model_No*	*AX1*

SHEET 56 OF 69

www.VinaFix.vn

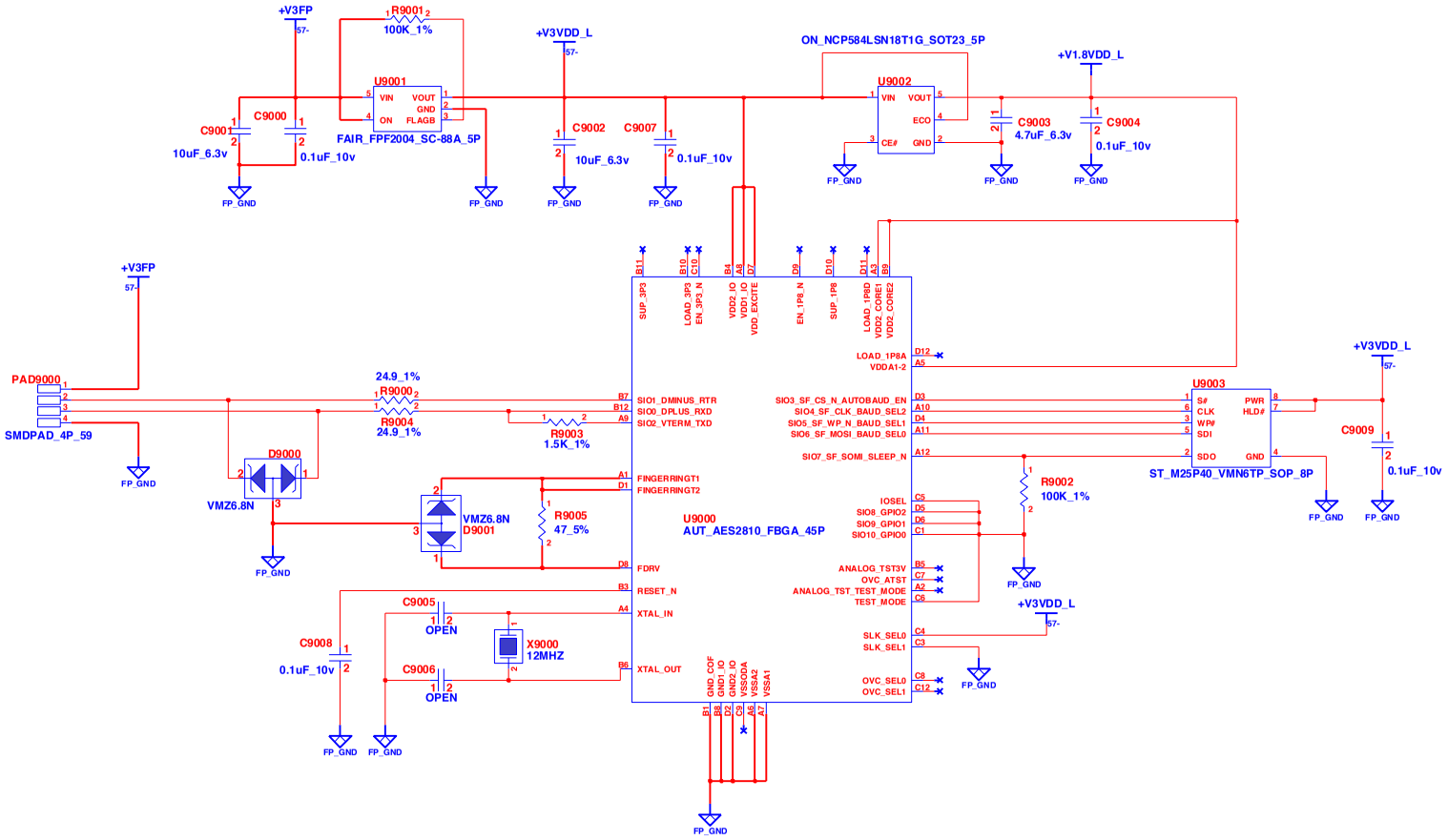

Layout notes :

Finger Print Reader DB

1. Placed R5 close to U1
2. Placed D1 closed to R5
3. D1 & D2 pin_A to GND should be a short trace(20mil max) using three via to connect to GND.

CHANGE by	EDI CHEN	26-Oct-2007	

INVENTEC

TITLE *DD08* *Finger Print board*

SIZE	CODE	DOC.NUMBER	REV
A3	CS	Model_No	AX1

SHEET 57 OF 69

www.VinaFix.vn

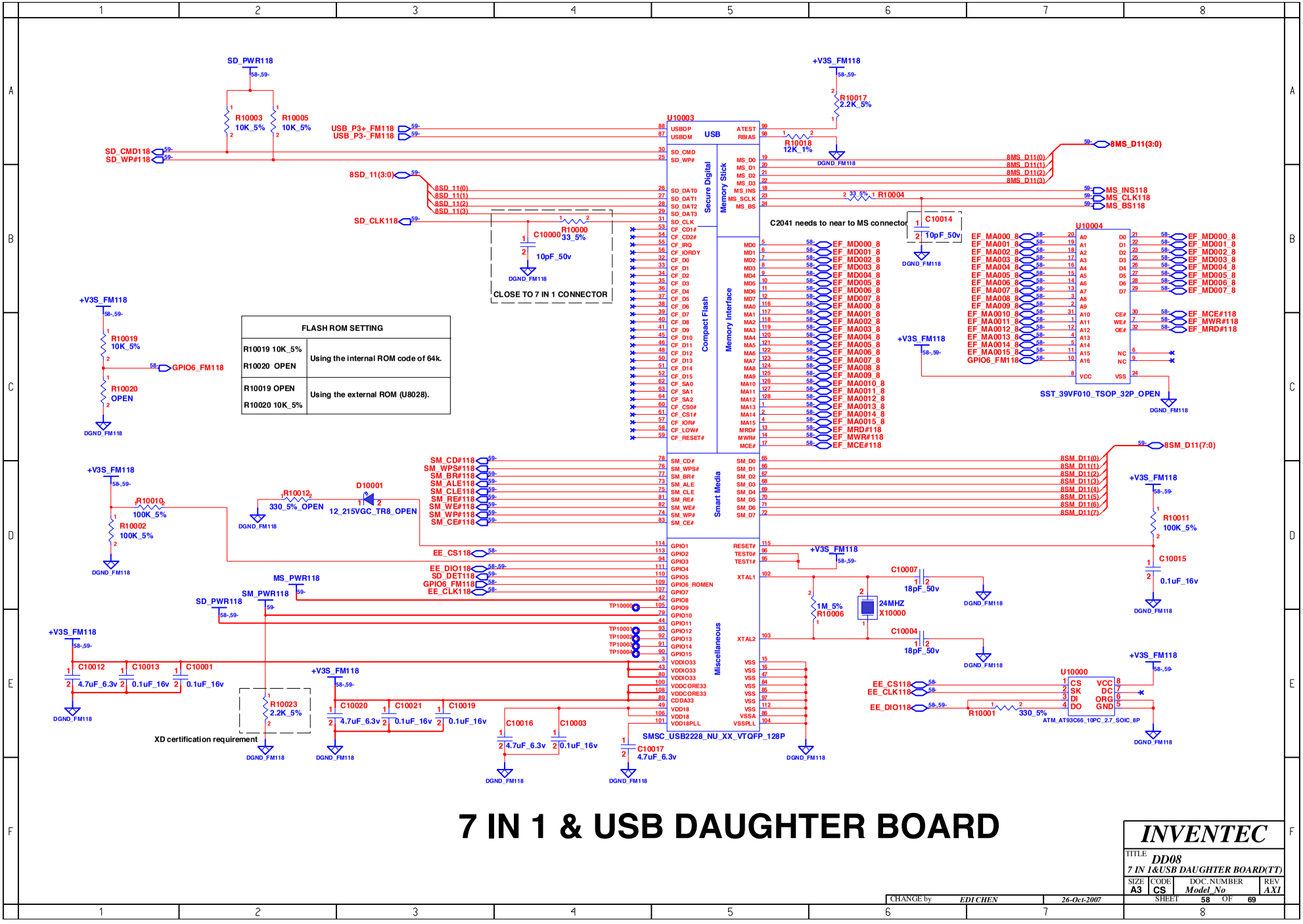

7 IN 1 & USB DAUGHTER BOARD

INVENTEC			
TITLE DD08 7 IN 1&USB DAUGHTER BOARD(TT)			
SIZE A3	CODE CS	DOC.NUMBER Model_No	REV AX1
CHANGE by EDI CHEN	26-Oct-2007	SHEET 58 OF 69	

www.VinaFix.vn

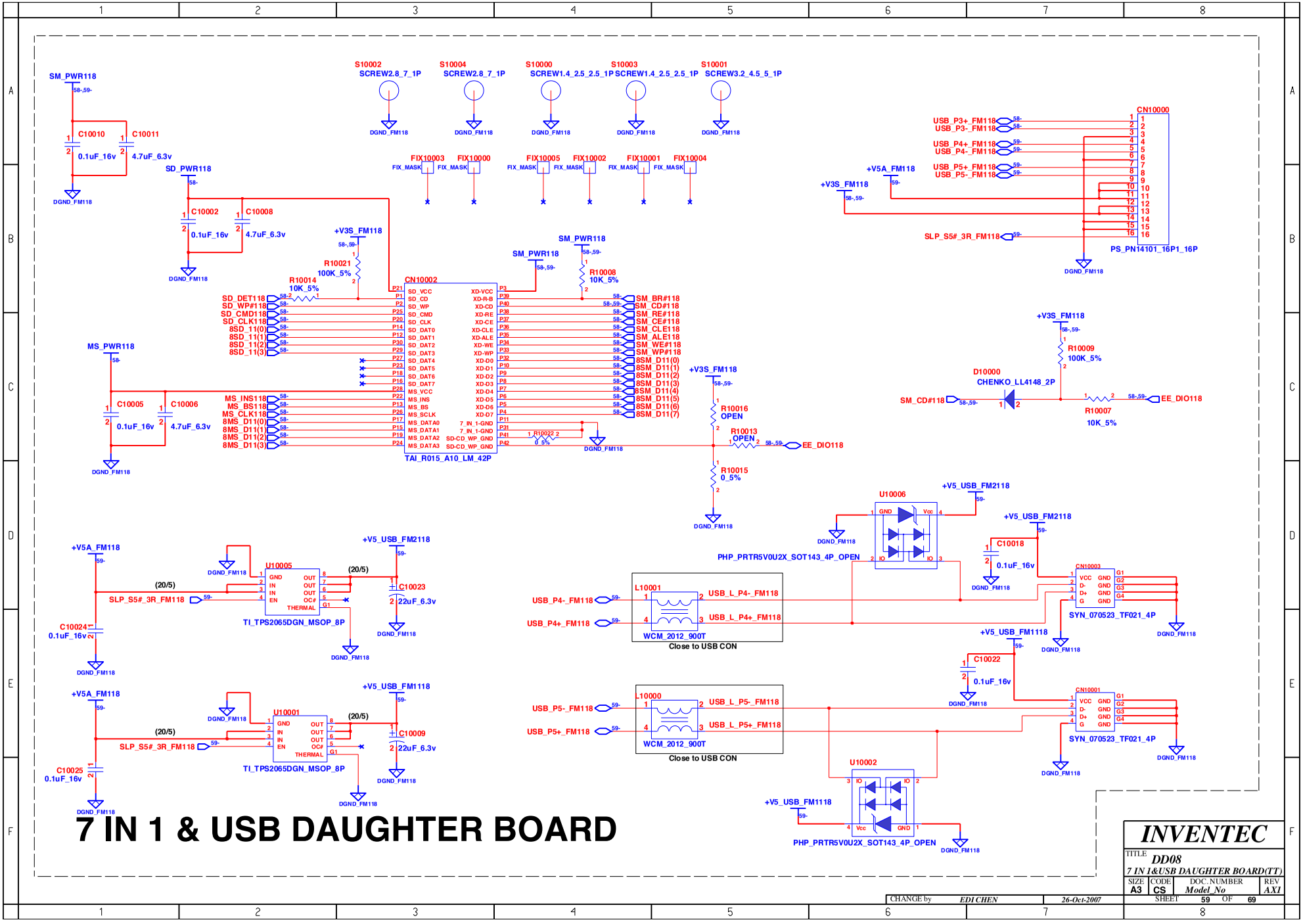

www.VinaFix.vn

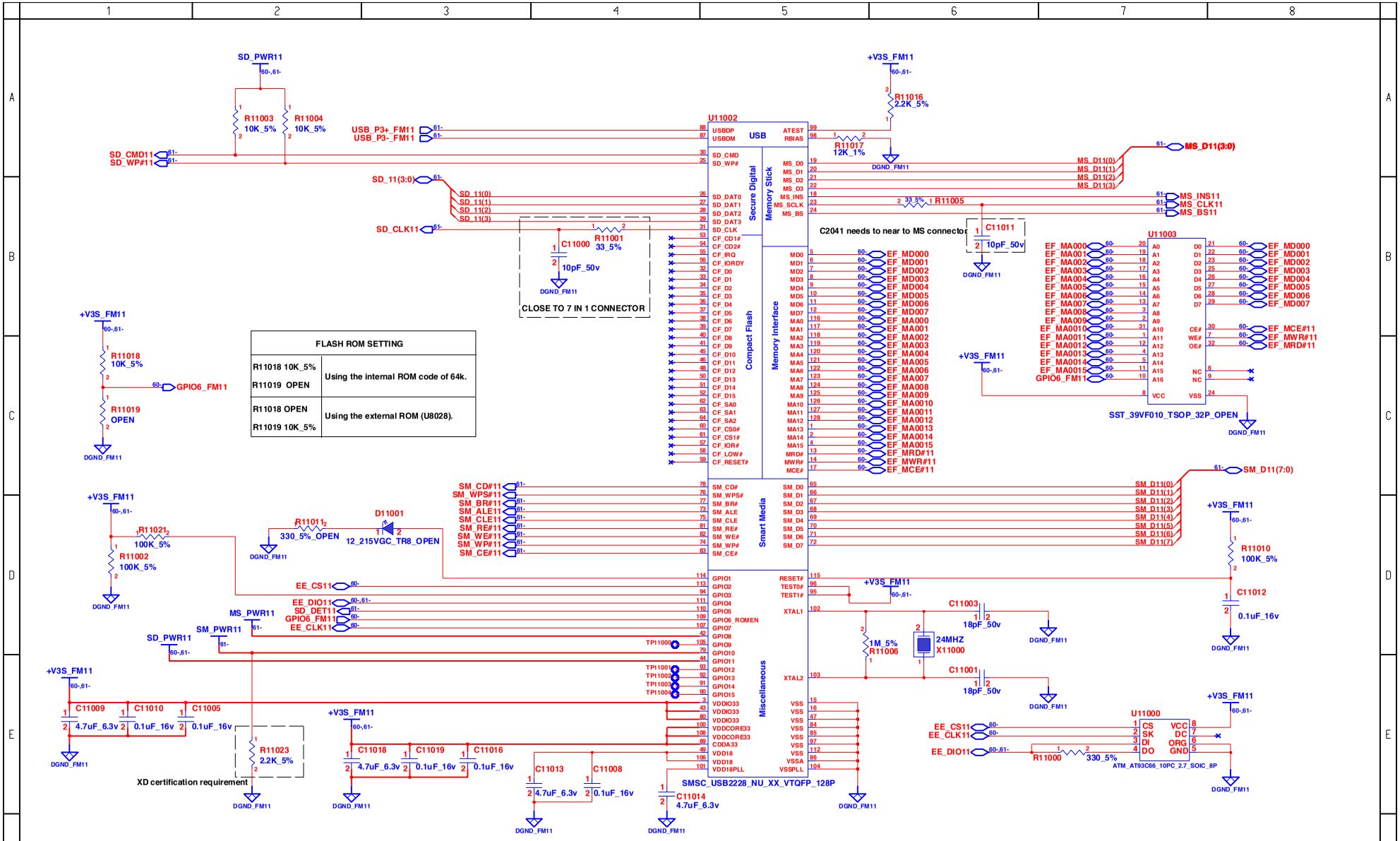

7 IN 1 & USB DAUGHTER BOARD

INVENTEC			
TITLE: DD08 — 7 IN 1&USB DAUGHTER BOARD(TS)			
SIZE: A3	CODE: CS	DOC.NUMBER: Model_No	REV: AXI
CHANGE by: EDI CHEN	26-Oct-2007	SHEET 60 OF 69	

www.VinaFix.vn

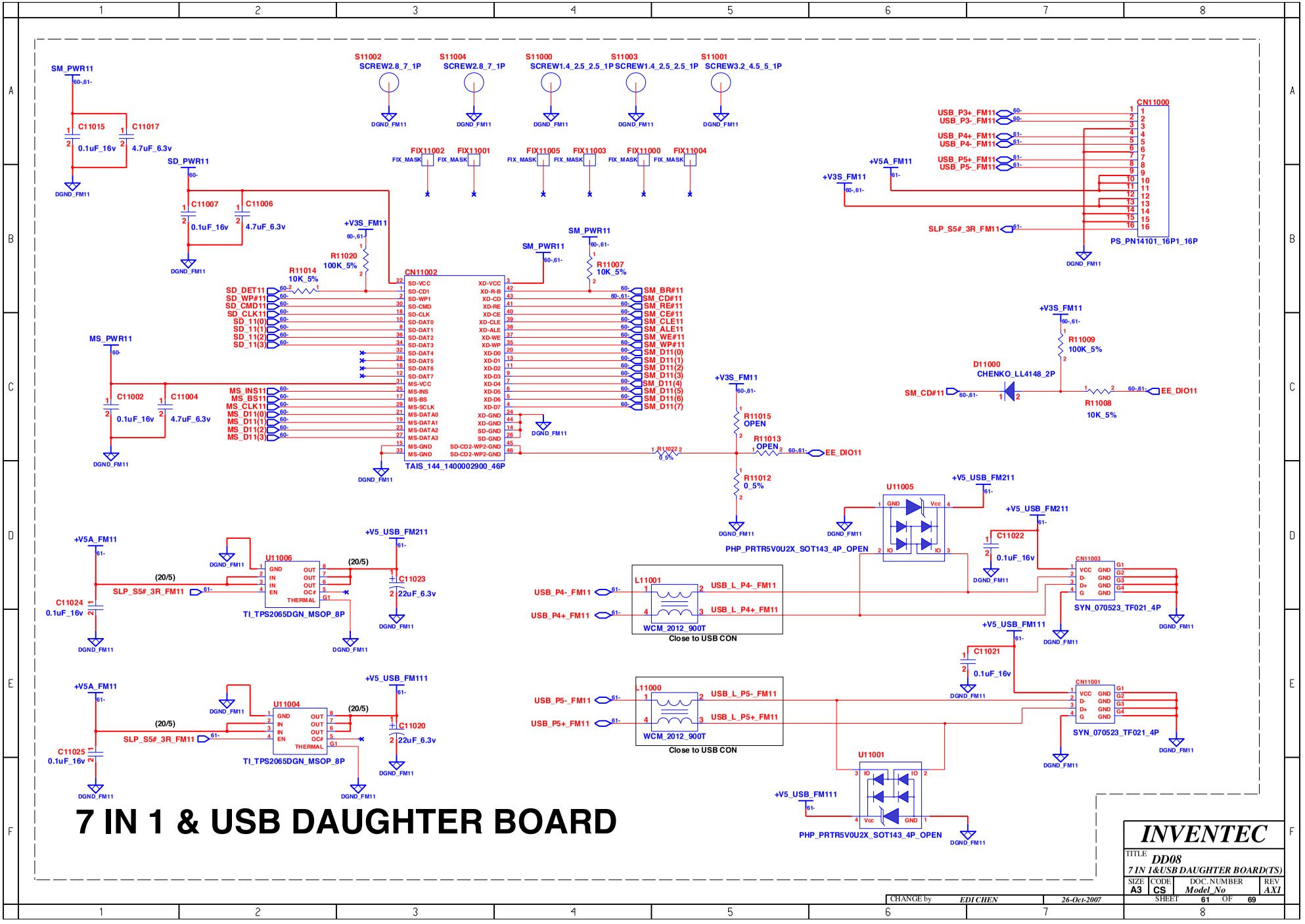

www.VinaFix.vn

AUDIO DAUGHTER BOARD

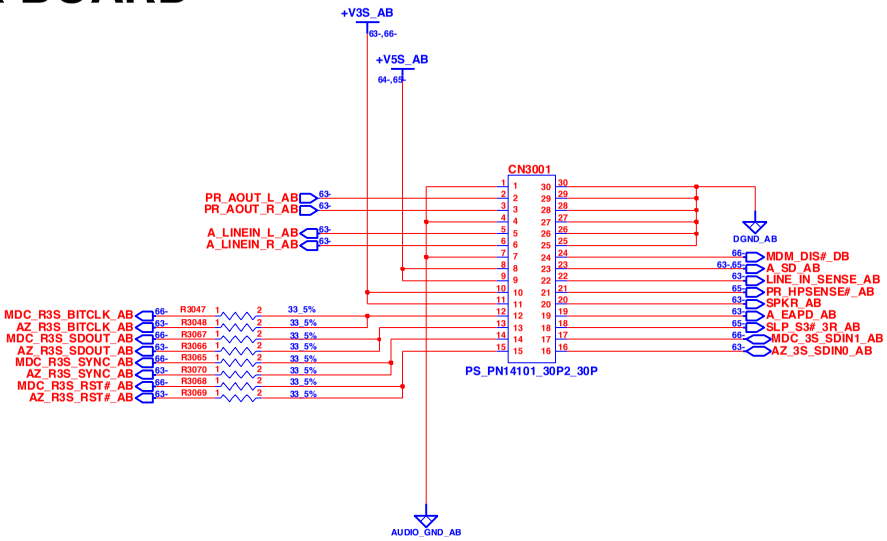

Audio CONN

1. AGND
2. PR_AOUT_L
3. PR_AOUT_R
4. AGND
5. PR_LINEIN_L
6. PR_LINEIN_R
7. AGND
8. +V5S
9. +V5S
10. +V3S
11. +V3S
12. AZ_R3S_BITCLK(MDC_R3S_BITCLK)
13. AZ_R3S_SDOUT(MDC_R3S_SDOUT)
14. AZ_R3S_SYNC(MDC_R3S_SYNC)
15. AZ_R3S_RST#(MDC_R3S_RST#)
16. AZ_3S_SDIN0_AB
17. MDC_3S_SDIN1_AB
18. SLP_S3#_3R_AB
19. A_EAPD_AB
20. SPKR_AB
21. PR_HPSENSE#_AB
22. LINE_IN_SENSE_AB
23. A_SD_AB
24. MODEM DISABLE#
25. DGND
26. DGND
27. DGND
28. DGND
29. DGND
30. DGND

FIX3501 FIX_MASK
FIX3502 FIX_MASK
FIX3504 FIX_MASK
FIX3531 FIX_MASK
FIX3532 FIX_MASK
FIX3505 FIX_MASK
FIX3506 FIX_MASK

CHANGE by	EDI CHEN	26-Oct-2007	

INVENTEC

TITLE DD08 AUDIO CNTR

SIZE	CODE	DOC.NUMBER	REV
A3	CS	Model_No	AX1

SHEET 62 OF 69

www.VinaFix.vn

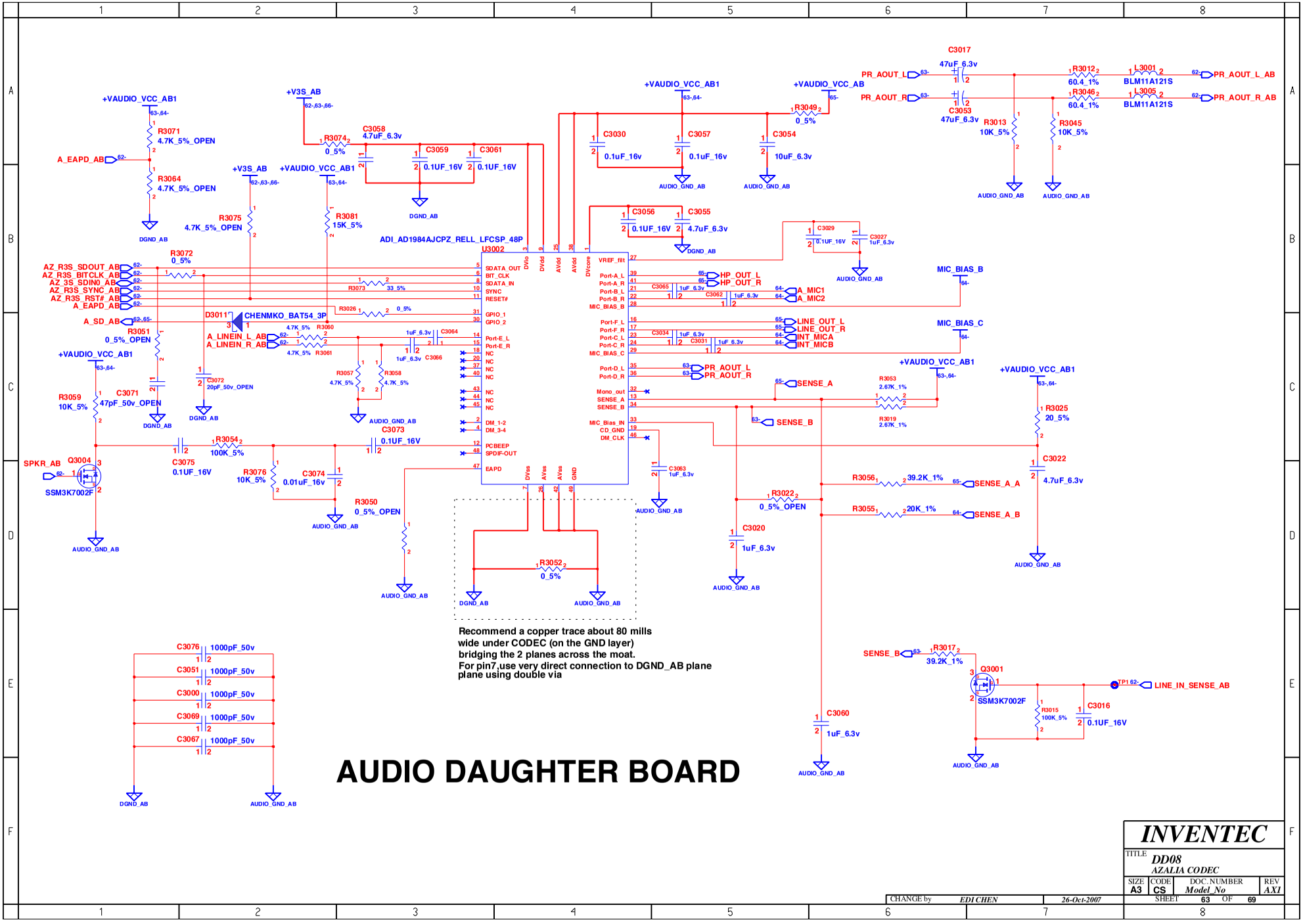

AUDIO DAUGHTER BOARD

INVENTEC			
TITLE: DD08 AZALIA CODEC			
SIZE: A3	CODE: CS	DOC.NUMBER: Model_No	REV: AX1
CHANGE by: EDI CHEN	26-Oct-2007	SHEET 63 OF 69	

www.VinaFix.vn

AUDIO DAUGHTER BOARD

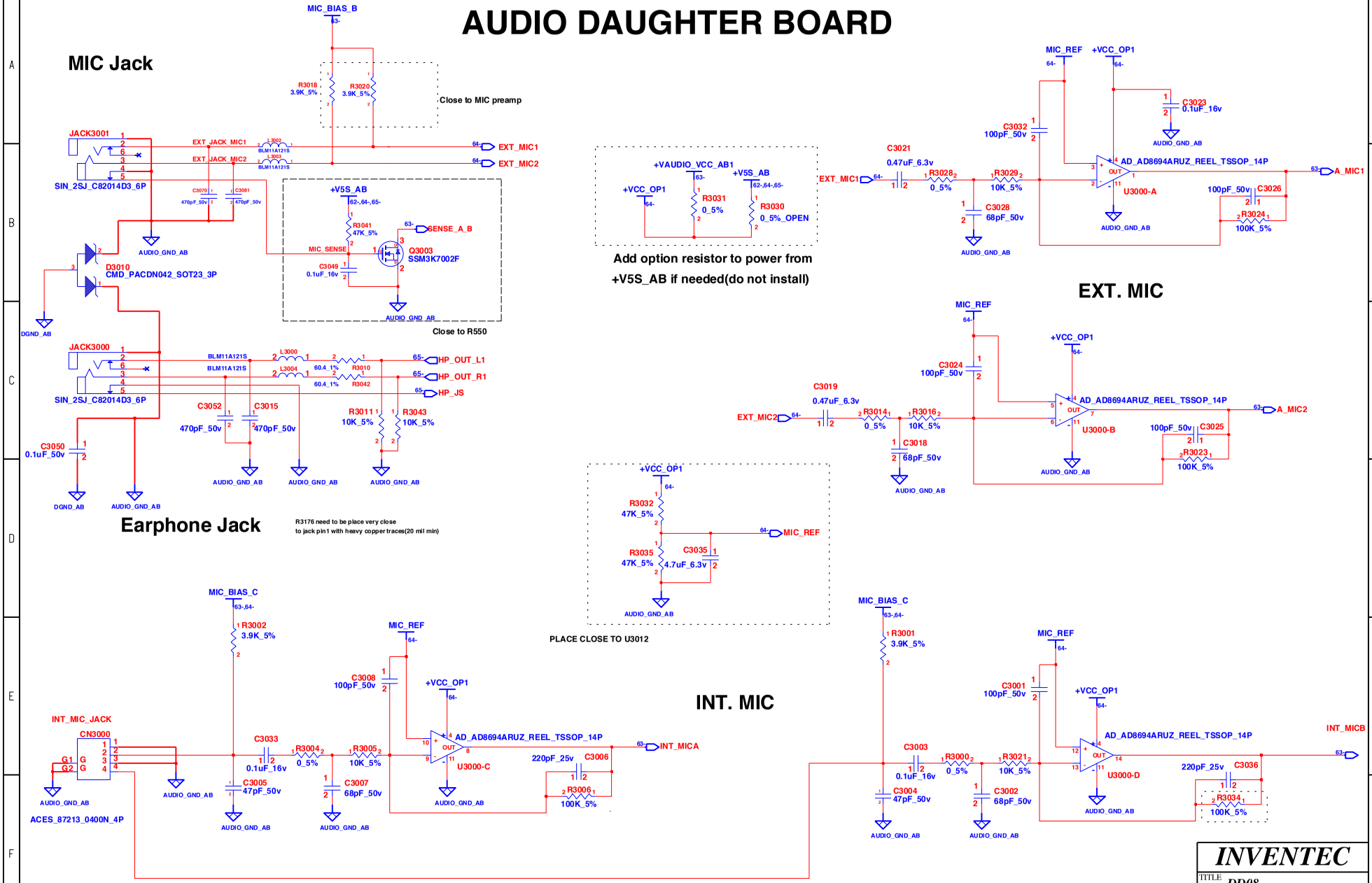

INVENTEC			
TITLE	DD08 EARPHONE & MIC JACK		
SIZE A3	CODE CS	DOC.NUMBER Model_No	REV AXI
CHANGE by EDI CHEN	31-Oct-2007	SHEET 64 OF 69	

www.VinaFix.vn

AUDIO DAUGHTER BOARD

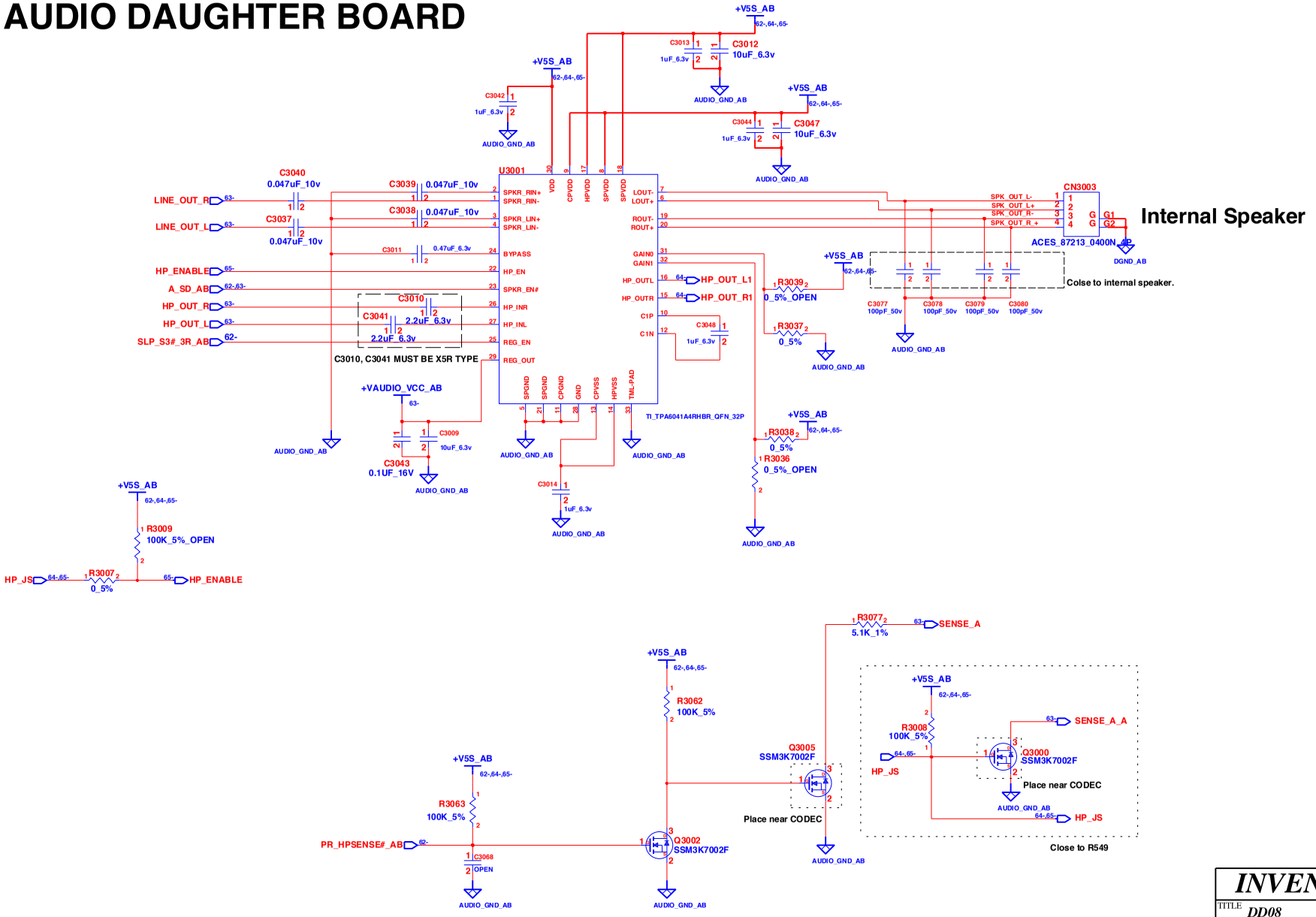

INVENTEC			
TITLE	DD08 AUDIO AMP &HP JACK		
SIZE A3	CODE CS	DOC.NUMBER Model_No	REV AXI
CHANGE by EDI CHEN	26-Oct-2007	SHEET 65 OF 69	

www.VinaFix.vn

AUDIO DAUGHTER BOARD

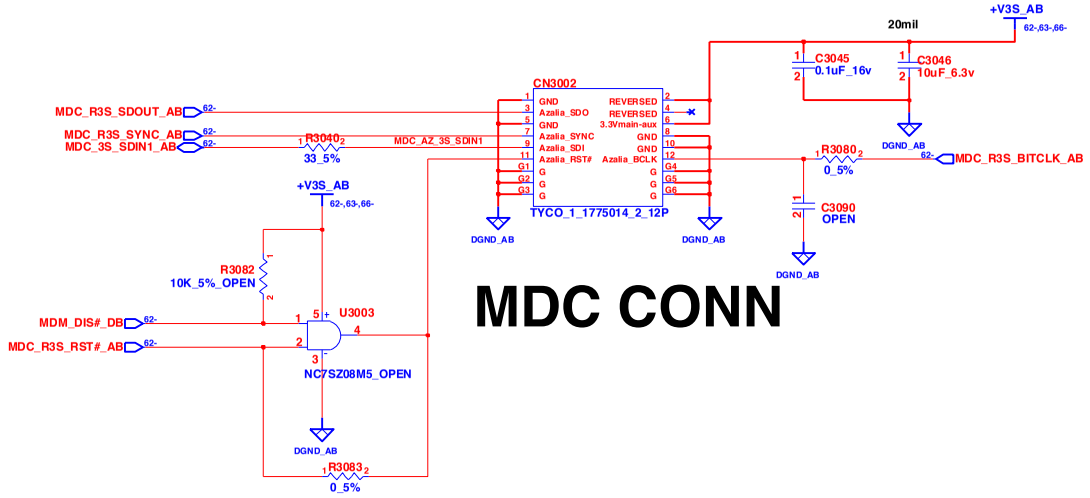

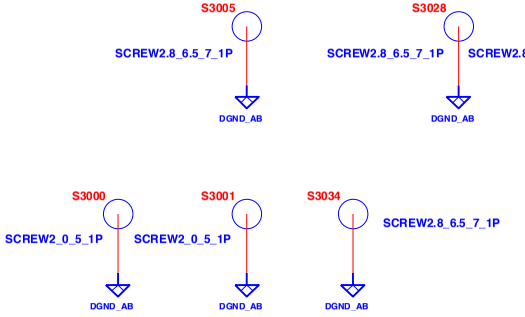

CHANGE by	EDI CHEN	26-Oct-2007	

INVENTEC

TITLE: DD08
MDC CONN(Ver 1.5)

SIZE	CODE	DOC.NUMBER	REV
A3	CS	Model_No	AX1

SHEET 66 OF 69

www.VinaFix.vn

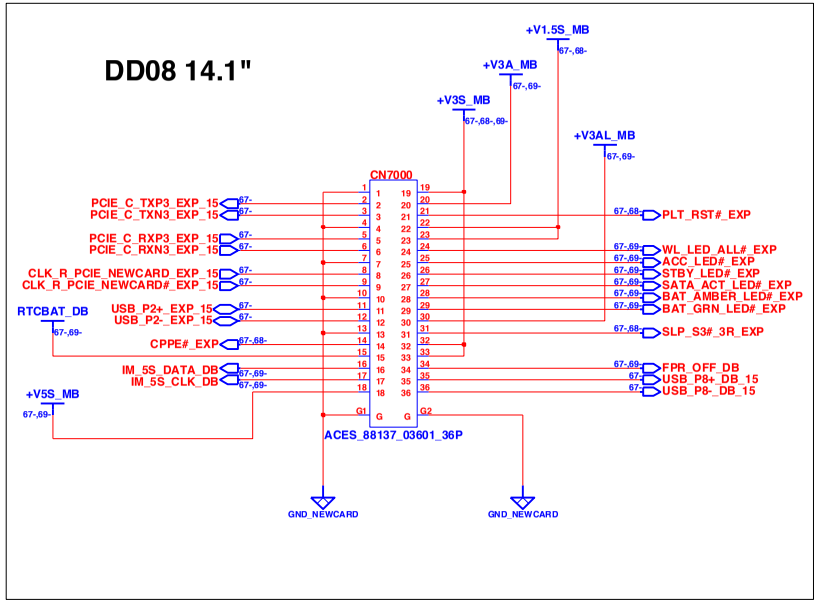

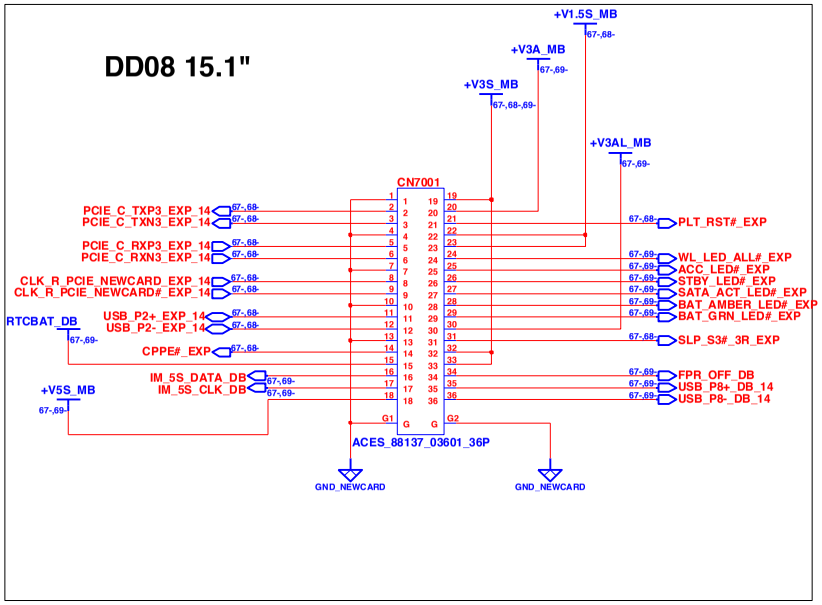

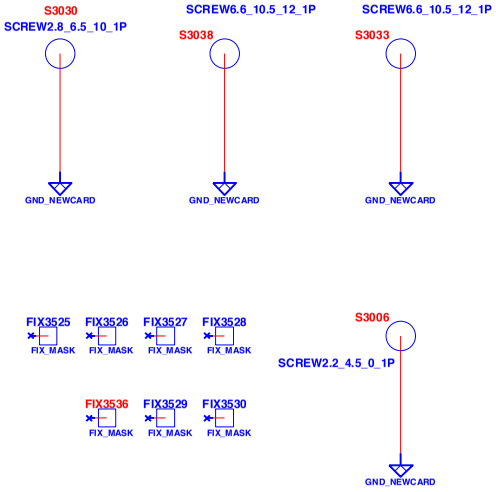

1	GND	19	+V3S
2	PCIE_C_TXP	20	+V3A
3	PCIE_C_TXN	21	PLT_RST#
4	GND	22	+V1.5S
5	PCIE_C_RXP	23	+V1.5S
6	PCIE_C_RXN	24	WL_LED_ALL#
7	GND	25	ACC_LED#
8	CLK_R_PCIE_NEWCARD	26	STBY_LED#
9	CLK_R_PCIE_NEWCARD#	27	LED_3S_SATA#
10	GND	28	BAT_AMBERLED#
11	USB_P+	29	BAT_GRNLED#
12	USB_P-	30	LED_3S_ODD#
13	GND	31	SLP_3S#_3R
14	CLK_R_REQ#	32	+V3S
15	RTCBAT	33	+V3S
16	TOUCHPAD DATA	34	FPR_OFF
17	TOUCHPAD CLK	35	USB_P8+
18	+V5S	36	USB_P8-

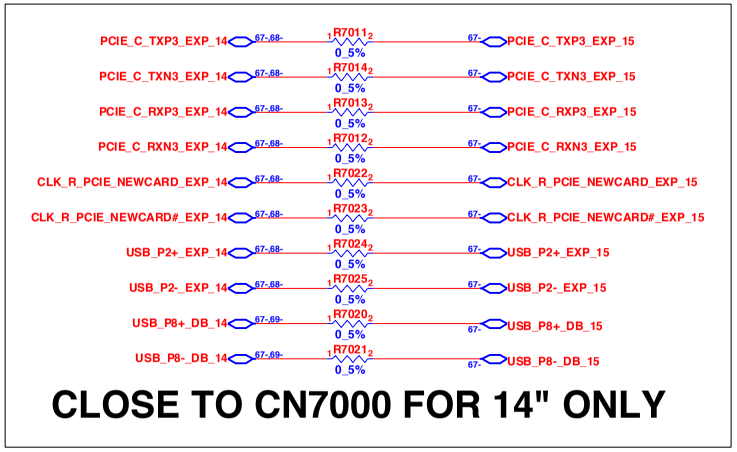

CLOSE TO CN7000 FOR 14" ONLY

EXPRESS CARD DAUGHTER BOARD

CHANGE by	EDI CHEN	26-Oct-2007	

INVENTEC

TITLE: DD08 NEW CARD BOARD

SIZE	CODE	DOC. NUMBER	REV
A3	CS	Model_No	AX1

SHEET 67 OF 69

www.VinaFix.vn

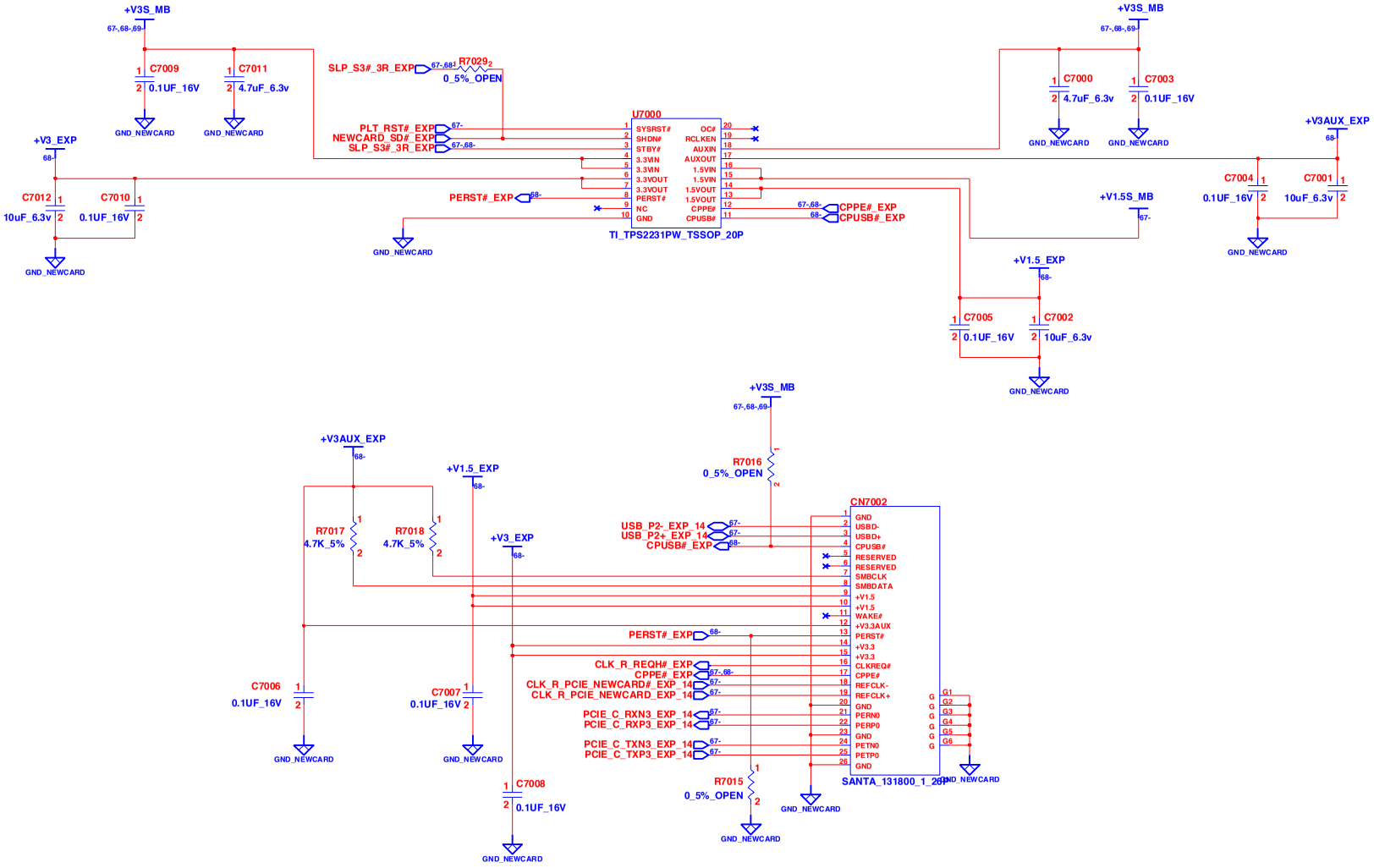

EXPRESS CARD DAUGHTER BOARD

INVENTEC			
TITLE DD08 NEW CARD CNTR			
SIZE A3	CODE CS	DOC.NUMBER Model_No	REV AX1
CHANGE by EDI CHEN	26-Oct-2007	SHEET 68 OF 69	

www.VinaFix.vn

EXPRESS CARD DAUGHTER BOARD

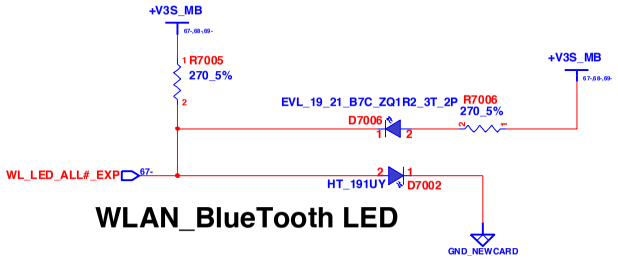

WLAN_BlueTooth LED

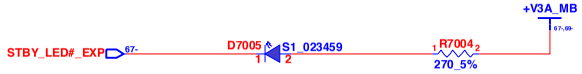

Power / Standby LED

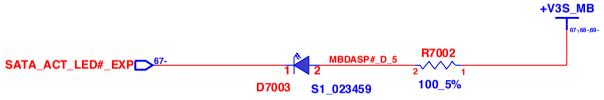

HDD & ODD LED

Accelero-Meter LED

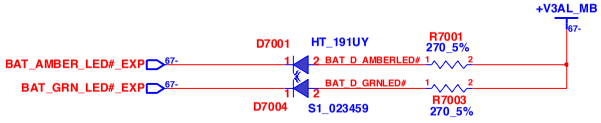

Battery-Charge LED

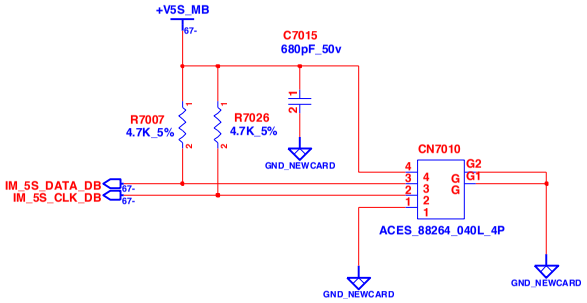

TOUCH PAD CNTR

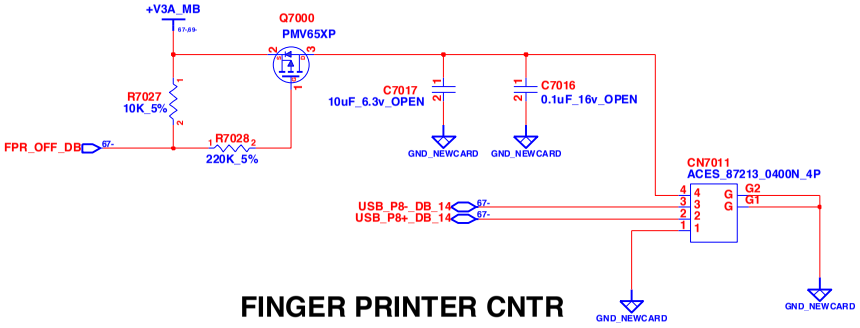

FINGER PRINTER CNTR

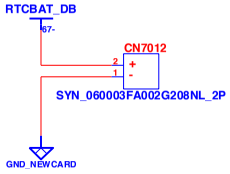

RTC CNTR

CHANGE by	EDI CHEN	26-Oct-2007	

INVENTEC

TITLE *DD08 LED SIGNAL*

SIZE	CODE	DOC.NUMBER	REV
A3	CS	Model_No	AX1

SHEET 69 OF 69

www.VinaFix.vn