Schematics Page Index (Title / Revision / Change Date)

Page	Title of Schematics Page	Rev.	Date
01	Schematics Page Index	2.0	08/24
02	Block Diagram	2.0	08/24
03	Yonah(HOST BUS) 1/2	2.0	08/24
04	Yonah(HOST BUS) 2/3	2.0	08/24
05	Yonah(Power/Gnd) 3/3	2.0	08/24
06	CALISTOGA (HOST) 1/7	2.0	08/24
07	CALISTOG (DMI) 2/7	2.0	08/24
08	CALIST (GRAPHIC) 3/7	2.0	08/24
09	CALISTOGA (DDRII) 4/7	2.0	08/24
10	CALIST (POWER,VCC) 5/7	2.0	08/24
11	CALIST (VCC CORE) 6/7	2.0	08/24
12	CALIST (VSS) 7/7	2.0	08/24
13	DDRII(SO-DIMM_0) 1/3	2.0	08/24
14	DDRII(SO-DIMM_1) 2/3	2.0	08/24
15	DDRII(Termination) 3/3	2.0	08/24
16	LVDS	2.0	08/24
17	CRT	2.0	08/24
18	LAN CONTROLL	2.0	08/24
19	LAN TRANSFORMER	2.0	08/24
20	CLOCK GEN	2.0	08/24
21	ICH7-M(PCI/USB) 1/5	2.0	08/24
22	ICH7-M(LPC,IDE,SATA)2/5	2.0	08/24
23	ICH7-M(GPIO) 3/5	2.0	08/24
24	ICH7-M(POWER) 4/5	2.0	08/24
25	ICH7-M(GND) 5/5	2.0	08/24
26	SATA HDD/CD-ROM	2.0	08/24
27	EC+KBC	2.0	08/24
28	Flash ROM/X-Bus	2.0	08/24
29	LED/Touch PAD	2.0	08/24
30	Mini-PCIE Card	2.0	08/24
31	FAN	2.0	08/24
32	OIDE	2.0	08/24
33	AUDIO(CODEC & POWER)	2.0	08/24
34	AUDIO(AMP & HP & SPK)	2.0	08/24
35	AUDIO(EXTMIC)	2.0	08/24
36	AUDIO (MUTE)	2.0	08/24
37	EXPRESS CARD/MDC	2.0	08/24
38	PCI (PCI BUS)	2.0	08/24
39	PCI (ILINK)	2.0	08/24
40	PCI (MS-DUO/MDC)	2.0	08/24
41	Button/LID Switch/EMI CAP	2.0	08/24
42	USB2.0	2.0	08/24
43	HOLE	2.0	08/24
44	Power Design Diagram	2.0	08/24
45	DCIN&Charger	2.0	08/24
46	SYS Power (+3_3V/+5V)	2.0	08/24
47	SYS Power(+1_5V/+1_05V)	2.0	08/24
48	DDR2 Power(+1_8V/+0_9V)	2.0	08/24
49	CPU_Vcore ---MAX8771	2.0	08/24
50	Others power plan	2.0	08/24
51	OVP protection	2.0	08/24
52	History (1)	2.0	08/24
53	History (2)	2.0	08/24
54			
55			
56			
57			
58			
59			
60			

P. Leader	Check by	Design by

Project Code & Schematics Subject:	MS70 Main Board	PCB P/N:	(FUBAI) 1P-0068100-6011 (NAN YA) 1P-0068200-6011 (HANSTAR) 1P-0068500-6011

FOXCONN HON HAI Precision Ind. Co., Ltd. CCPBG - R&D Division

Title	Index Page	
Size A3	Document Number MS70-1-01	Rev 2.0
Date: Tuesday, August 22, 2006	Sheet 1 of 55	

Vinafix
www.vinafix.vn

RAPTOR/MS70(CALISTOGA GM/GML Block Diagram)

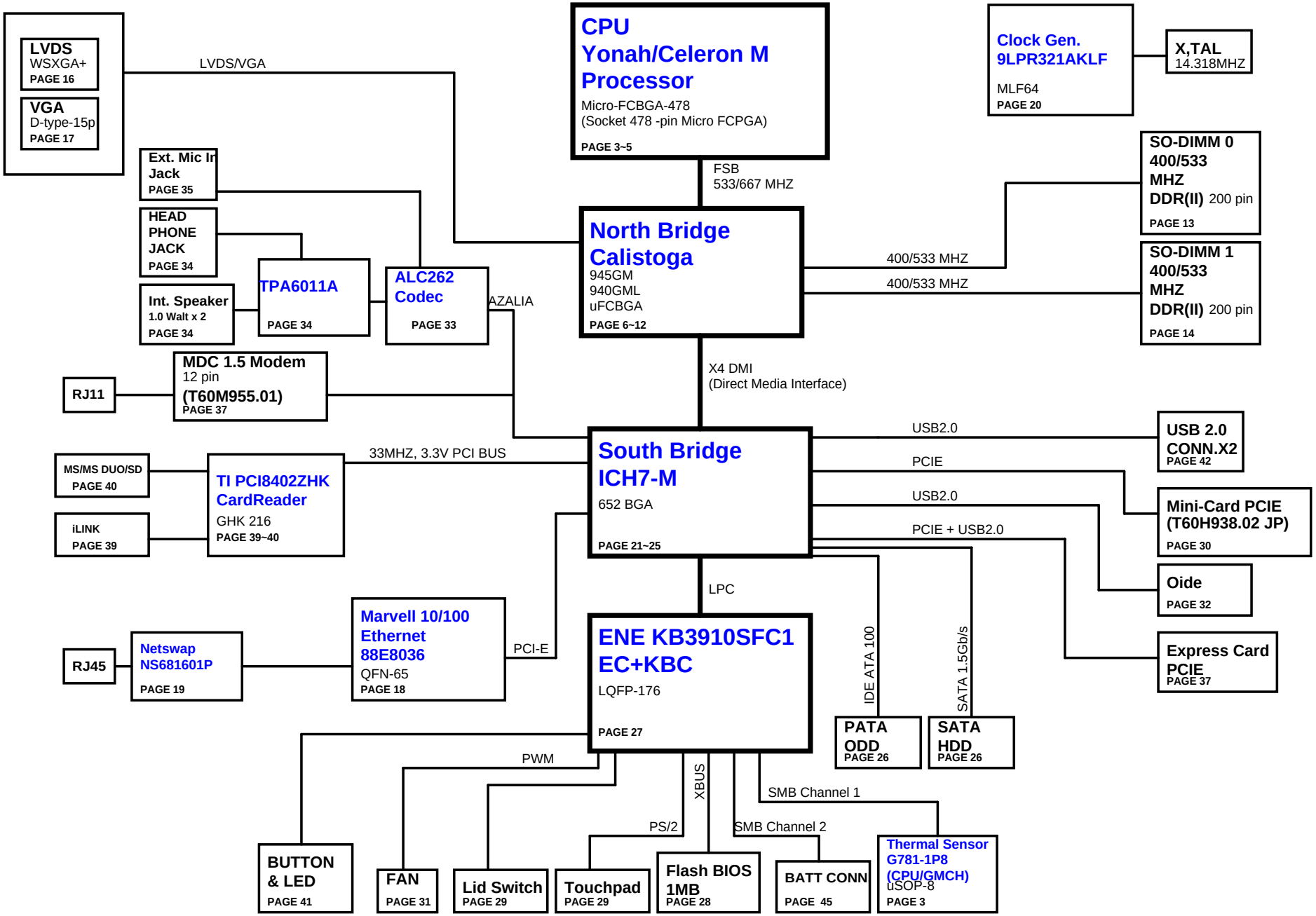

FOXCONN	HON HAI Precision Ind. Co., Ltd. CCPBG - R&D Division	
Title	Block Diagram	
Size Custom	Document Number MS70-1-01	Rev 2.0
Date: Tuesday, August 22, 2006	Sheet 2 of 55	

www.vinafix.vn

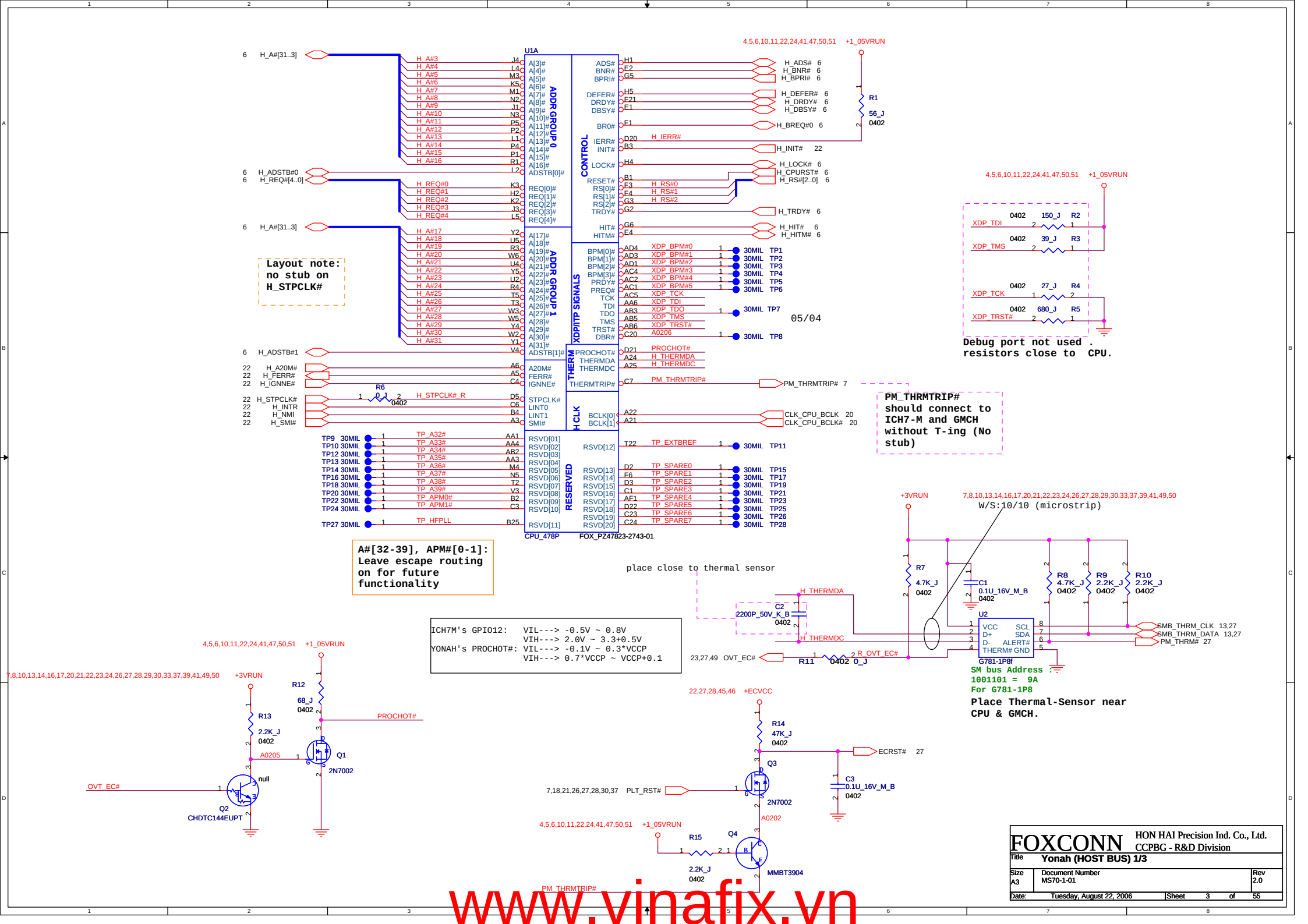

www.vinafix.vn

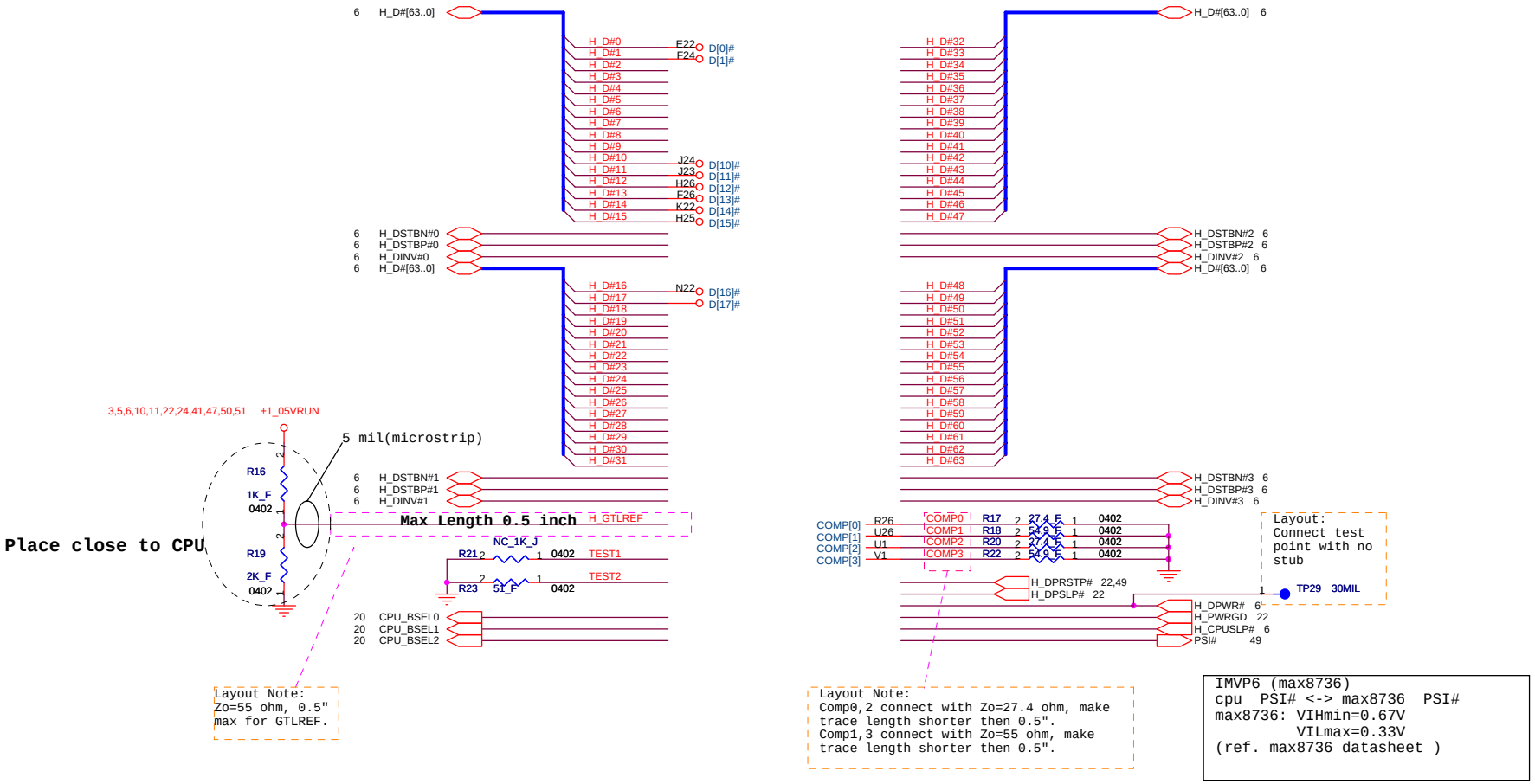

FOXCONN	HON HAI Precision Ind. Co., Ltd. CCPBG - R&D Division	
Title	Yonah (HOST BUS) 2/3	
Size A3	Document Number MS70-1-01	Rev 2.0
Date: Tuesday, August 22, 2006	Sheet 4 of 55	

www.vinafix.vn

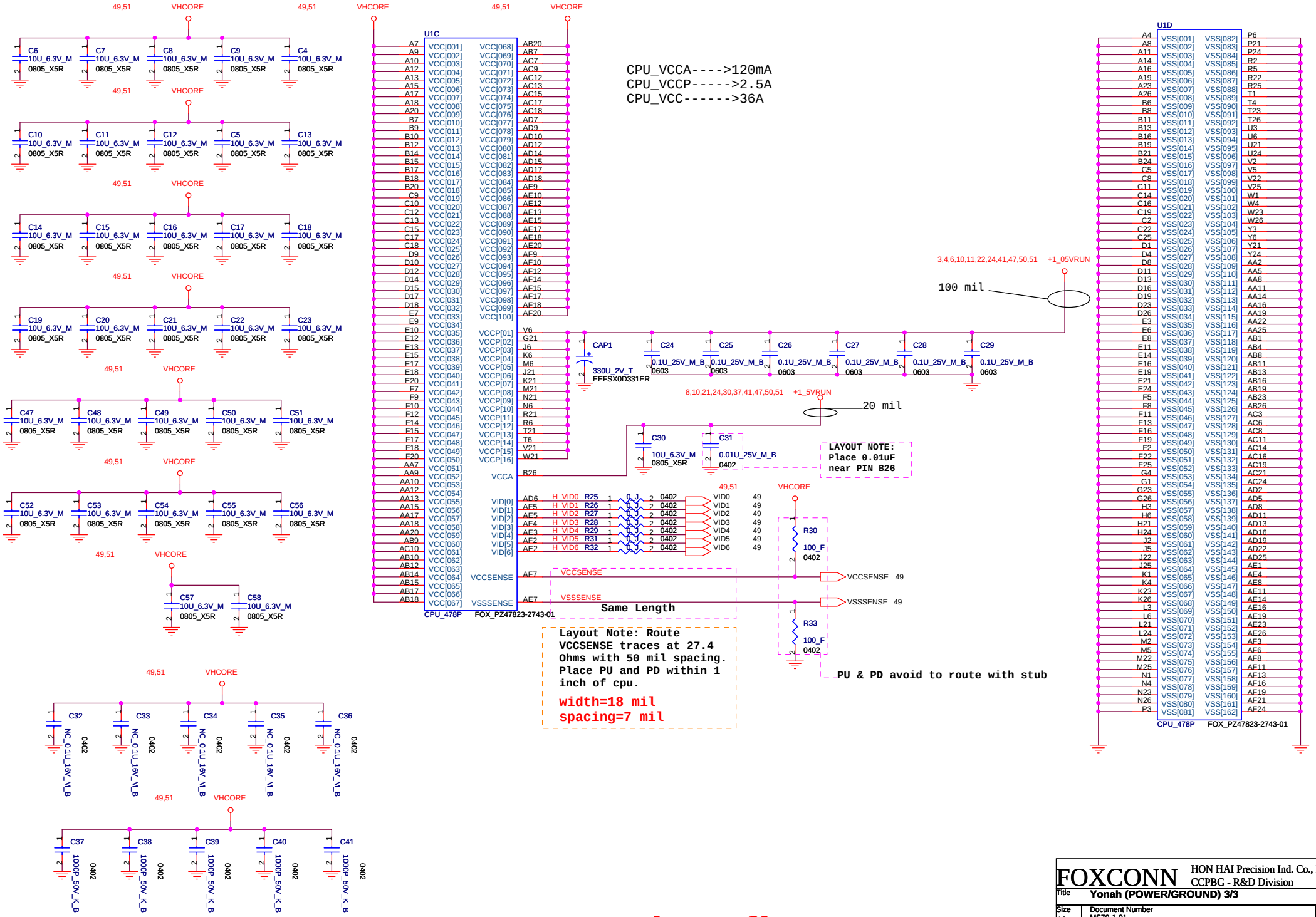

FOXCONN HON HAI Precision Ind. Co., Ltd.
CCPBG - R&D Division

Title	Yonah (POWER/GROUND) 3/3	
Size A3	Document Number MS70-1-01	Rev 2.0
Date: Tuesday, August 22, 2006	Sheet 5 of 55	

www.vinafix.vn

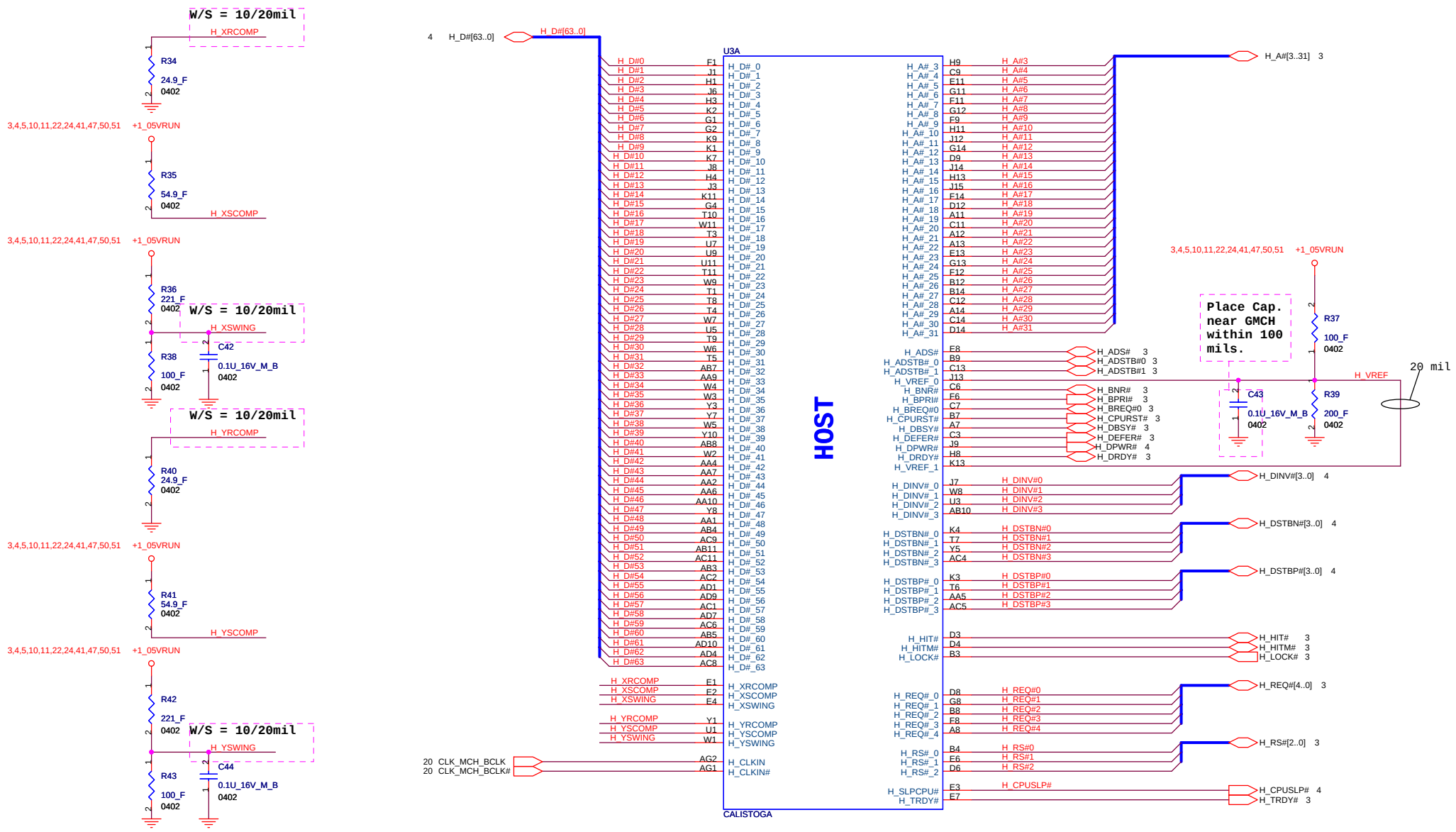

FOXCONN HON HAI Precision Ind. Co., Ltd. CCPBG - R&D Division

Title	CALISTOGA (HOST) 1 of 7		
Size A3	Document Number MS70-1-01		Rev 2.0
Date: Tuesday, August 22, 2006	Sheet 6 of 55		

www.vinafix.vn

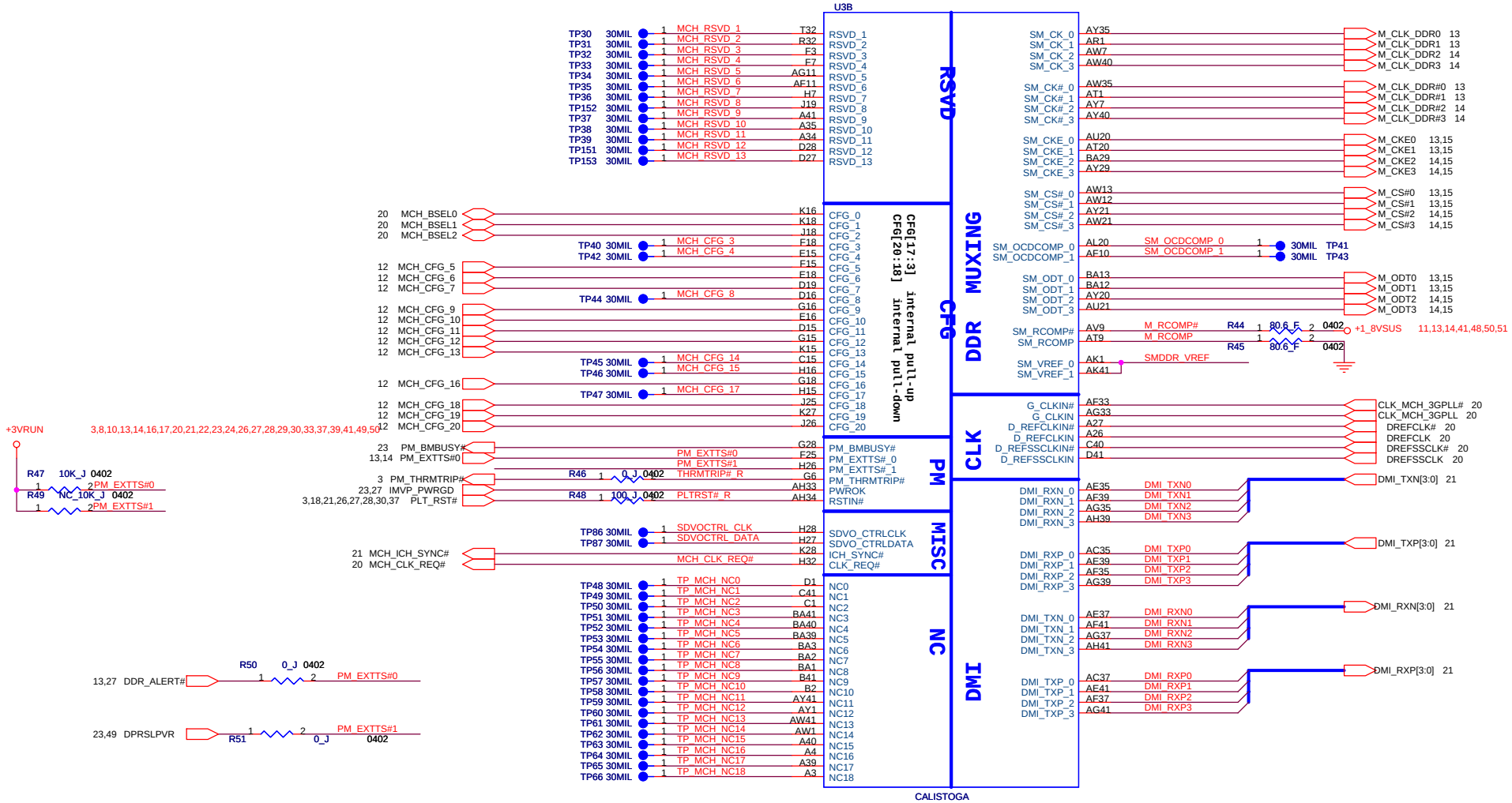

FOXCONN	HON HAI Precision Ind. Co., Ltd. CCPBG - R&D Division
Title	CALISTOGA (DMI) 2 of 7
Size A3	Document Number MS70-1-01
Rev	2.0
Date: Tuesday, August 22, 2006	Sheet 7 of 55

www.vinafix.vn

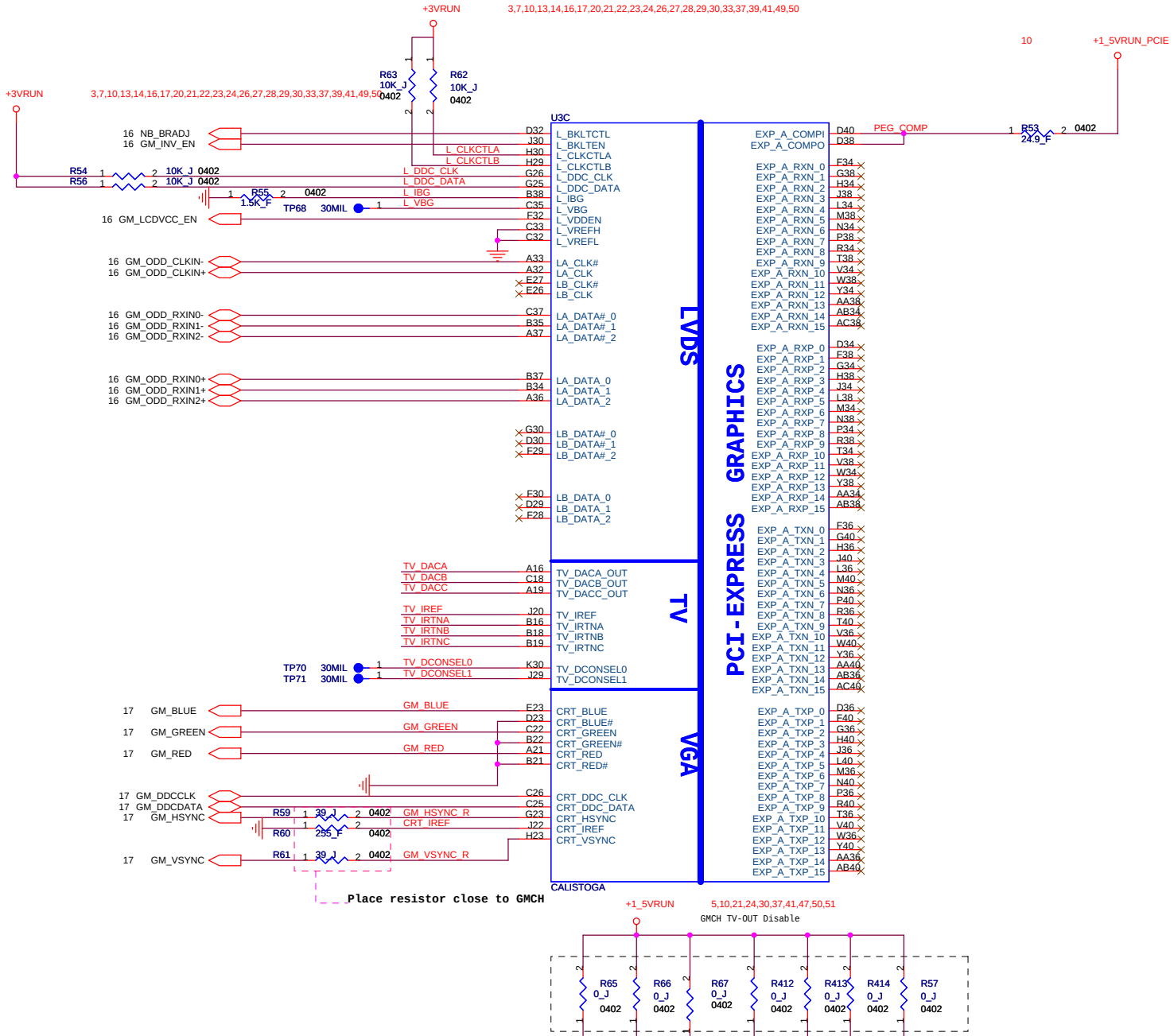

FOXCONN	HON HAI Precision Ind. Co., Ltd. CCPBG - R&D Division	
Title	CALISTOGA (DMI) 3 of 7	
Size A3	Document Number MS70-1-01	Rev 2.0
Date: Tuesday, August 22, 2006	Sheet 8 of 55	

www.vinafix.vn

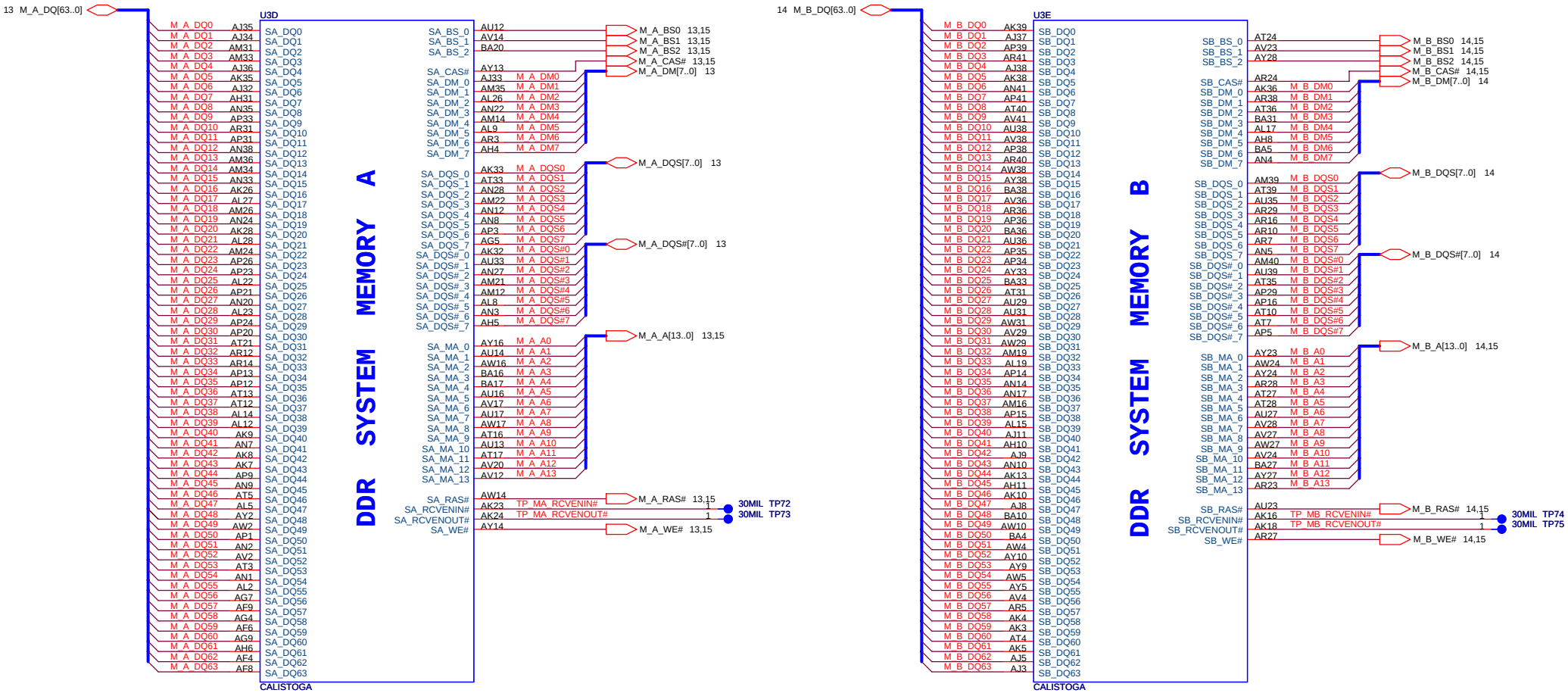

FOXCONN	HON HAI Precision Ind. Co., Ltd. CCPBG - R&D Division	
Title	CALISTOGA (DDRII) 4 of 7	
Size A3	Document Number MS70-1-01	Rev 2.0
Date: Tuesday, August 22, 2006	Sheet 9 of 55	

www.vinafix.vn

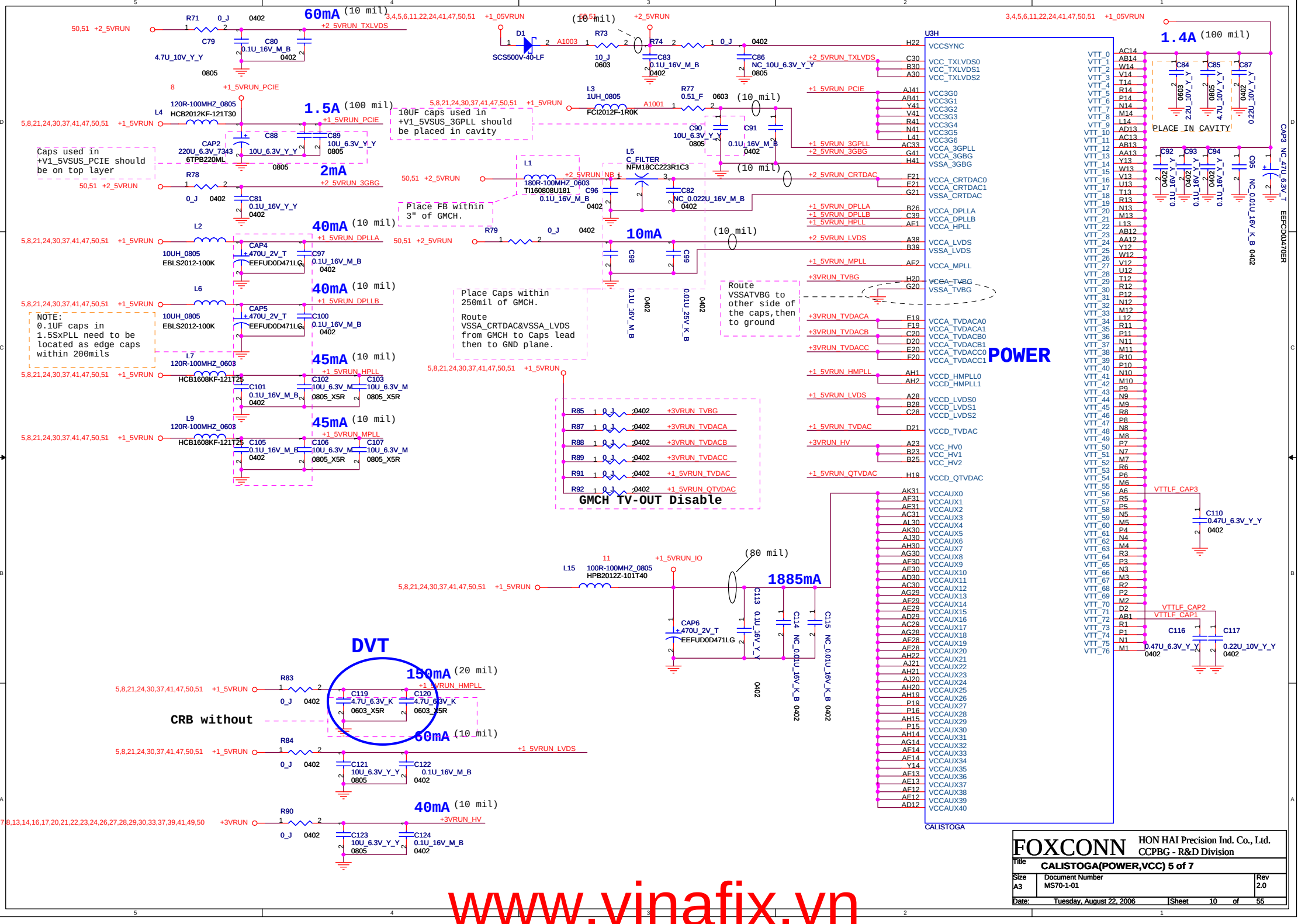

www.vinafix.vn

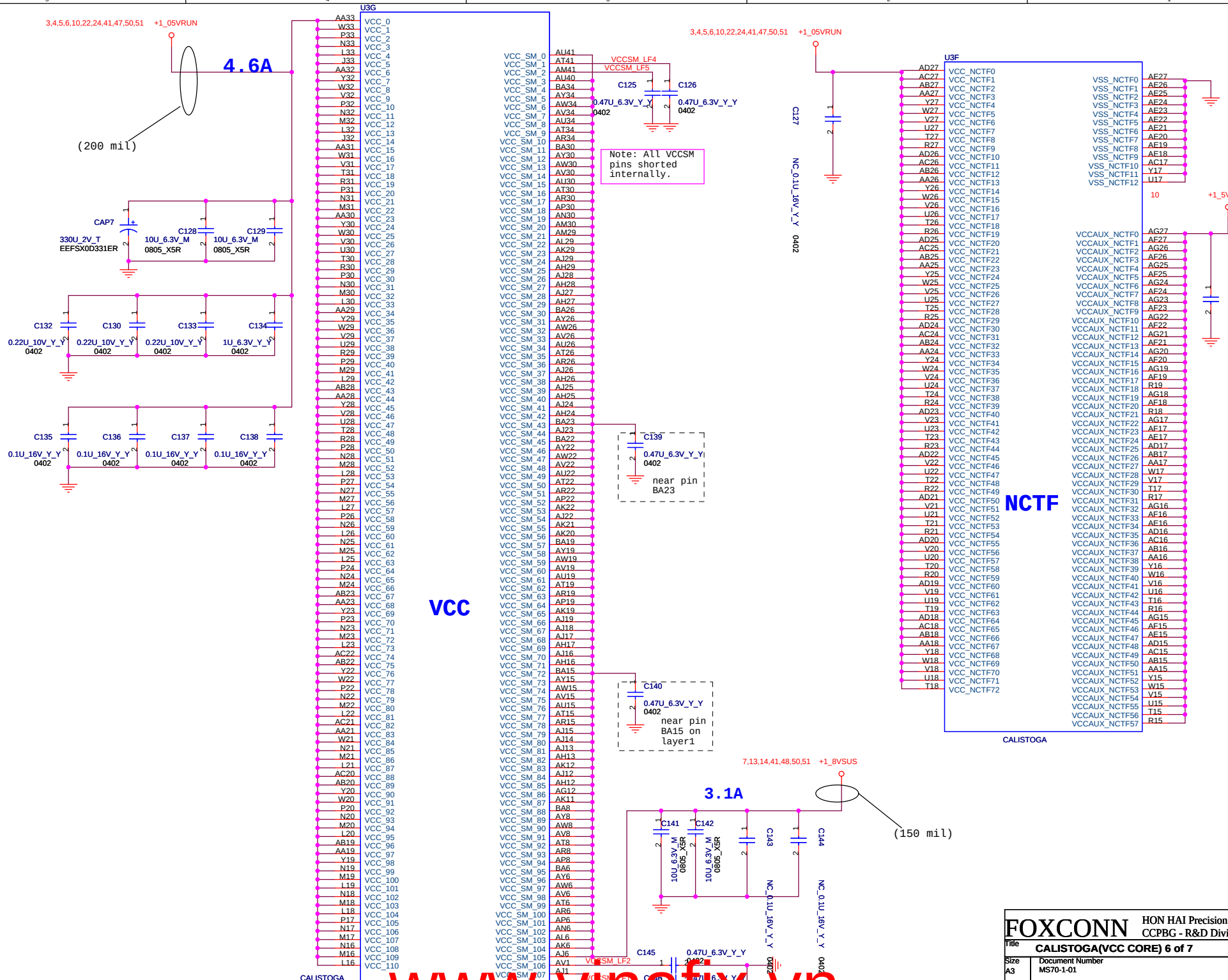

FOXCONN HON HAI Precision Ind. Co., Ltd. CCPBG - R&D Division

Title: CALISTOGA(VCC CORE) 6 of 7

Size	Document Number	Rev
A3	MS70-1-01	2.0

Date: Tuesday, August 22, 2006 Sheet 11 of 55

www.vinafix.vn

7 MCH_CFG_5 — 1 — 30MIL TP76

MCH_CFG_5	Low = DMIx2 High = DMIx4

7 MCH_CFG_6 — 1 — 30MIL TP77

MCH_CFG_6	Low = Moby Dick High = Calistoga

DDR2 select (default high)

7 MCH_CFG_7 — 1 — 30MIL TP78

MCH_CFG_7 (CPU Strap)	Low = RSVD High = Mobile Yonah processor

7 MCH_CFG_9 — 1 — 30MIL TP81

MCH_CFG_9 (PCIE Graphics Lane)	Low = Reverse Lane High = Normal operation

For layout convenience

7 MCH_CFG_10 — 1 — 30MIL TP82

MCH_CFG_10 (HOST PLL VCC SELECT)	Low = RESERVED High = MOBILITY

7 MCH_CFG_11

MCH_CFG_11 (PSB 4x CLK ENABLE)	Low = Calistoga High = Reserved

R93
NC_2.2K_J
0402

7 MCH_CFG_12 — 1 — 30MIL TP84
7 MCH_CFG_13 — 1 — 30MIL TP85

MCH_CFG_[13:12] (XOR/ALLZ)	00=Partial Clock Gating Disable 01=XOR Mode Enable 10=All-Z Mode Enable 11=Normal Operation(Default)

7 MCH_CFG_16 — 1 — 30MIL TP160

MCH_CFG_16 (FSB Dynamic ODT)	Low = Dynamic ODT Disabled High = Dynamic ODT Enable

MCH_CFG_18 (VCC_CORE Select)	Low = 1.05V(default) High = 1.5V

7 MCH_CFG_18 — 1 — 30MIL TP79

MCH_CFG_19 (DMI LANE REVERSAL)	Low = Normal(default) High = LANES REVERSED

7 MCH_CFG_19 — 1 — 30MIL TP80

MCH_CFG_20 (PCIe Backward Interpoerability mode)	Low = Only SDVO or PCIE x1 is operational (defaults)) High = SDVO and PCIE x1 are operating simultaneously via the PEG port

7 MCH_CFG_20 — 1 — 30MIL TP83

Layout Noe:
Location of all MCH_CFG strap resistors needs to be close to trace to minimize stub

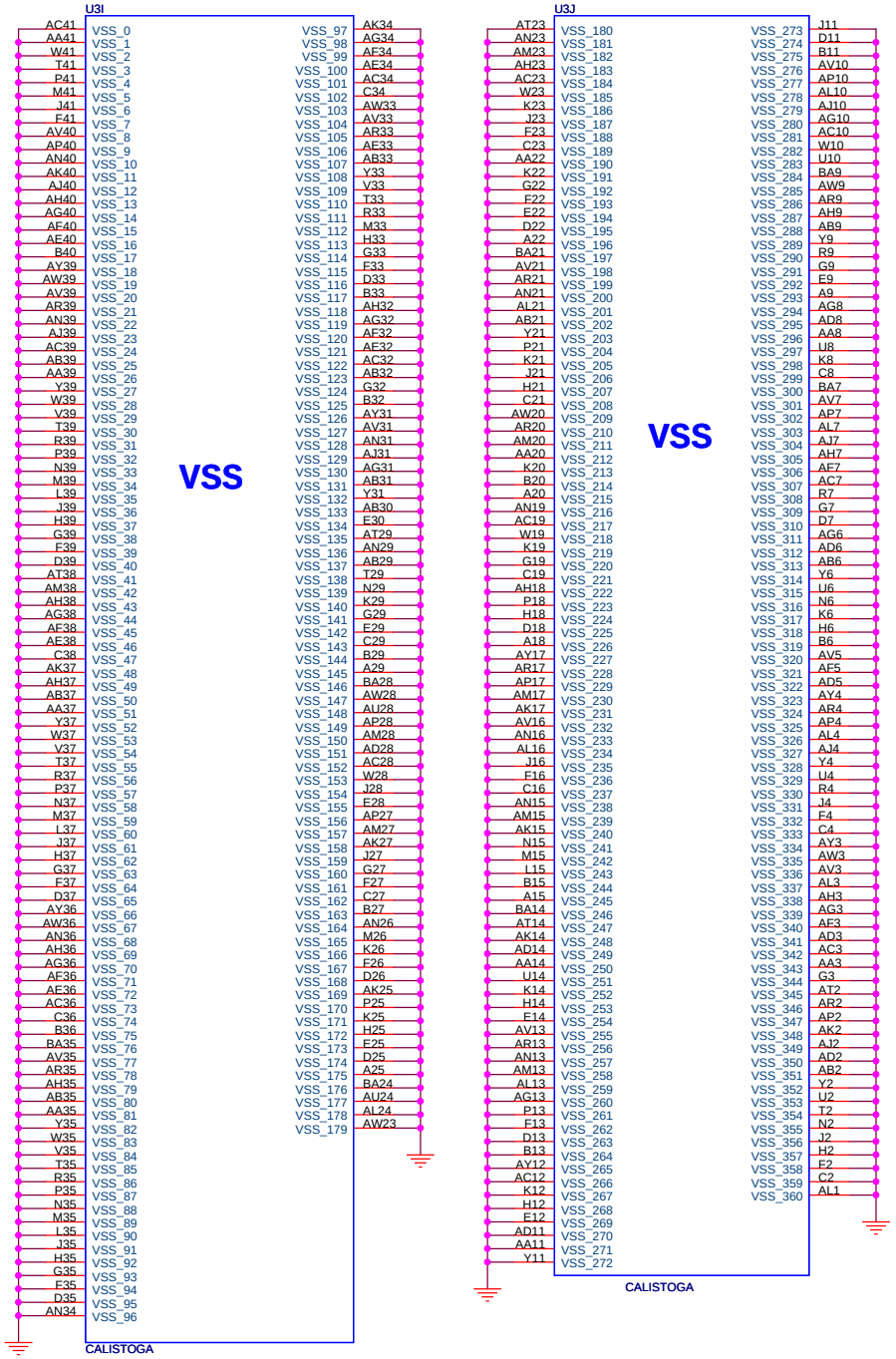

FOXCONN
HON HAI Precision Ind. Co., Ltd.
CCPBG - R&D Division

Title	CALISTOGA(VSS) 7 of 7	
Size A3	Document Number MS70-1-01	Rev 2.0
Date: Tuesday, August 22, 2006	Sheet 12 of 55	

www.vinafix.vn

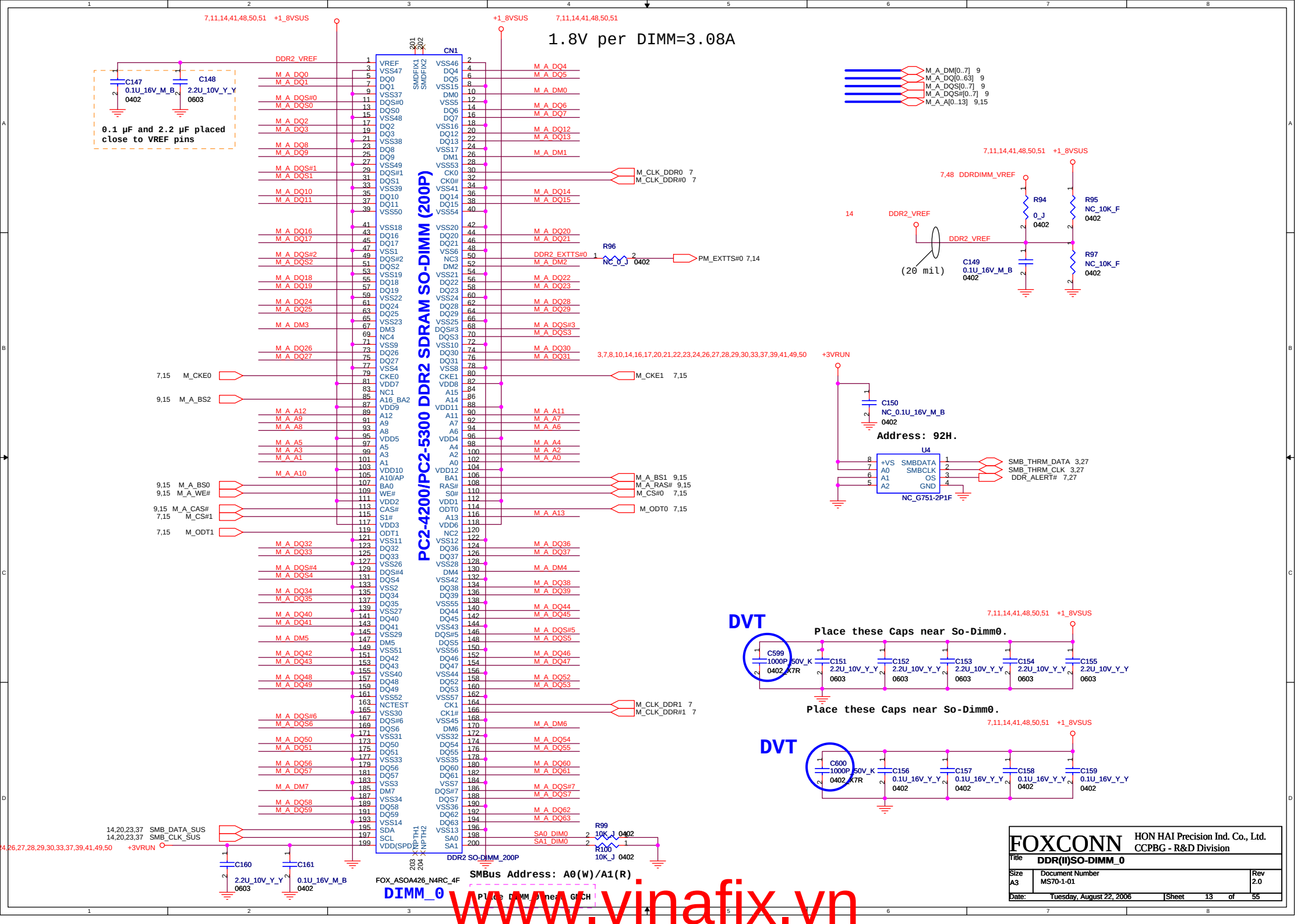

www.vinafix.vn

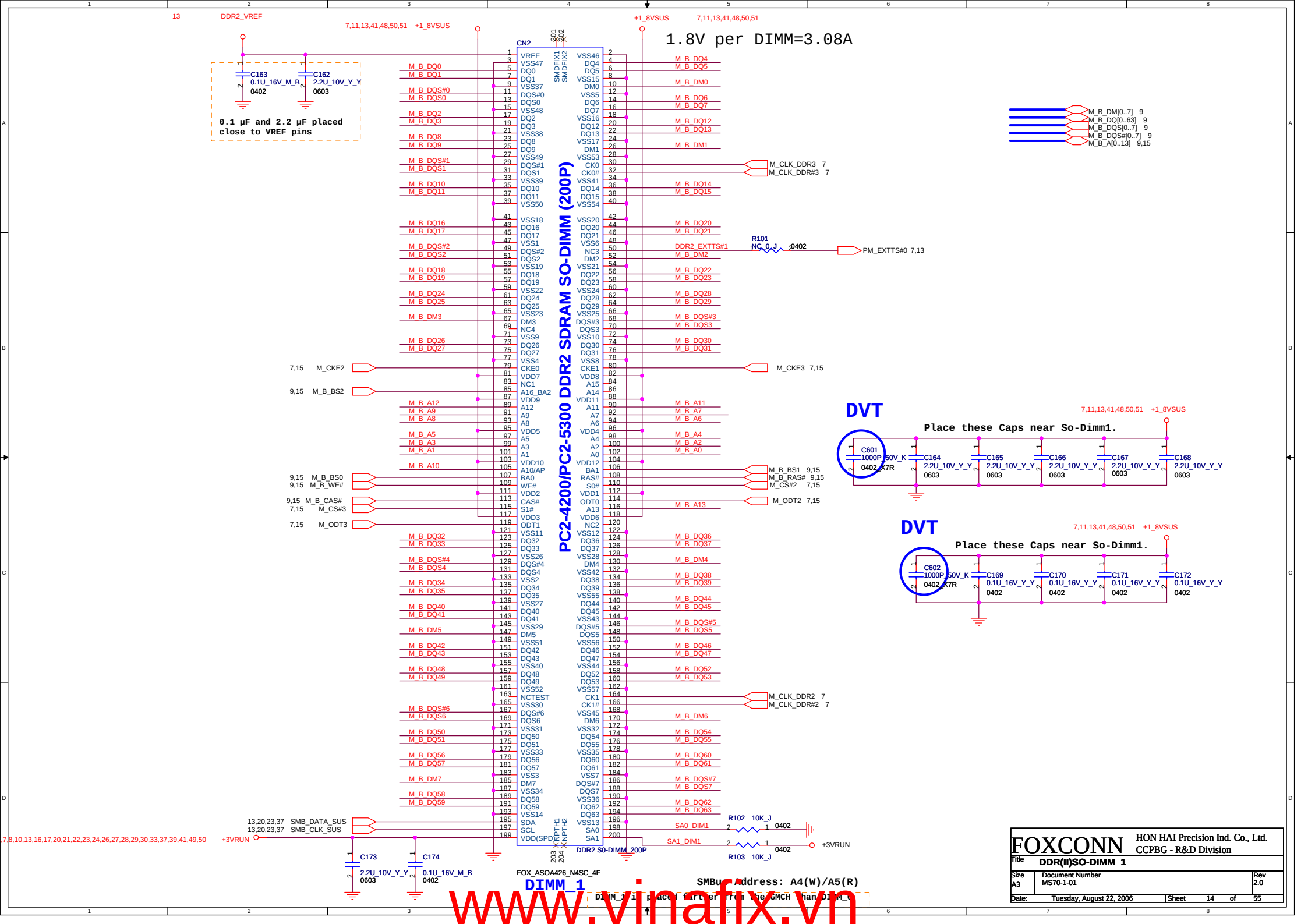
1.8V per DIMM=3.08A
CN2
PC2-4200/PC2-5300 DDR2 SDRAM SO-DIMM (200P)
DDR2 S0-DIMM_200P
FOX_ASOA426_N4SC_4F
DIMM_1
0.1 µF and 2.2 µF placed close to VREF pins
DDR2_VREF
+1_8VSUS
+3VRUN
DVT
Place these Caps near So-Dimm1.
SMBus Address: A4(W)/A5(R)
DIMM_1 is placed farther from the GMCH than DIMM_0
www.vinafix.vn
FOXCONN
HON HAI Precision Ind. Co., Ltd.
CCPBG - R&D Division
Title DDR(II)SO-DIMM_1
Size A3
Document Number MS70-1-01
Rev 2.0
Date: Tuesday, August 22, 2006
Sheet 14 of 55

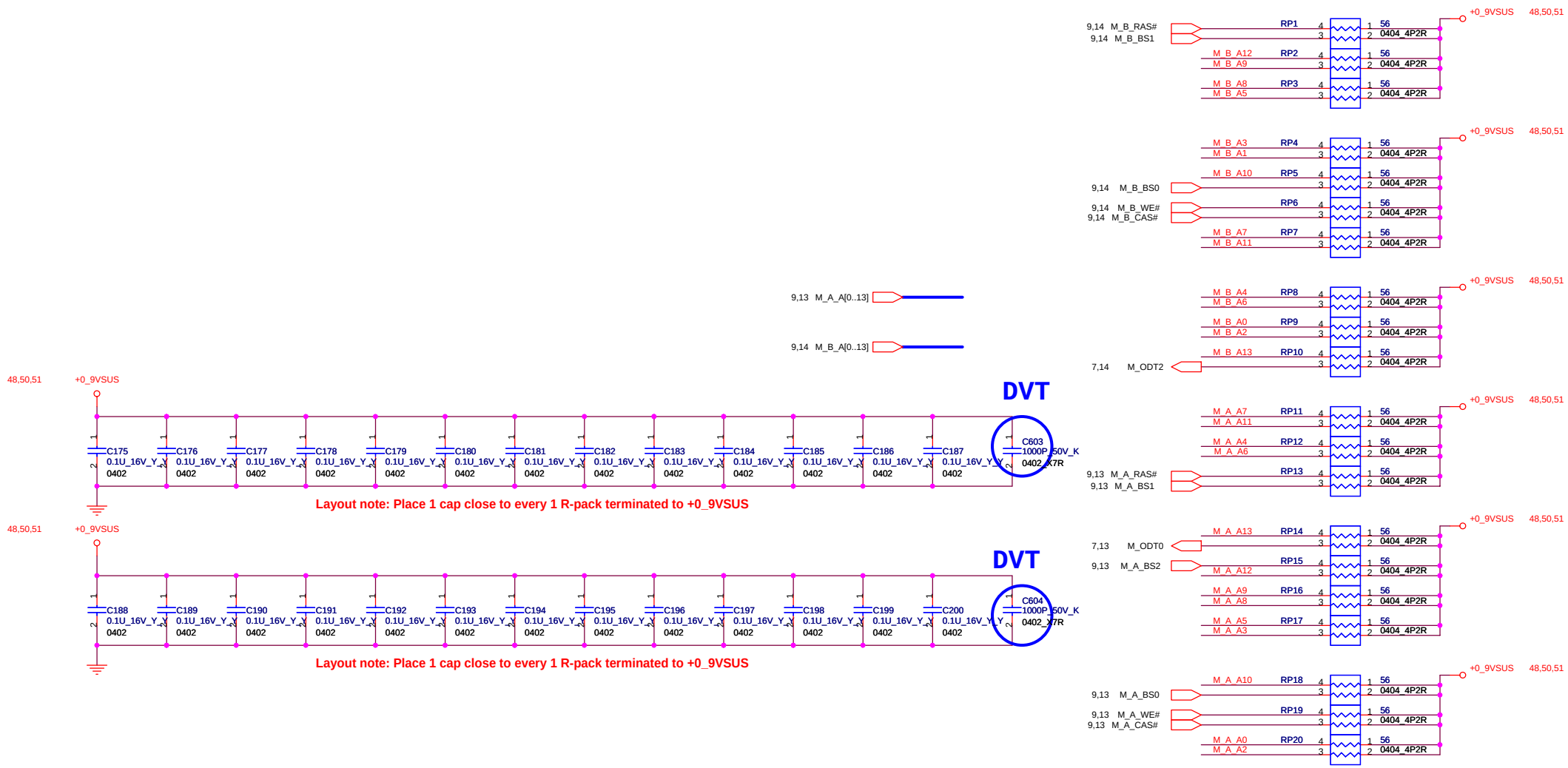

FOXCONN	HON HAI Precision Ind. Co., Ltd. CCPBG - R&D Division	
Title	DDR(II)Termination	
Size A3	Document Number MS70-1-01	Rev 2.0
Date: Tuesday, August 22, 2006	Sheet 15 of 55	

www.vinafix.vn

LVDS

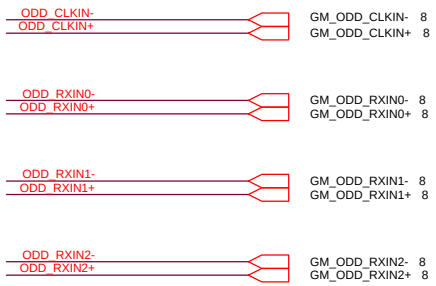

LVDS CONNECTOR

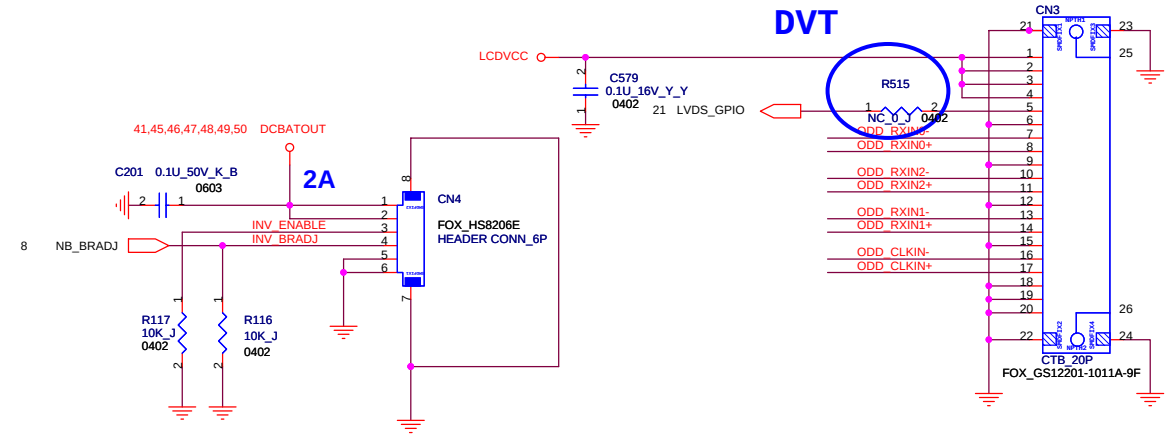

INVERTER CONNECTOR

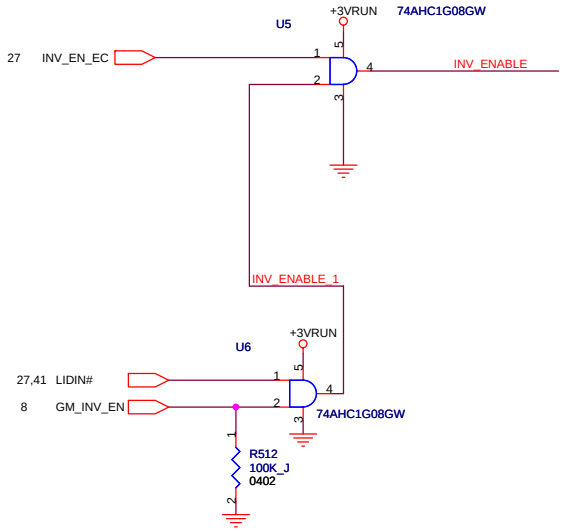

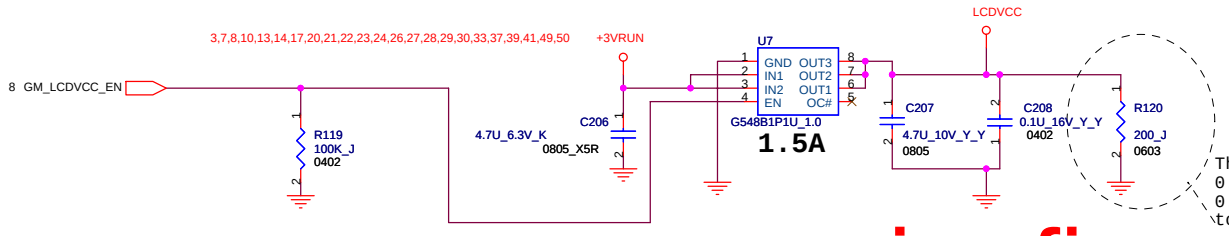

DISCHARGE

The R461 will consume about 0.054 Watt (3.3x3.3/200 = 0.054W). We changed resistor to 0603 size (1/8 Watt)

PANEL ID

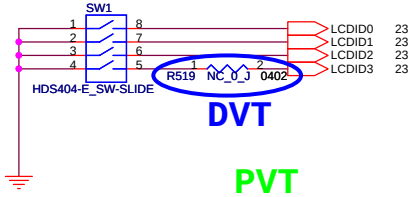

Type	WXGA	WXGA	WSXGA
Size	15.4" wide	15.4" wide	15.4" wide
Vender	CPT	QDI	InnoLux
Device Name	CLAA154WA05AN	QDI15TL0703	TBD
Panel ID Check[3:0]	1001	1010	1011

ON=0

FOXCONN	HON HAI Precision Ind. Co., Ltd. CCPBG - R&D Division	
Title	LVDS	
Size A3	Document Number MS70-1-01	Rev 2.0
Date: Tuesday, August 22, 2006	Sheet 16 of 55	

www.vinafix.vn

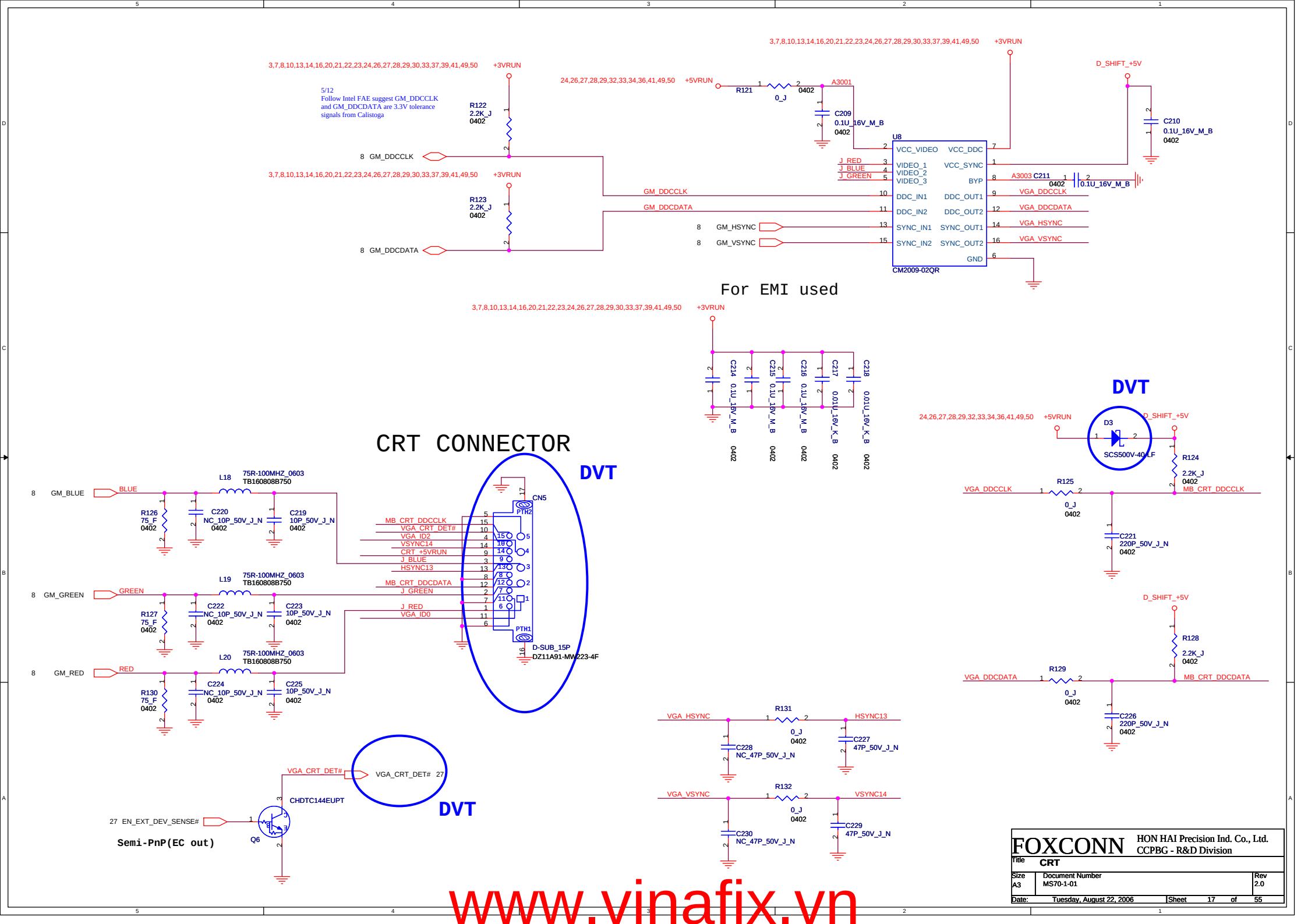

www.vinafix.vn

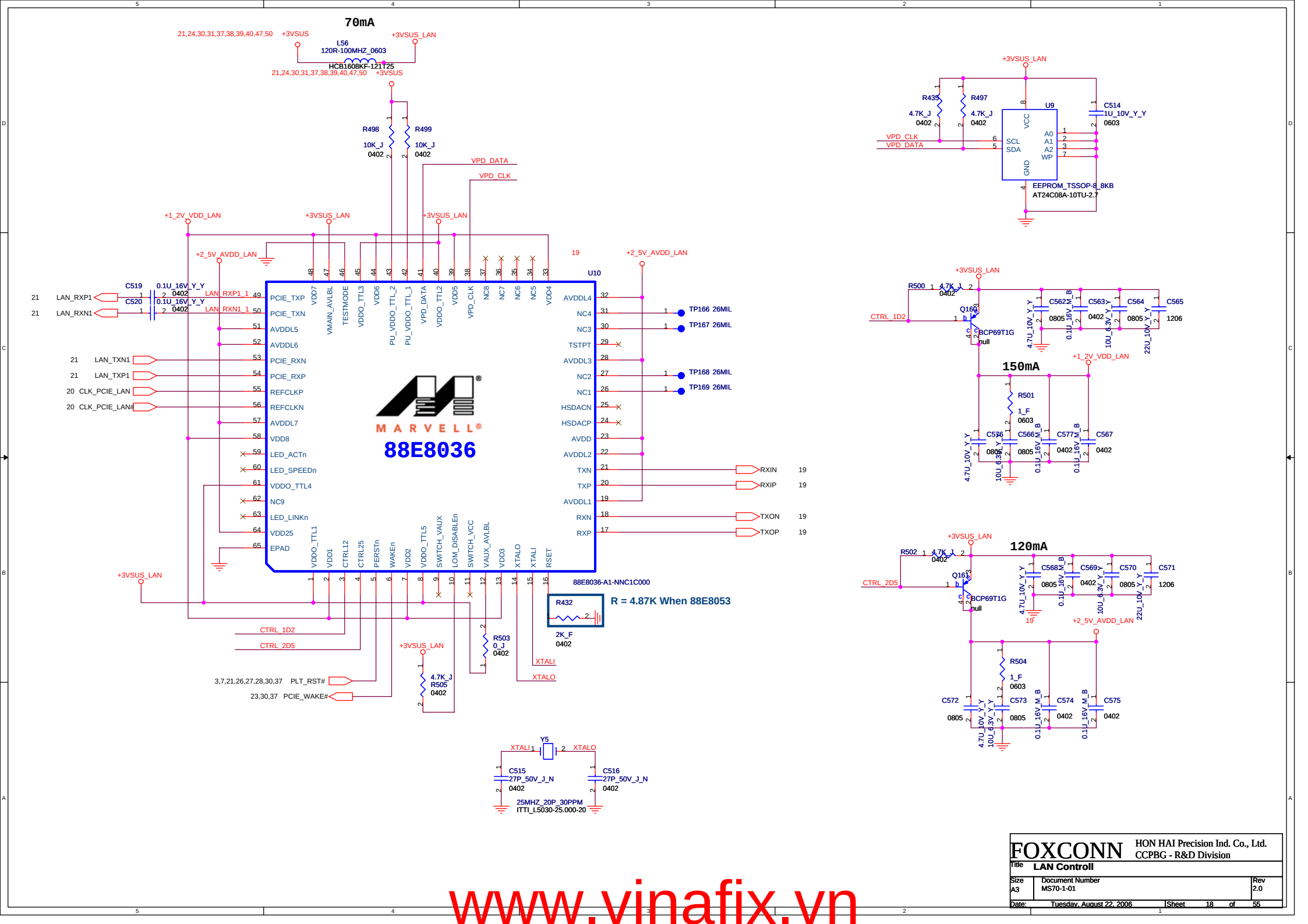

FOXCONN HON HAI Precision Ind. Co., Ltd. CCPBG - R&D Division

Title	LAN Controll	
Size A3	Document Number MS70-1-01	Rev 2.0
Date: Tuesday, August 22, 2006	Sheet 18 of 55	

www.vinafix.vn

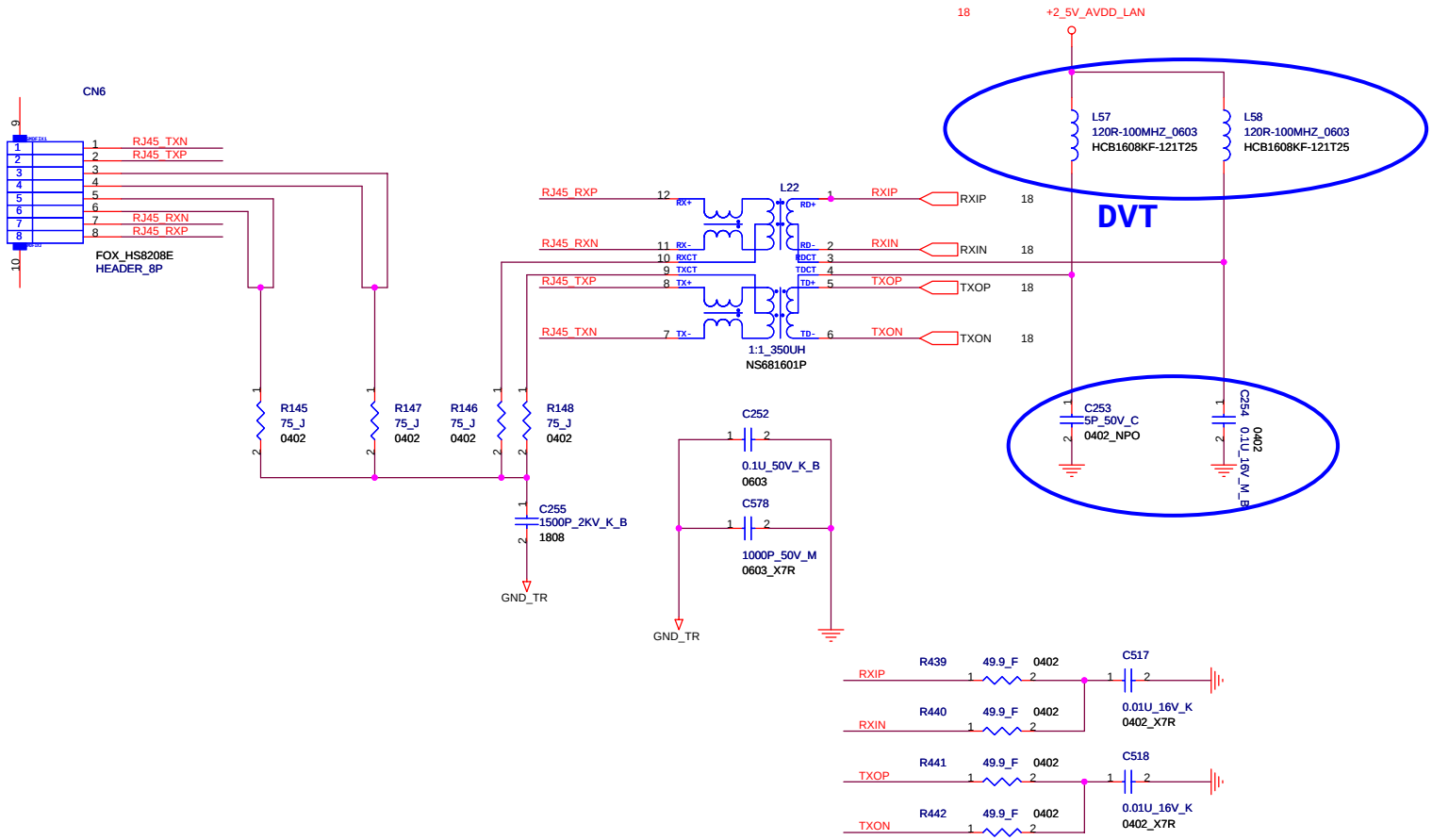

FOXCONN	HON HAI Precision Ind. Co., Ltd. CCPBG - R&D Division	
Title	LAN Transformer	
Size A3	Document Number MS70-1-01	Rev 2.0
Date: Tuesday, August 22, 2006	Sheet 19 of 55	

www.vinafix.vn

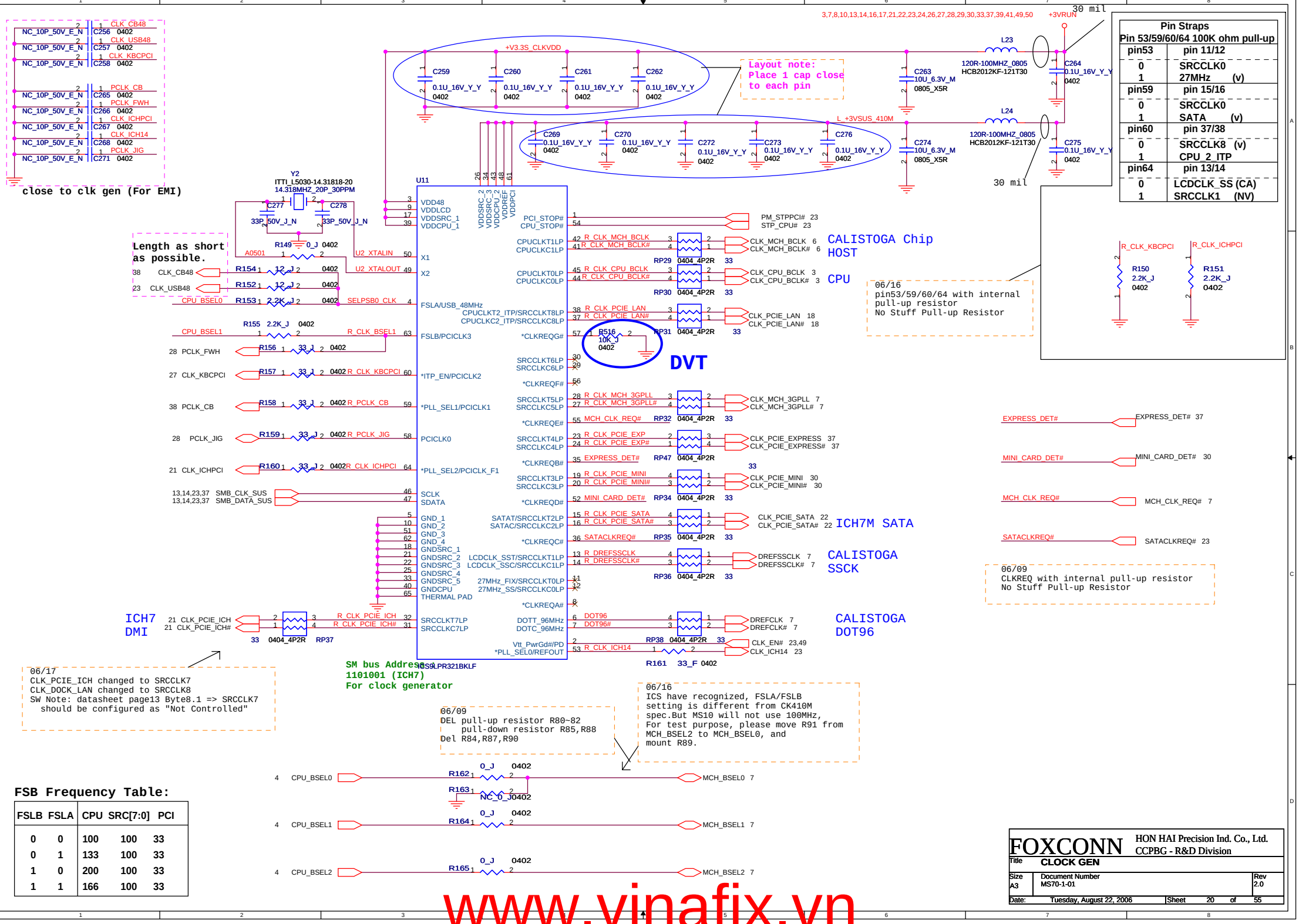

FSLB	FSLA	CPU	SRC[7:0]	PCI
0	0	100	100	33
0	1	133	100	33
1	0	200	100	33
1	1	166	100	33

www.vinafix.vn

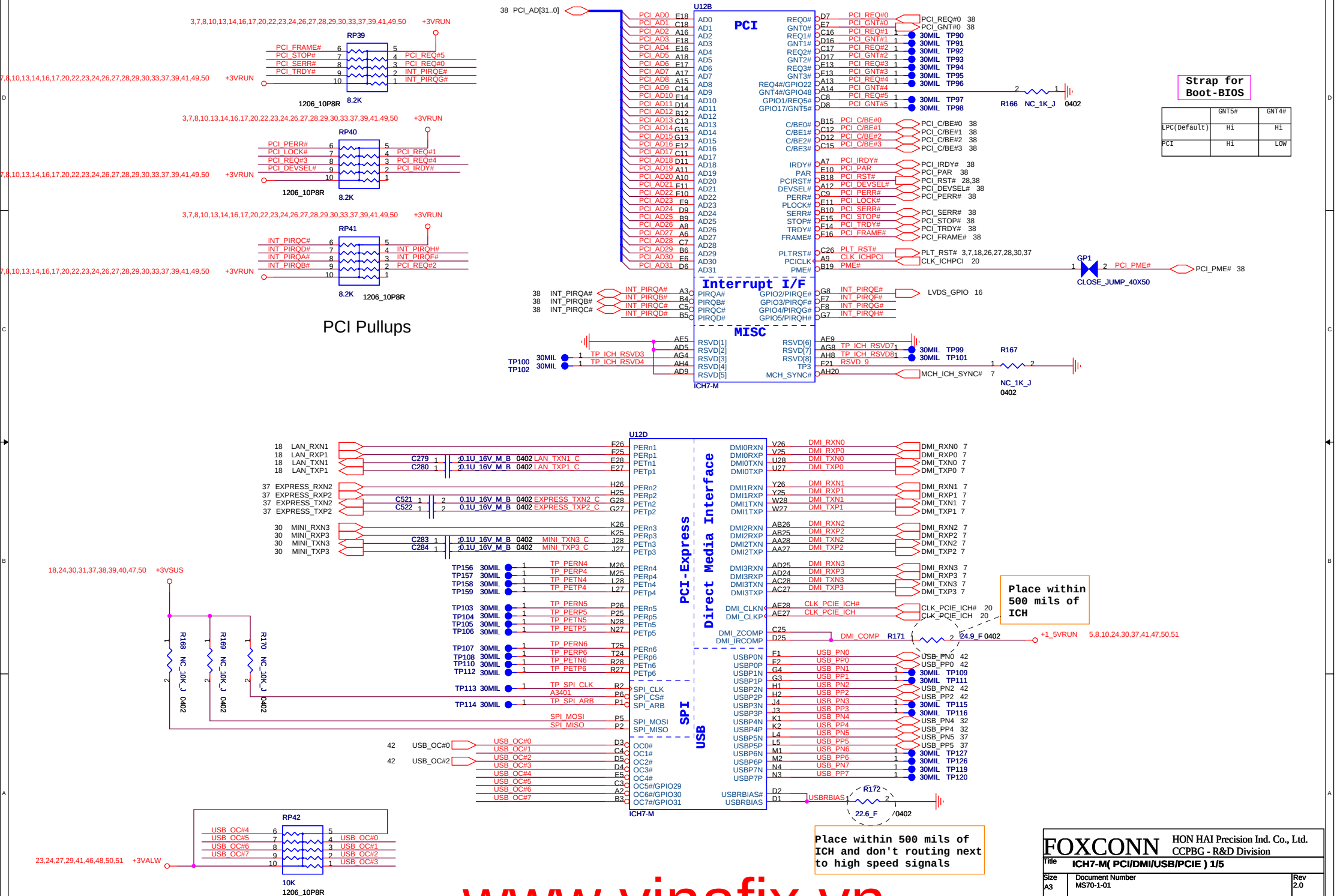

www.vinafix.vn

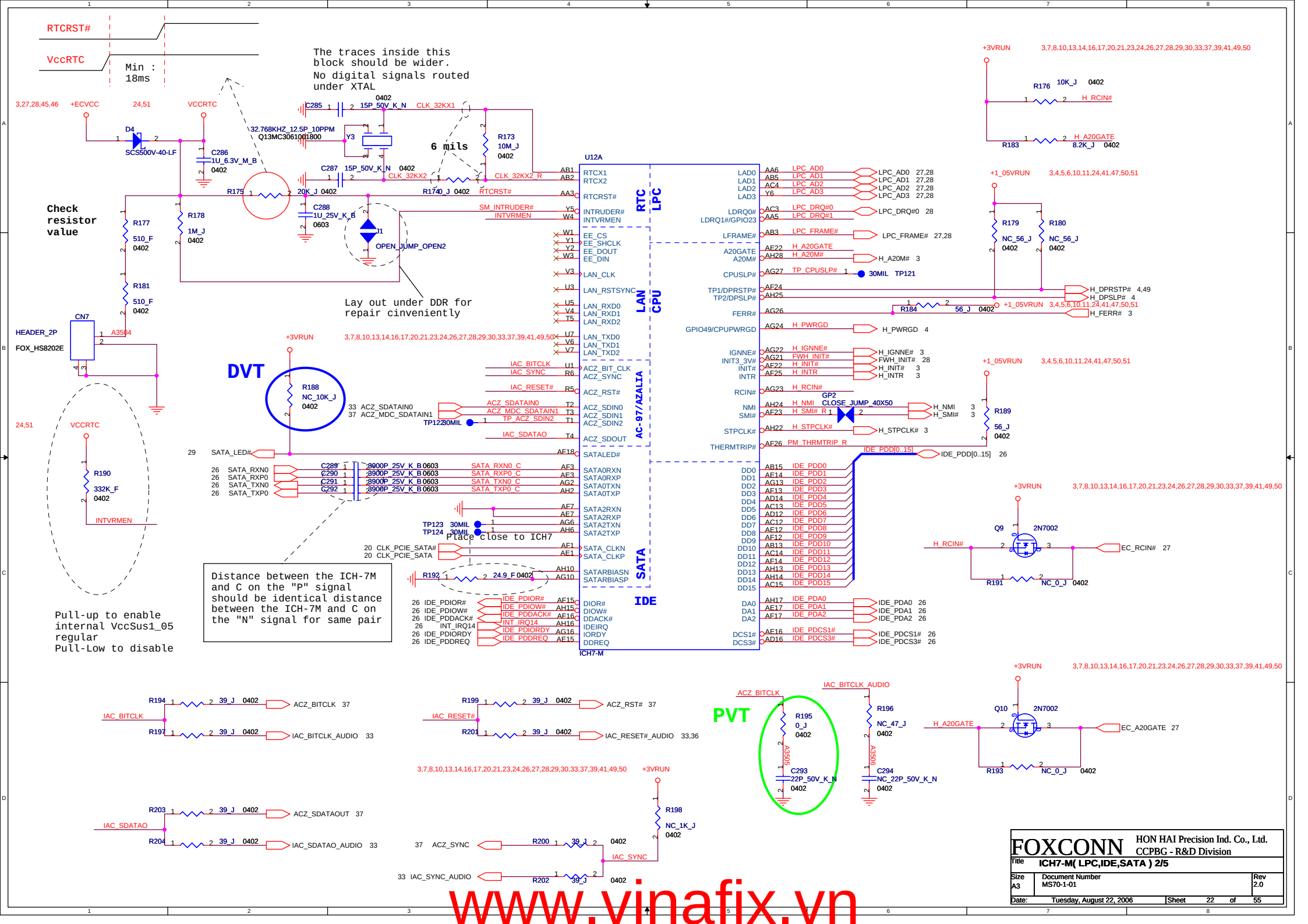
RTCRST#
VccRTC
Min : 18ms
The traces inside this block should be wider.
No digital signals routed under XTAL
Check resistor value
Lay out under DDR for repair cinveniently
DVT
PVT
Place close to ICH7
Distance between the ICH-7M and C on the "P" signal should be identical distance between the ICH-7M and C on the "N" signal for same pair
Pull-up to enable internal VccSus1_05 regular
Pull-Low to disable
U12A
ICH7-M
RTC
LPC
LAN
CPU
AC-97/AZALIA
SATA
IDE
FOXCONN
HON HAI Precision Ind. Co., Ltd.
CCPBG - R&D Division
Title ICH7-M(LPC,IDE,SATA) 2/5
Size A3
Document Number MS70-1-01
Rev 2.0
Date: Tuesday, August 22, 2006
Sheet 22 of 55
www.vinafix.vn

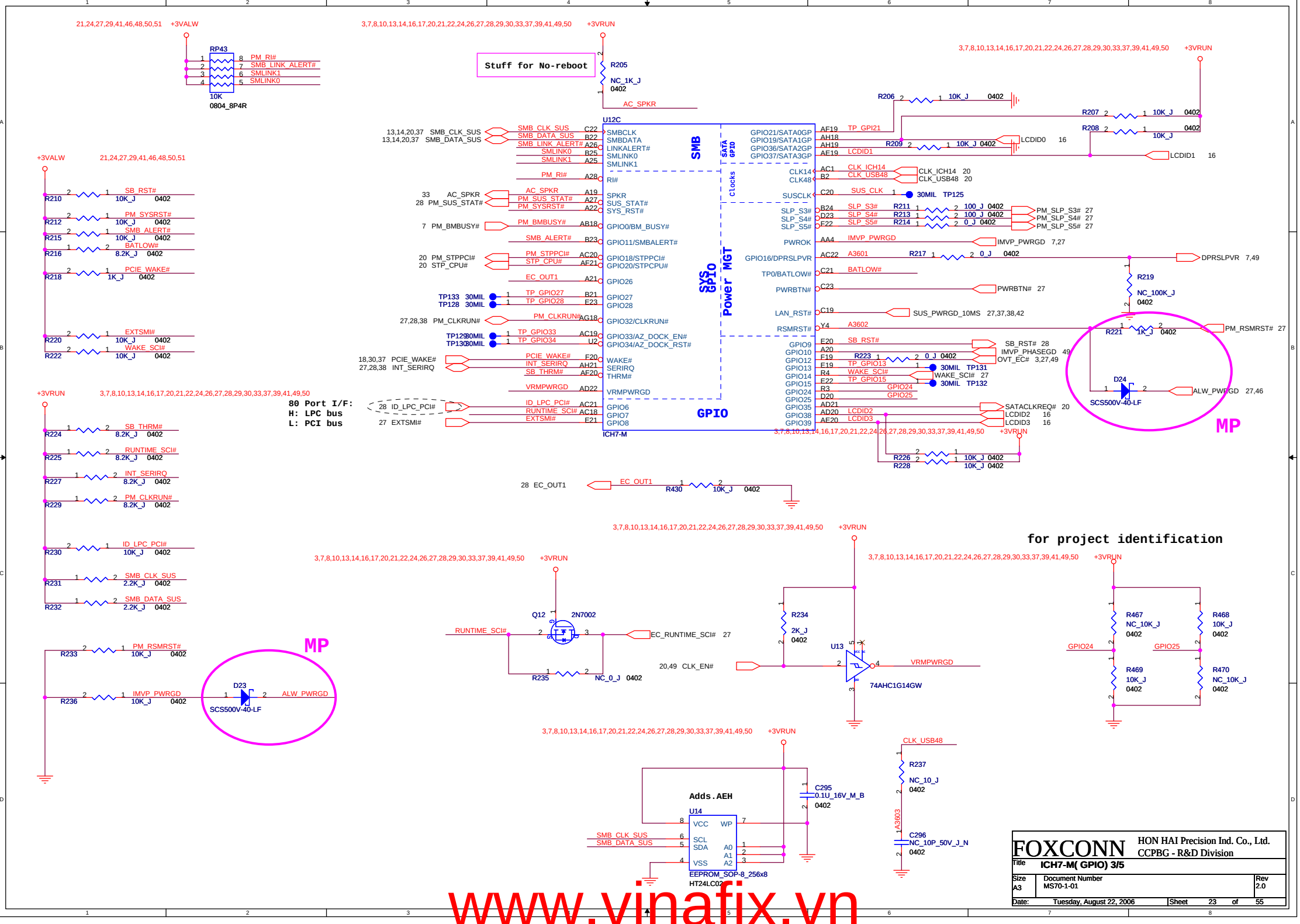

www.vinafix.vn

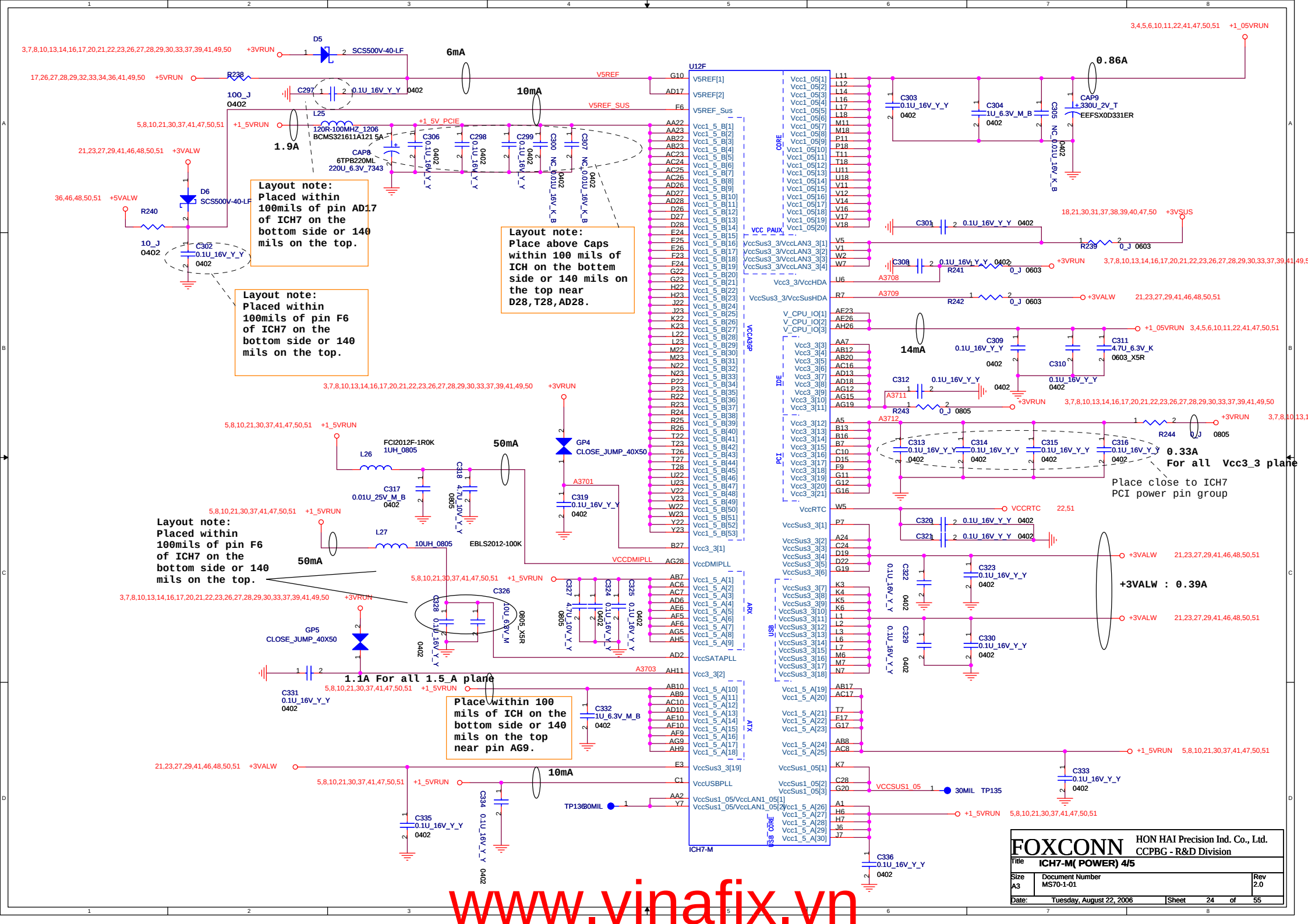

www.vinafix.vn

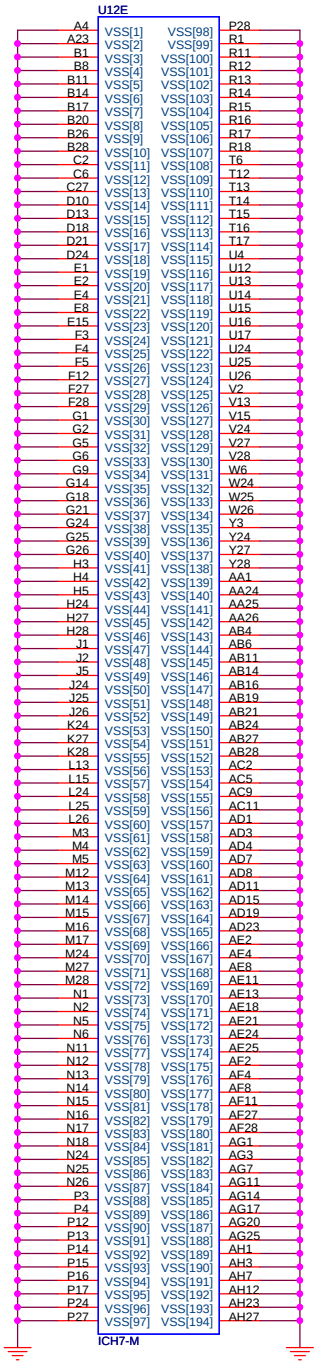

www.vinafix.vn

FOXCONN	HON HAI Precision Ind. Co., Ltd. CCPBG - R&D Division	
Title	ICH7-M(GND) 5/5	
Size A3	Document Number MS70-1-01	Rev 2.0
Date: Tuesday, August 22, 2006	Sheet 25 of 55	

SATA HDD CONN

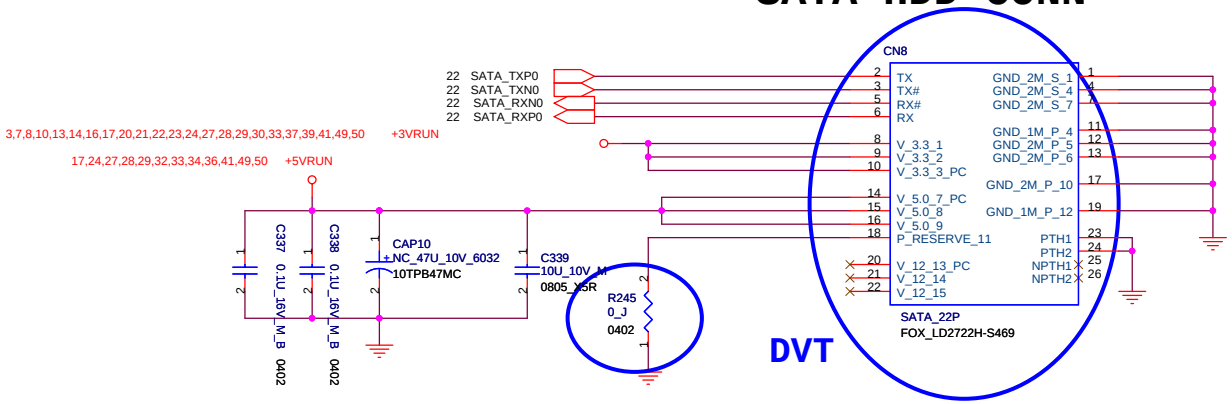

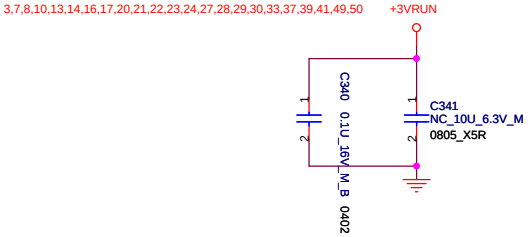

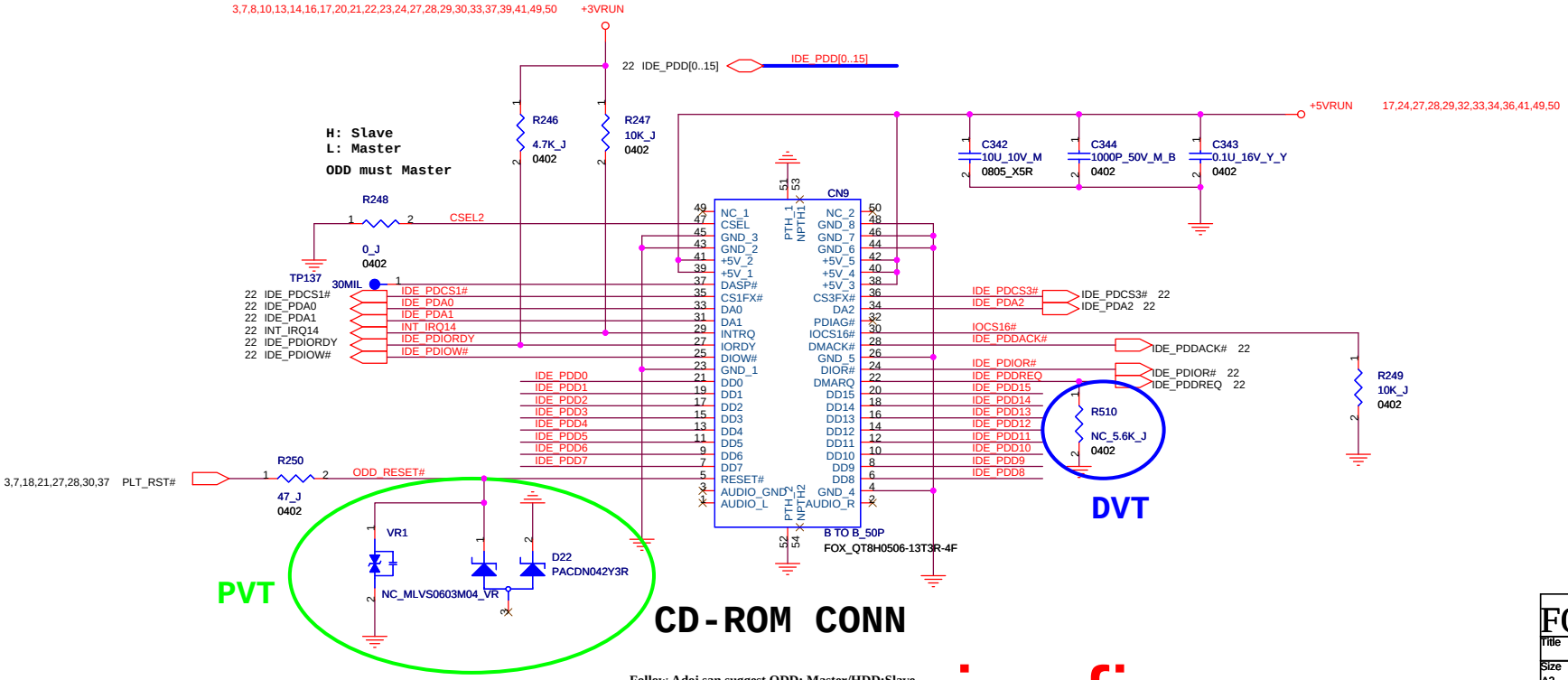

CD-ROM CONN

Follow Adoi san suggest ODD: Master/HDD:Slave

www.vinafix.vn

FOXCONN	HON HAI Precision Ind. Co., Ltd. CCPBG - R&D Division	
Title	SATA HDD/CD-ROM	
Size A3	Document Number MS70-1-01	Rev 2.0
Date: Tuesday, August 22, 2006	Sheet 26 of 55	

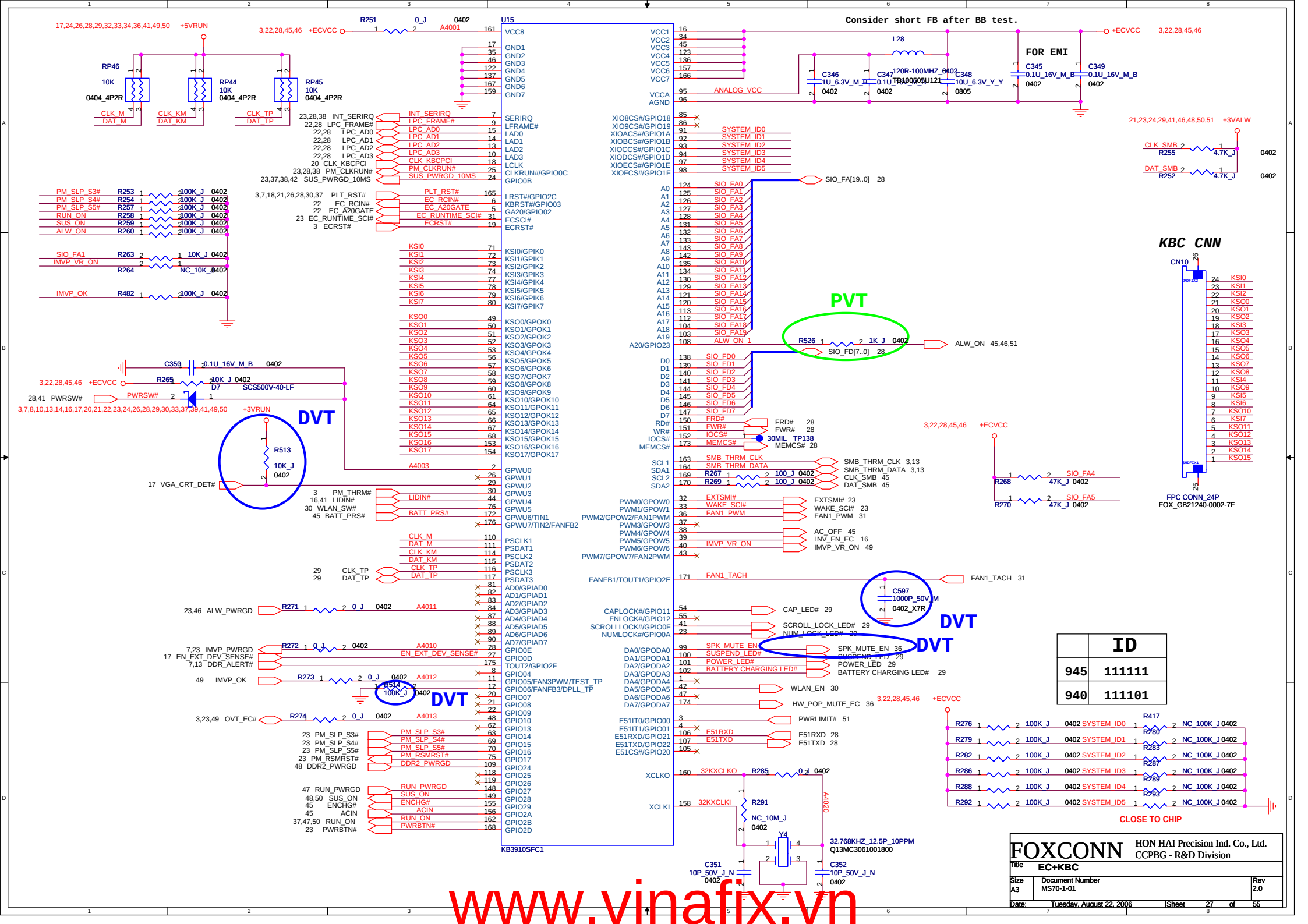

www.vinafix.vn

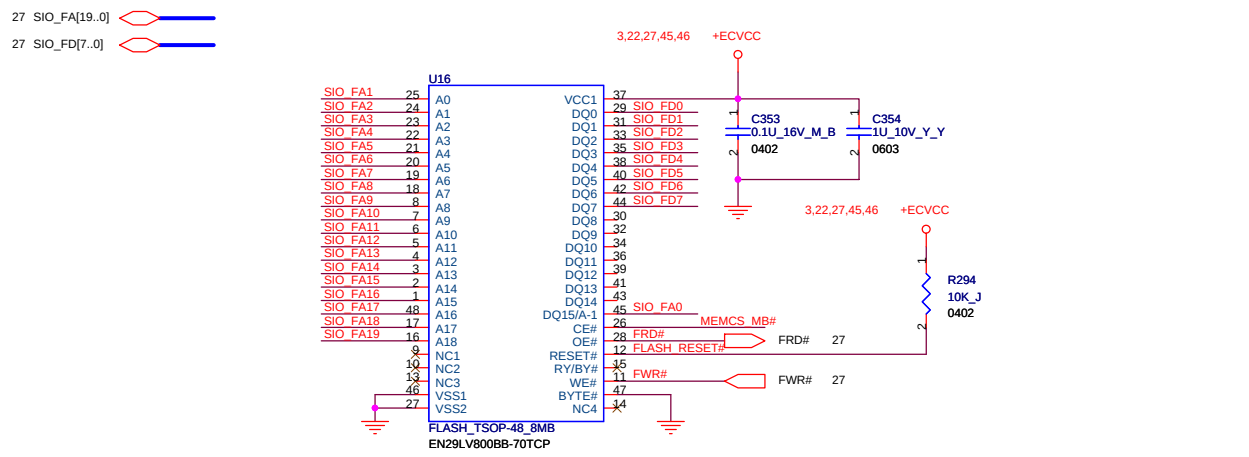

FLASH BIOS

JIG-120

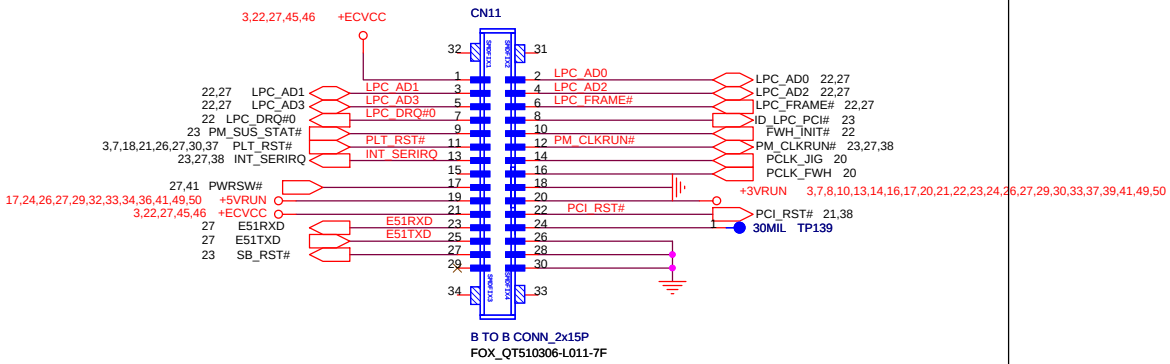

X-BUS

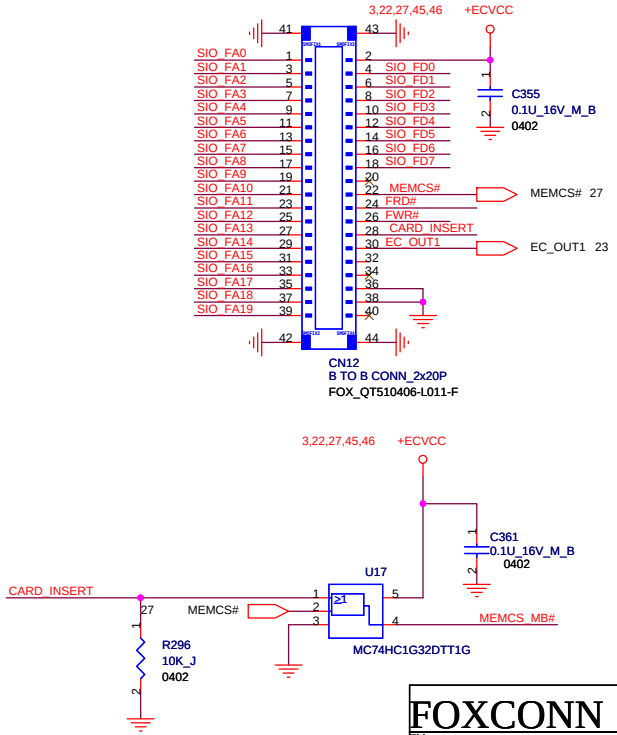

FOXCONN	HON HAI Precision Ind. Co., Ltd. CCPBG - R&D Division	
Title	Flash ROM/X-Bus/LID SW#	
Size A3	Document Number MS70-1-01	Rev 2.0
Date: Tuesday, August 22, 2006	Sheet 28 of 55	

www.vinafix.vn

Touch Pad Board

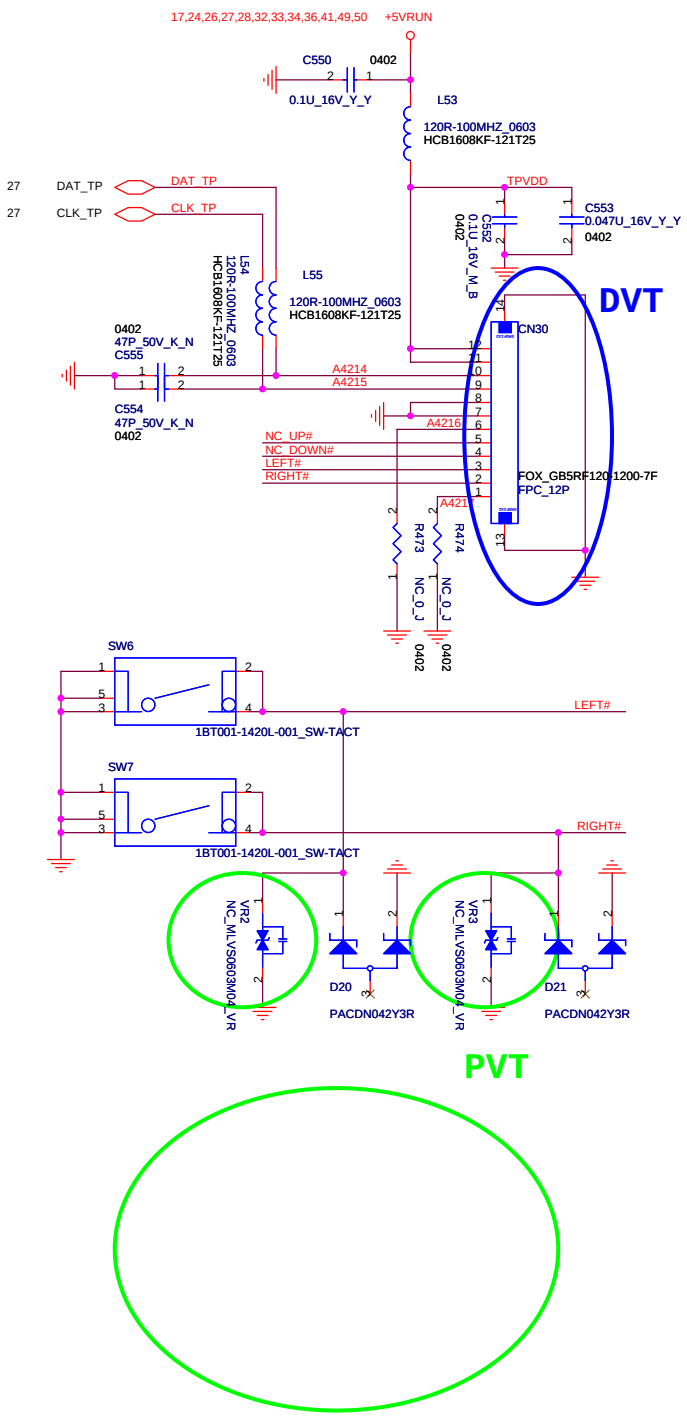

CAP_LED#
SCROLL_LOCK_LED#
NUM_LOCK_LED#

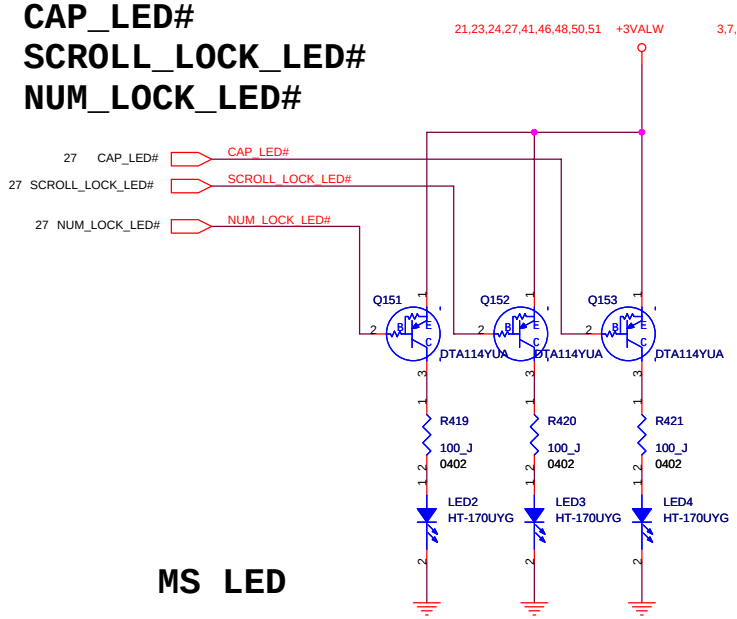

HDD_LED#

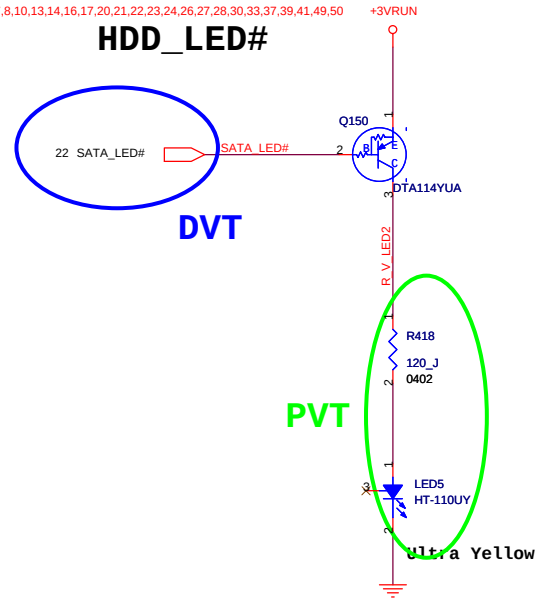

MS LED

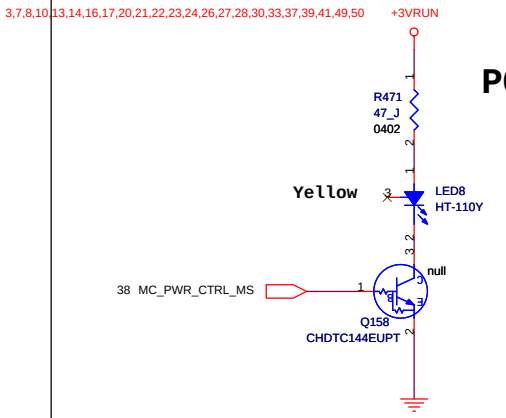

POWER/SUSPEND LED

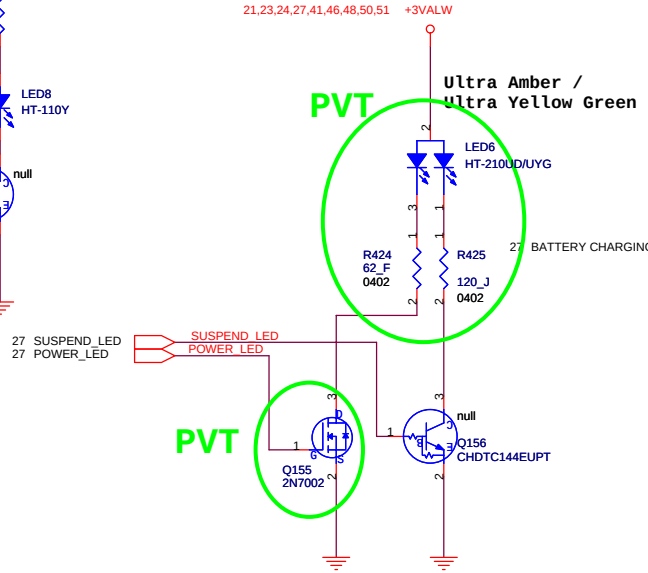

BATTERY CHARGING LED#

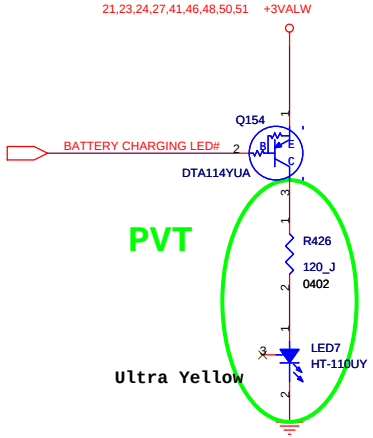

FOXCONN	HON HAI Precision Ind. Co., Ltd. CCPBG - R&D Division	
Title	LED/Touch PAD	
Size A3	Document Number MS70-1-01	Rev 2.0
Date: Tuesday, August 22, 2006	Sheet 29 of 55	

www.vinafix.vn

www.vinafix.vn

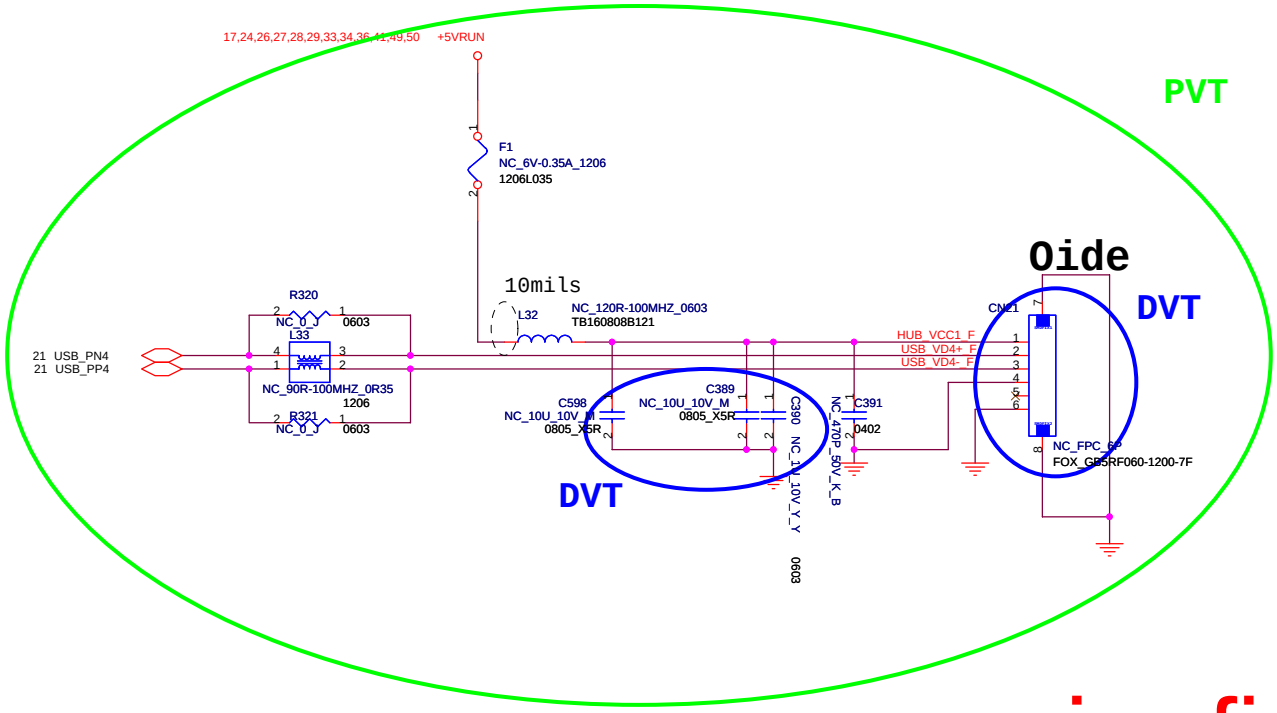

FOXCONN	HON HAI Precision Ind. Co., Ltd. CCPBG - R&D Division	
Title	OIDE	
Size A3	Document Number MS70-1-01	Rev 2.0
Date: Tuesday, August 22, 2006	Sheet 32 of 55	

www.vinafix.vn

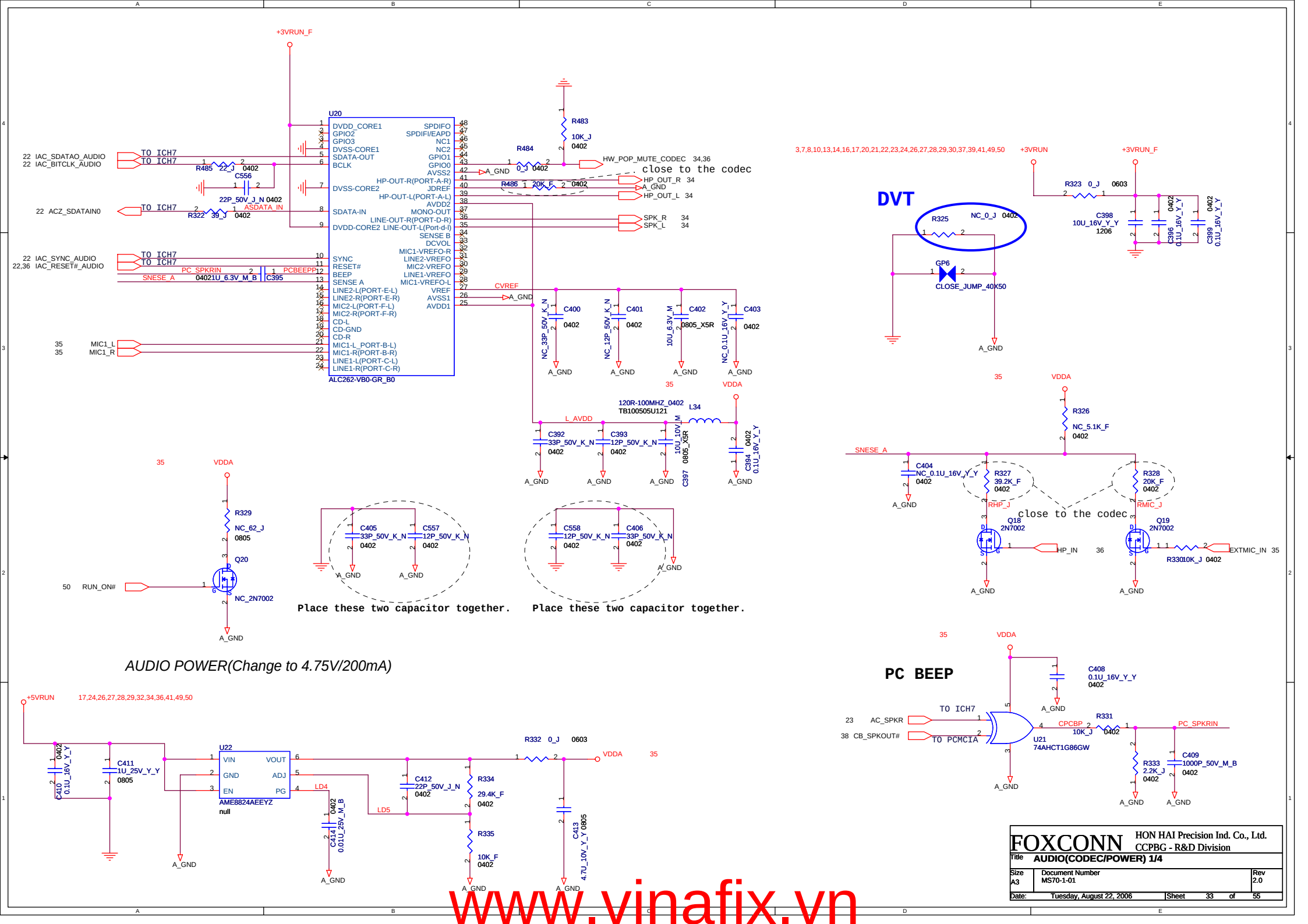

www.vinafix.vn

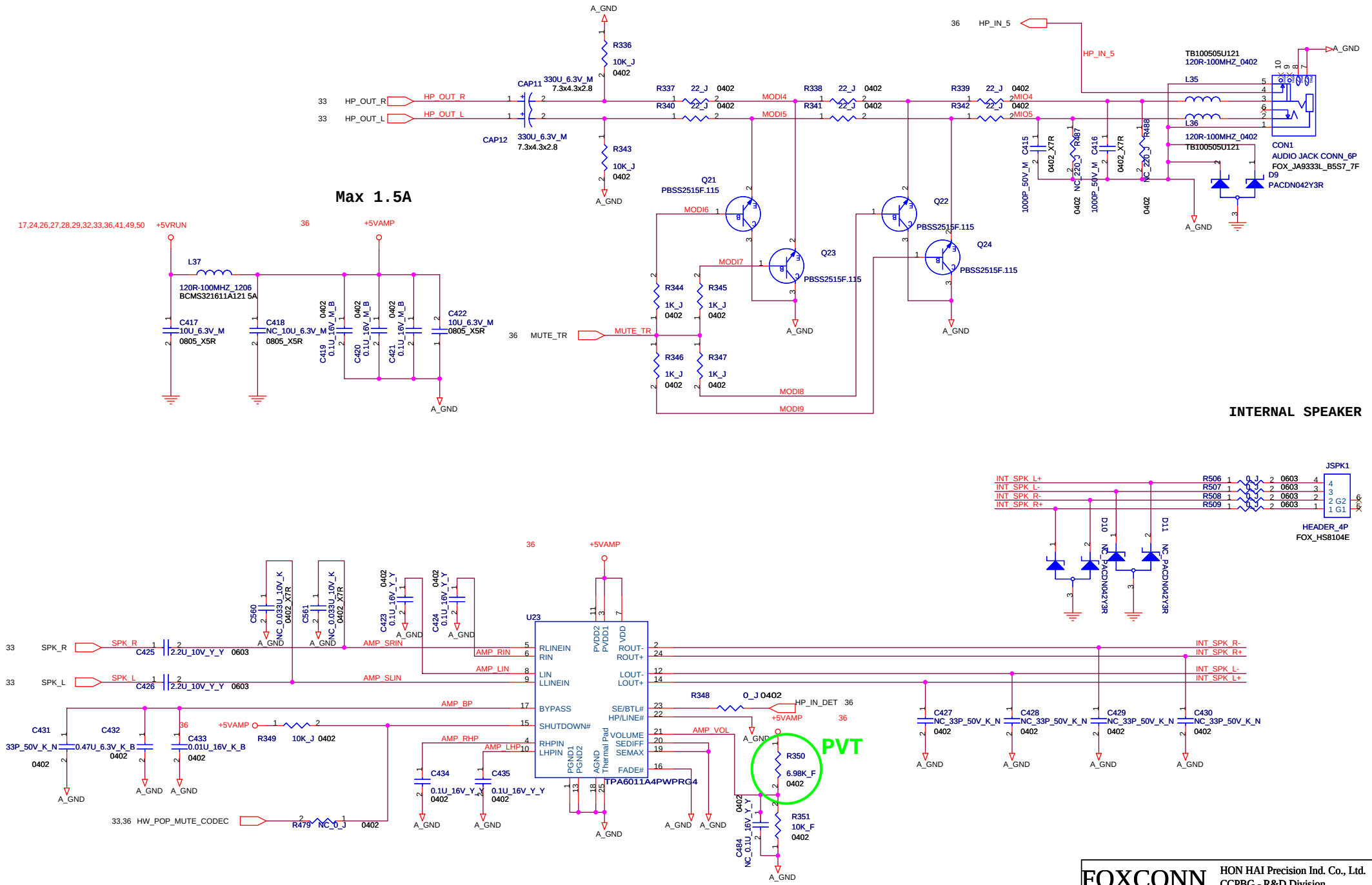

www.vinafix.vn

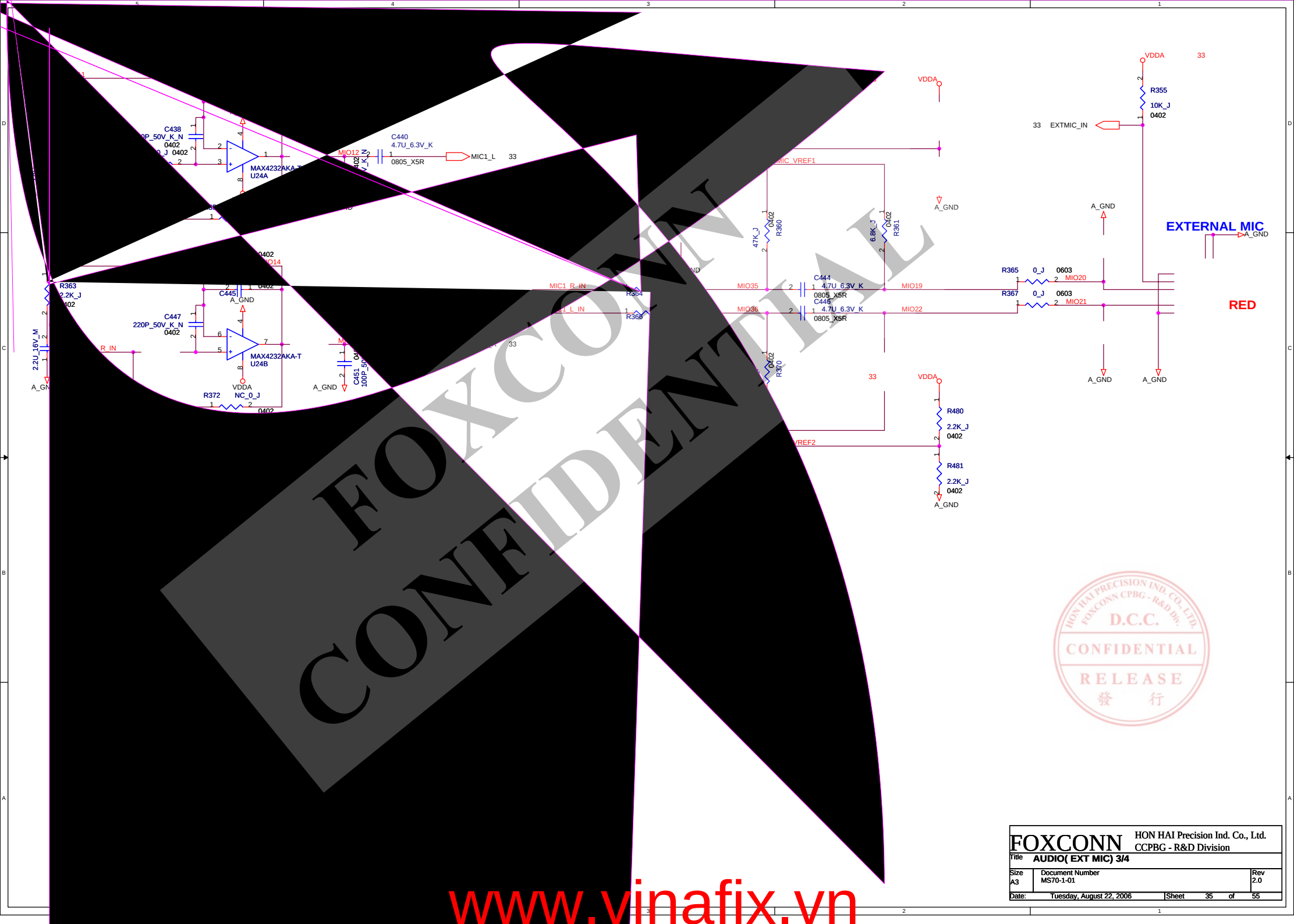

FOXCONN CONFIDENTIAL

HON HAI PRECISION IND. CO., LTD. FOXCONN CPBG - R&D Div. D.C.C. CONFIDENTIAL RELEASE 發 行

FOXCONN	HON HAI Precision Ind. Co., Ltd. CCPBG - R&D Division	
Title	AUDIO(EXT MIC) 3/4	
Size A3	Document Number MS70-1-01	Rev 2.0
Date: Tuesday, August 22, 2006	Sheet 35 of 55	

www.vinafix.vn

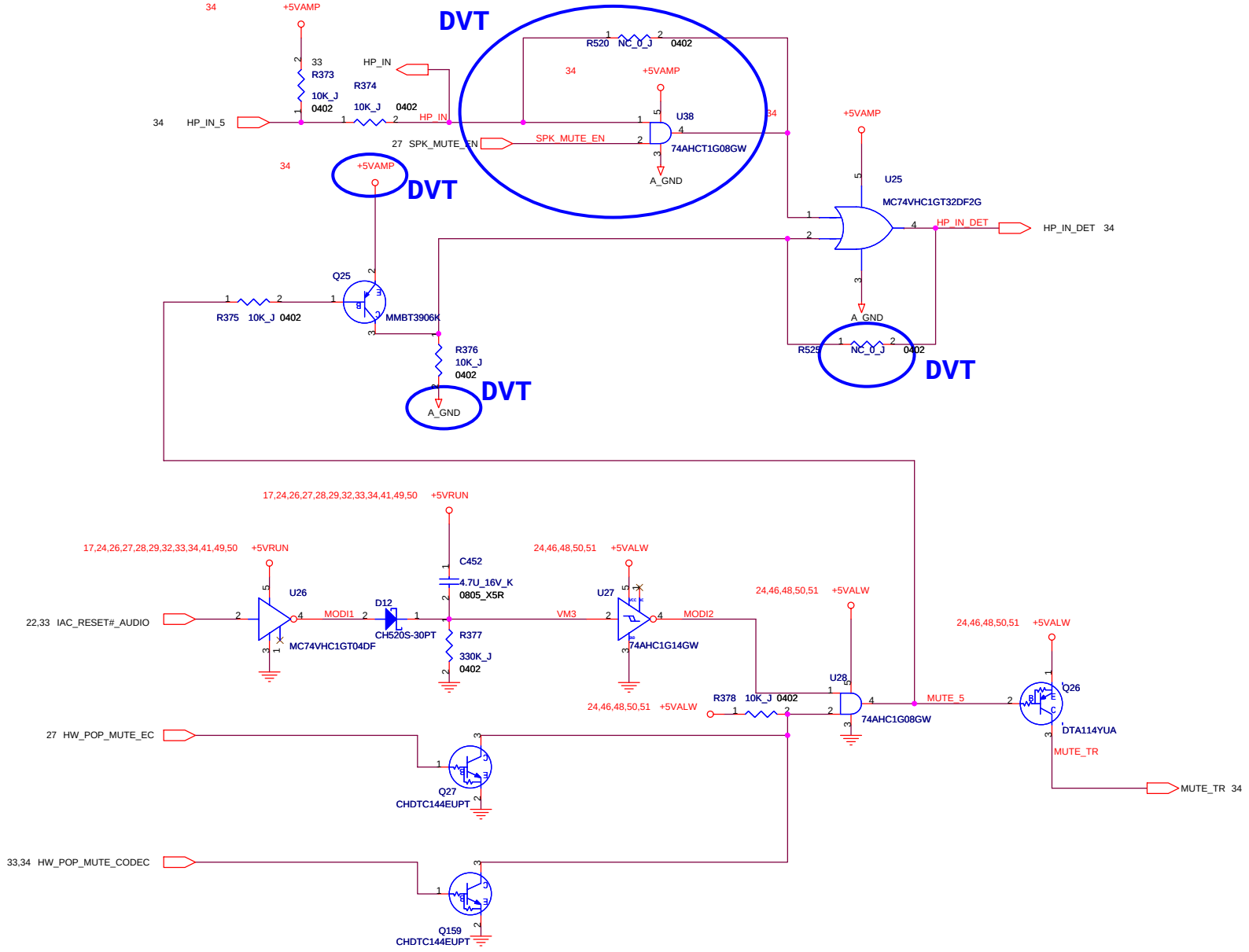

FOXCONN	HON HAI Precision Ind. Co., Ltd. CCPBG - R&D Division	
Title	AUDIO (MUTE) 4/4	
Size A3	Document Number MS70-1-01	Rev 2.0
Date: Tuesday, August 22, 2006	Sheet 36 of 55	

www.vinafix.vn

EXPRESS CONN

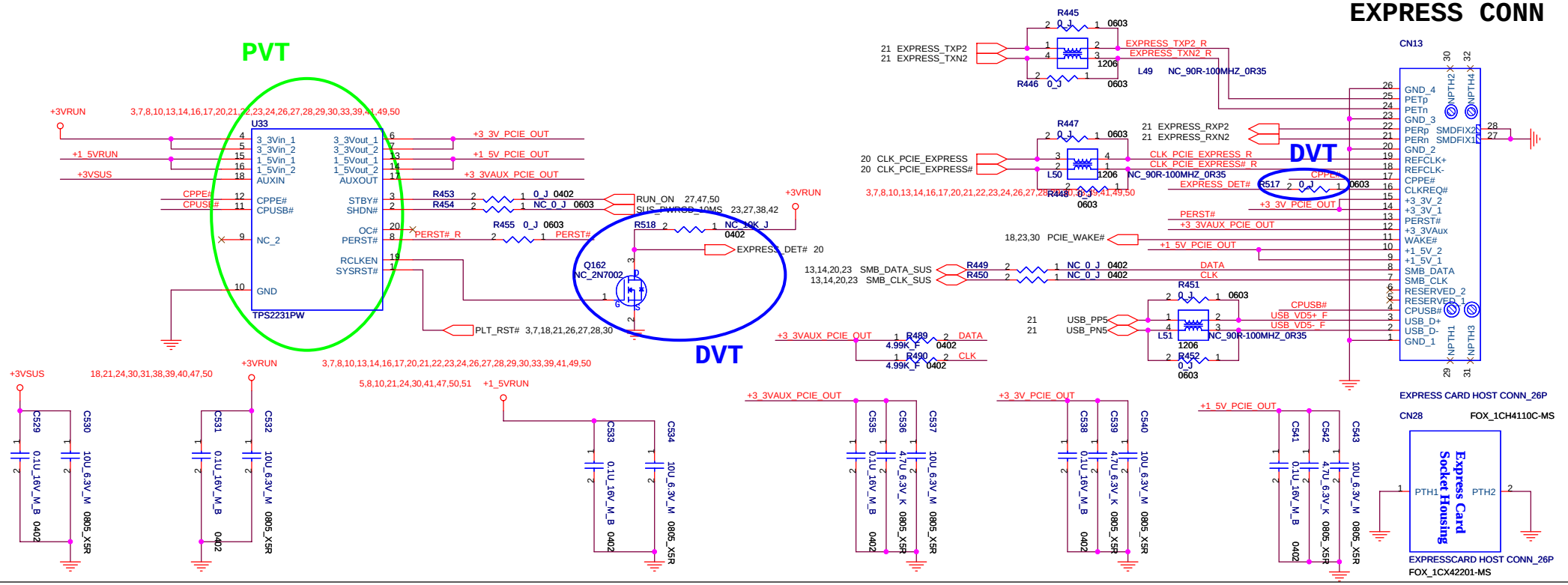

MDC CONN.

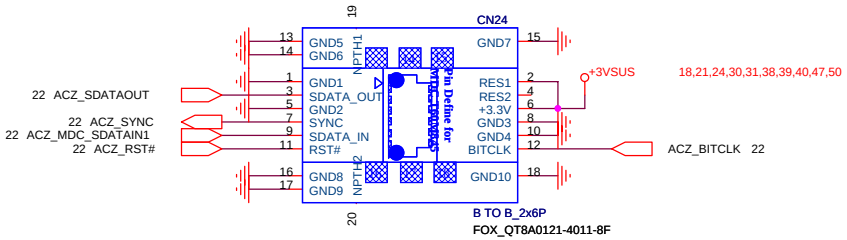

FOXCONN	HON HAI Precision Ind. Co., Ltd. CCPBG - R&D Division	
Title	EXPRESS CARD	
Size A3	Document Number MS70-1-01	Rev 2.0
Date: Tuesday, August 22, 2006	Sheet 37 of 55	

www.vinafix.vn

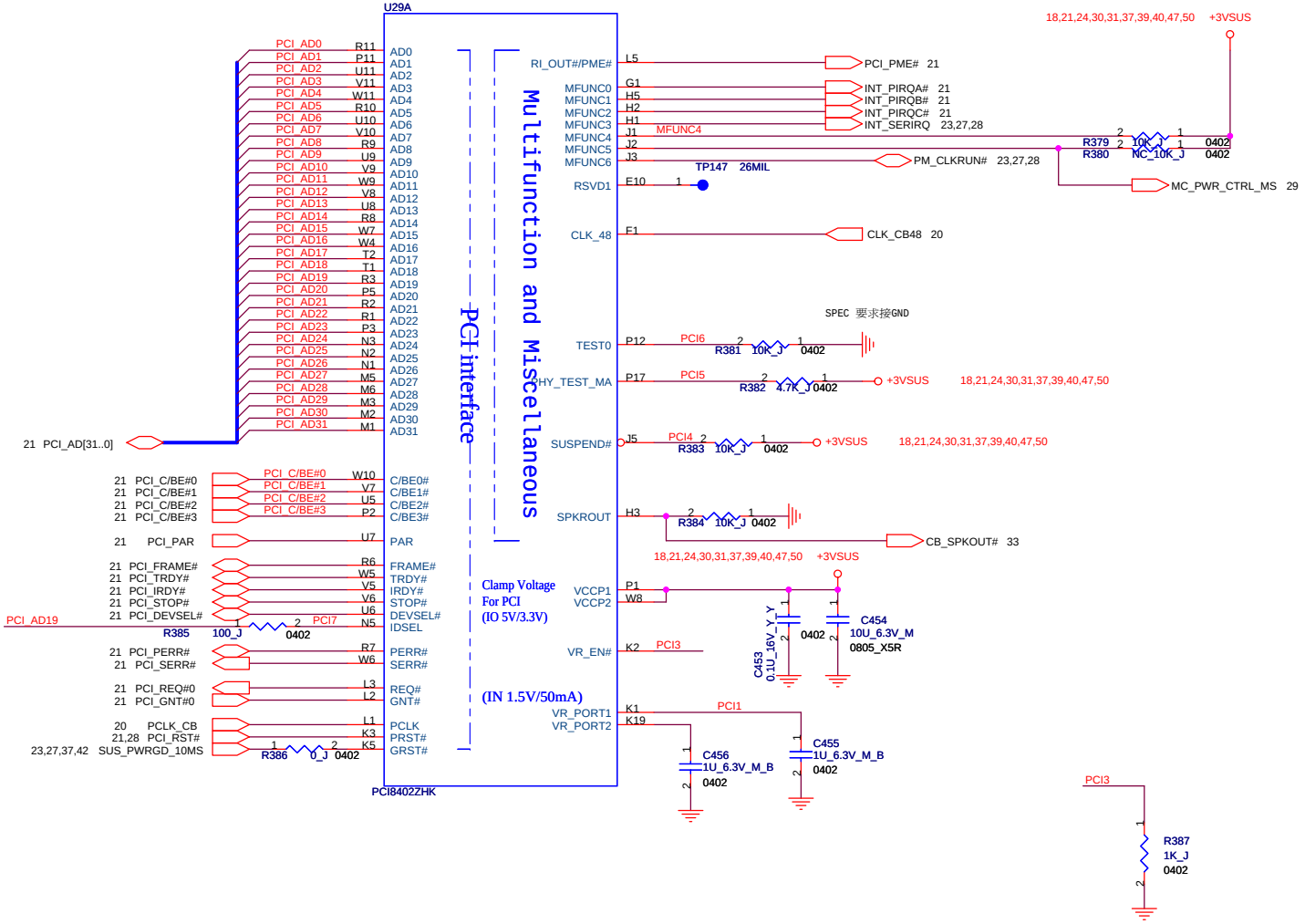

FOXCONN	HON HAI Precision Ind. Co., Ltd. CCPBG - R&D Division	
Title	PCI (PCI BUS) 1/3	
Size A3	Document Number MS70-1-01	Rev 2.0
Date: Tuesday, August 22, 2006	Sheet 38 of 55	

www.vinafix.vn

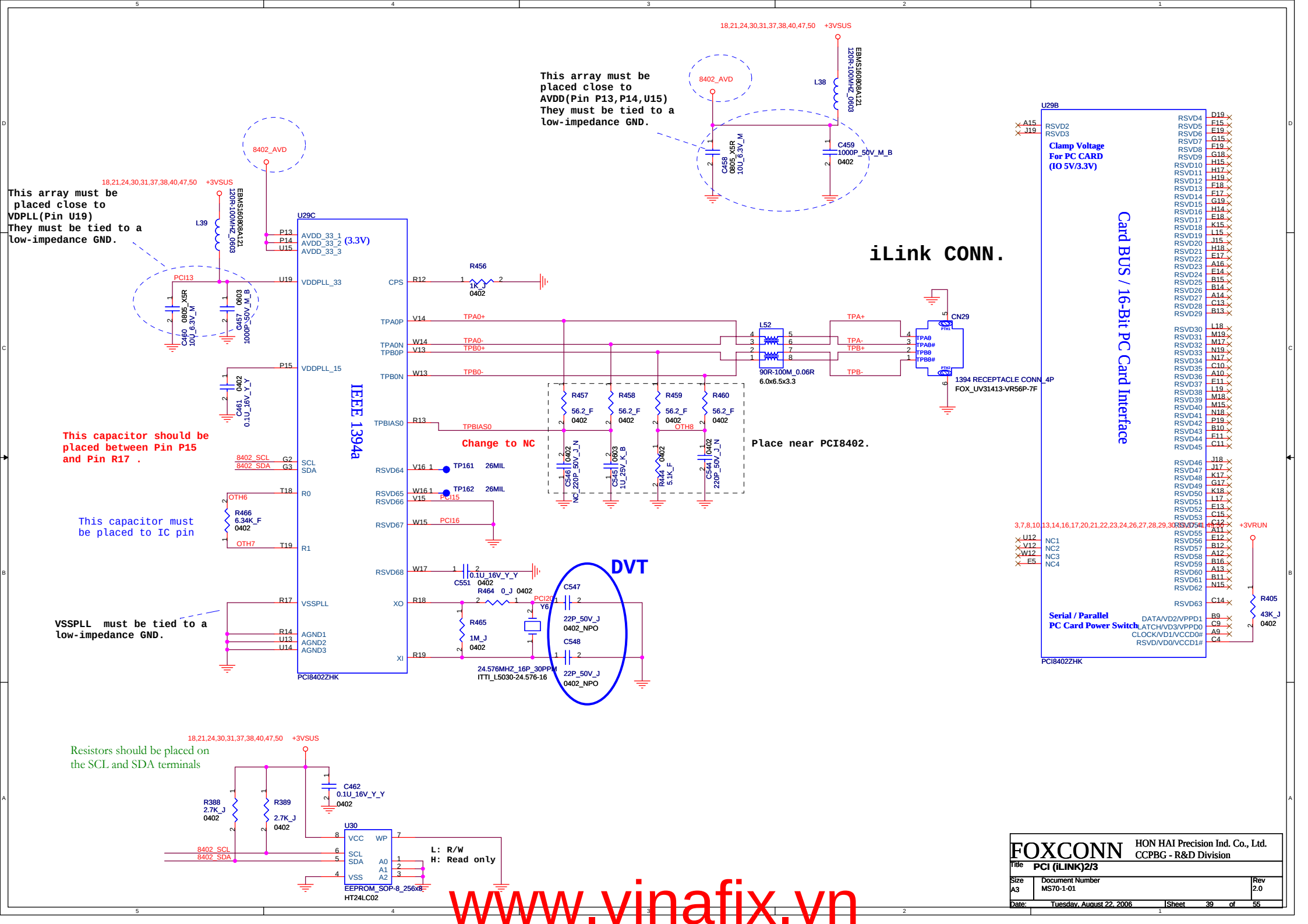
iLink CONN.
This array must be placed close to AVDD(Pin P13,P14,U15) They must be tied to a low-impedance GND.
This array must be placed close to VDPLL(Pin U19) They must be tied to a low-impedance GND.
This capacitor should be placed between Pin P15 and Pin R17 .
This capacitor must be placed to IC pin
VSSPLL must be tied to a low-impedance GND.
Change to NC
Place near PCI8402.
DVT
IEEE 1394a
U29C
PCI8402ZHK
U29B
Card BUS / 16-Bit PC Card Interface
Clamp Voltage For PC CARD (IO 5V/3.3V)
Serial / Parallel PC Card Power Switch
1394 RECEPTACLE CONN_4P
FOX_UV31413-VR56P-7F
90R-100M_0.06R
6.0x6.5x3.3
24.576MHZ_16P_30PPM
ITTI_L5030-24.576-16
Resistors should be placed on the SCL and SDA terminals
EEPROM_SOP-8_256x8
HT24LC02
L: R/W
H: Read only
FOXCONN
HON HAI Precision Ind. Co., Ltd.
CCPBG - R&D Division
Title PCI (iLINK)2/3
Size A3
Document Number MS70-1-01
Rev 2.0
Date: Tuesday, August 22, 2006
Sheet 39 of 55
www.vinafix.vn

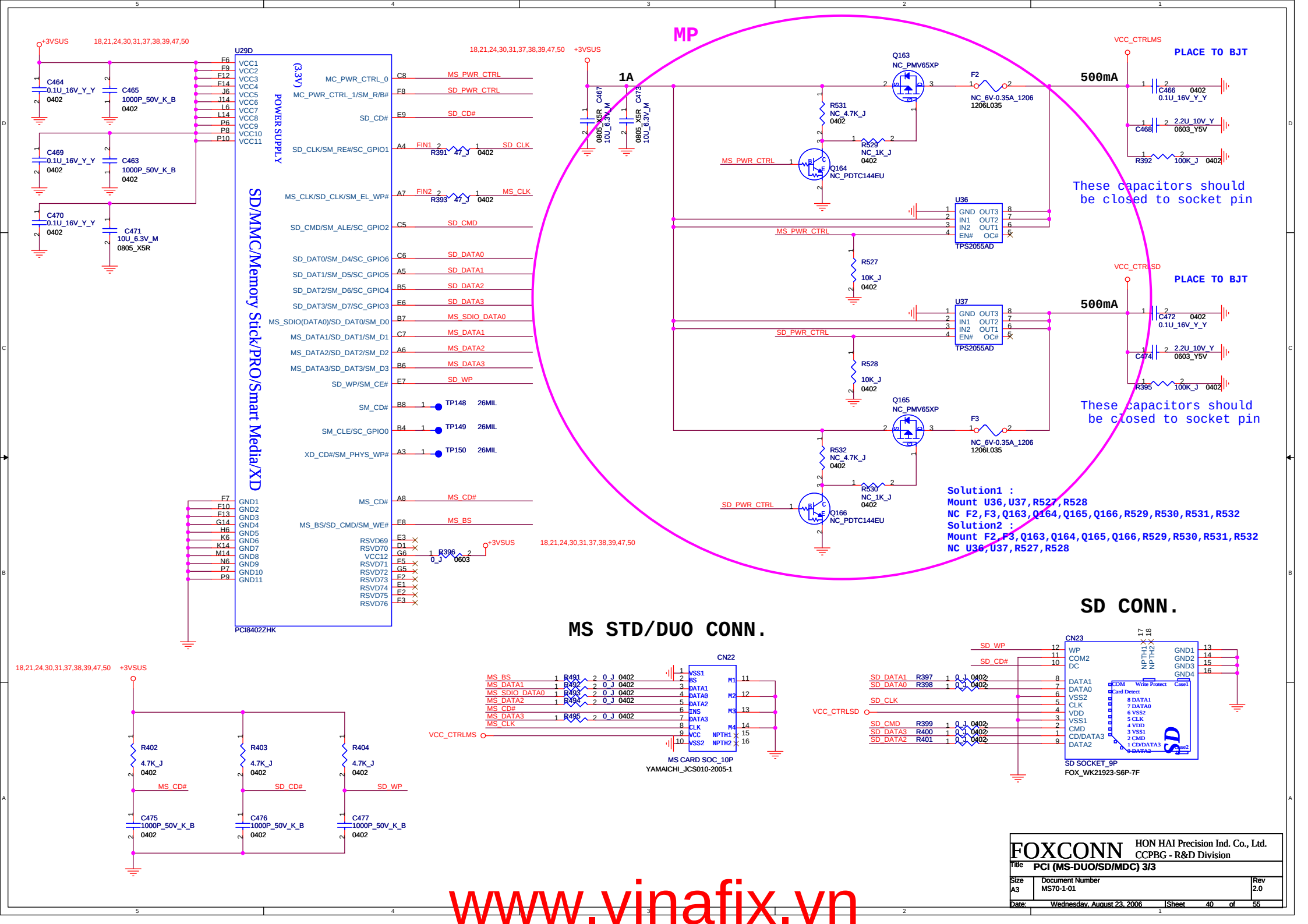

FOXCONN HON HAI Precision Ind. Co., Ltd. CCPBG - R&D Division

Title: PCI (MS-DUO/SD/MDC) 3/3

Size A3 | Document Number MS70-1-01 | Rev 2.0

Date: Wednesday, August 23, 2006 | Sheet 40 of 55

www.vinafix.vn

POWER BUTTON

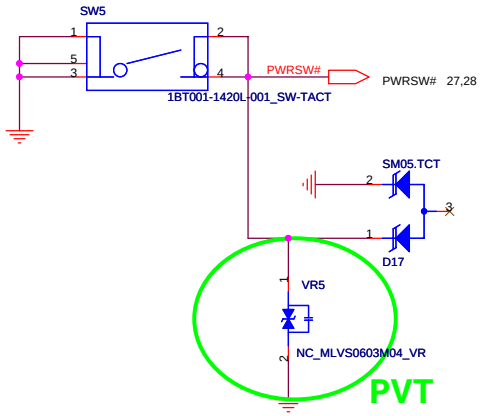

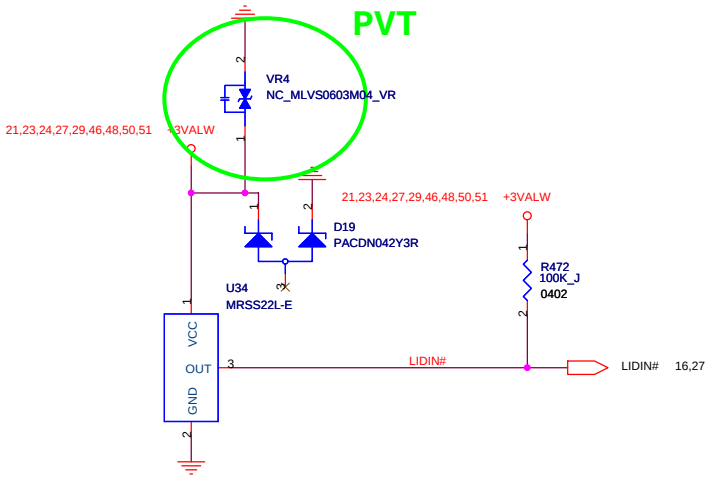

LID Switch

EMI CAP

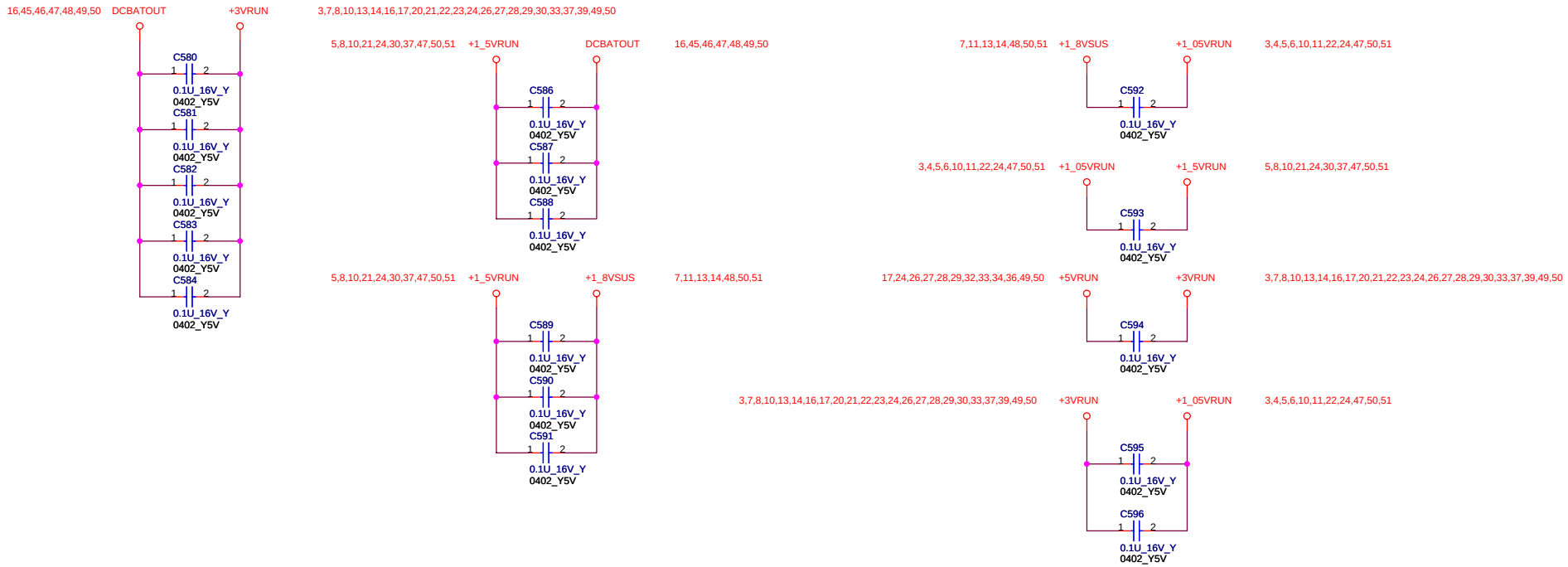

FOXCONN	HON HAI Precision Ind. Co., Ltd. CCPBG - R&D Division	
Title	Button/LID Switch/EMI CAP	
Size A3	Document Number MS70-1-01	Rev 2.0
Date: Tuesday, August 22, 2006	Sheet 41 of 55	

www.vinafix.vn

USB CONN X 2

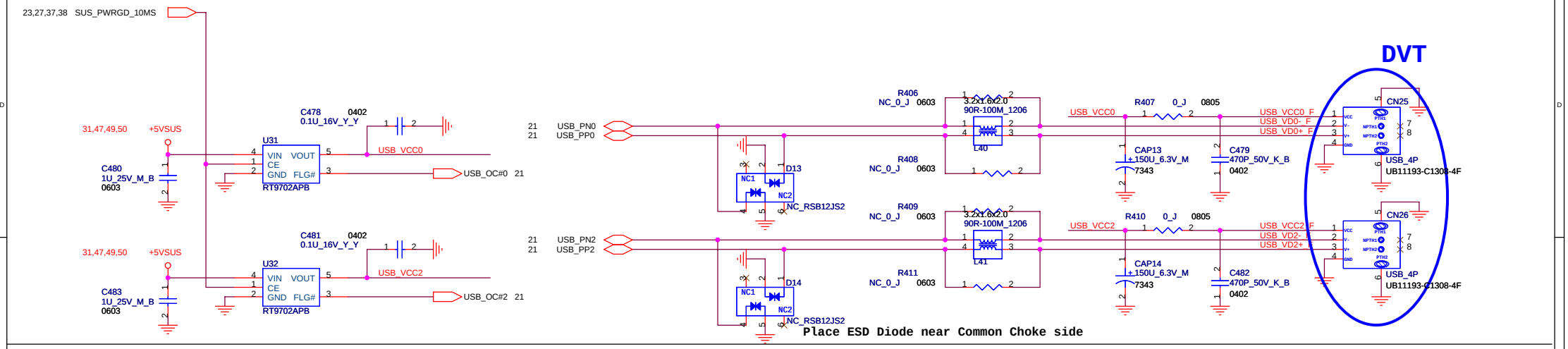

FOXCONN	HON HAI Precision Ind. Co., Ltd. CCPBG - R&D Division	
Title	USB2.0	
Size A3	Document Number MS70-1-01	Rev 2.0
Date: Tuesday, August 22, 2006	Sheet 42 of 55	

www.vinafix.vn

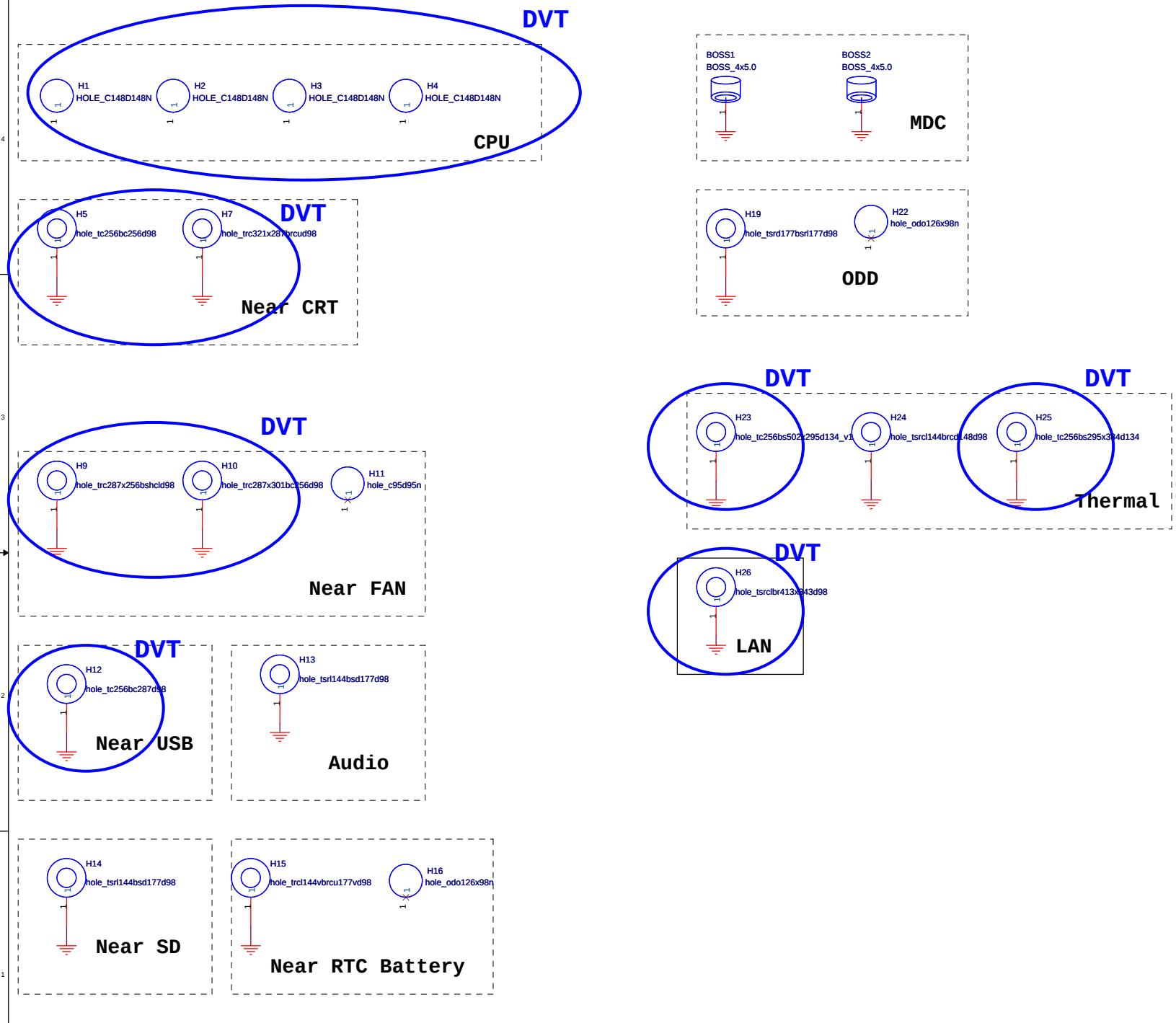

FOXCONN	HON HAI Precision Ind. Co., Ltd. CCPBG - R&D Division	
Title	HOLE	
Size A3	Document Number MS70-1-01	Rev 2.0
Date: Tuesday, August 22, 2006	Sheet 43 of 55	

www.vinafix.vn

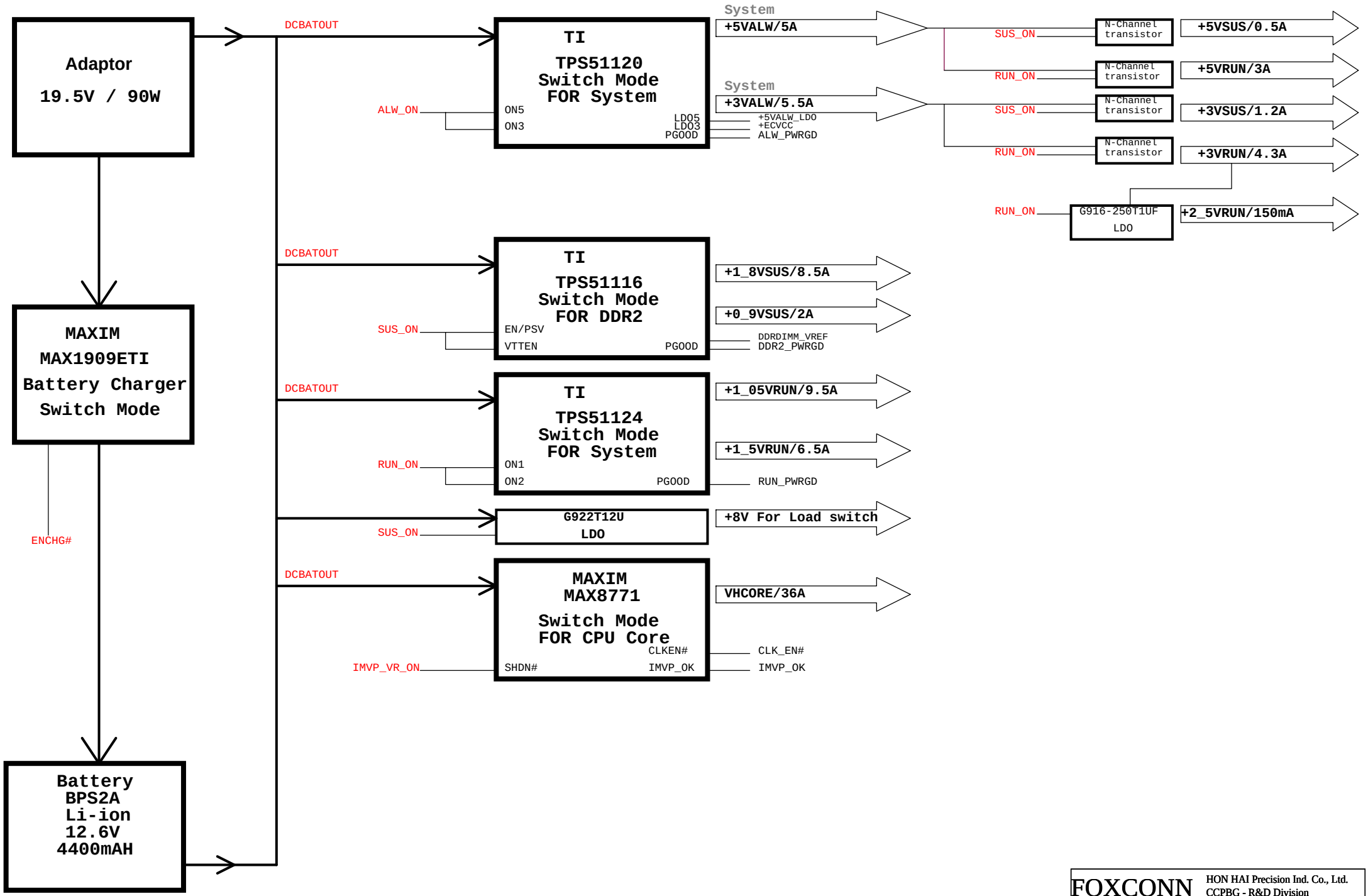

FOXCONN	HON HAI Precision Ind. Co., Ltd. CCPBG - R&D Division	
Title	Power Design Diagram-ZG	
Size A3	Document Number MS70-1-01	Rev 2.0
Date: Tuesday, August 22, 2006	Sheet 44 of 55	

www.vinafix.vn

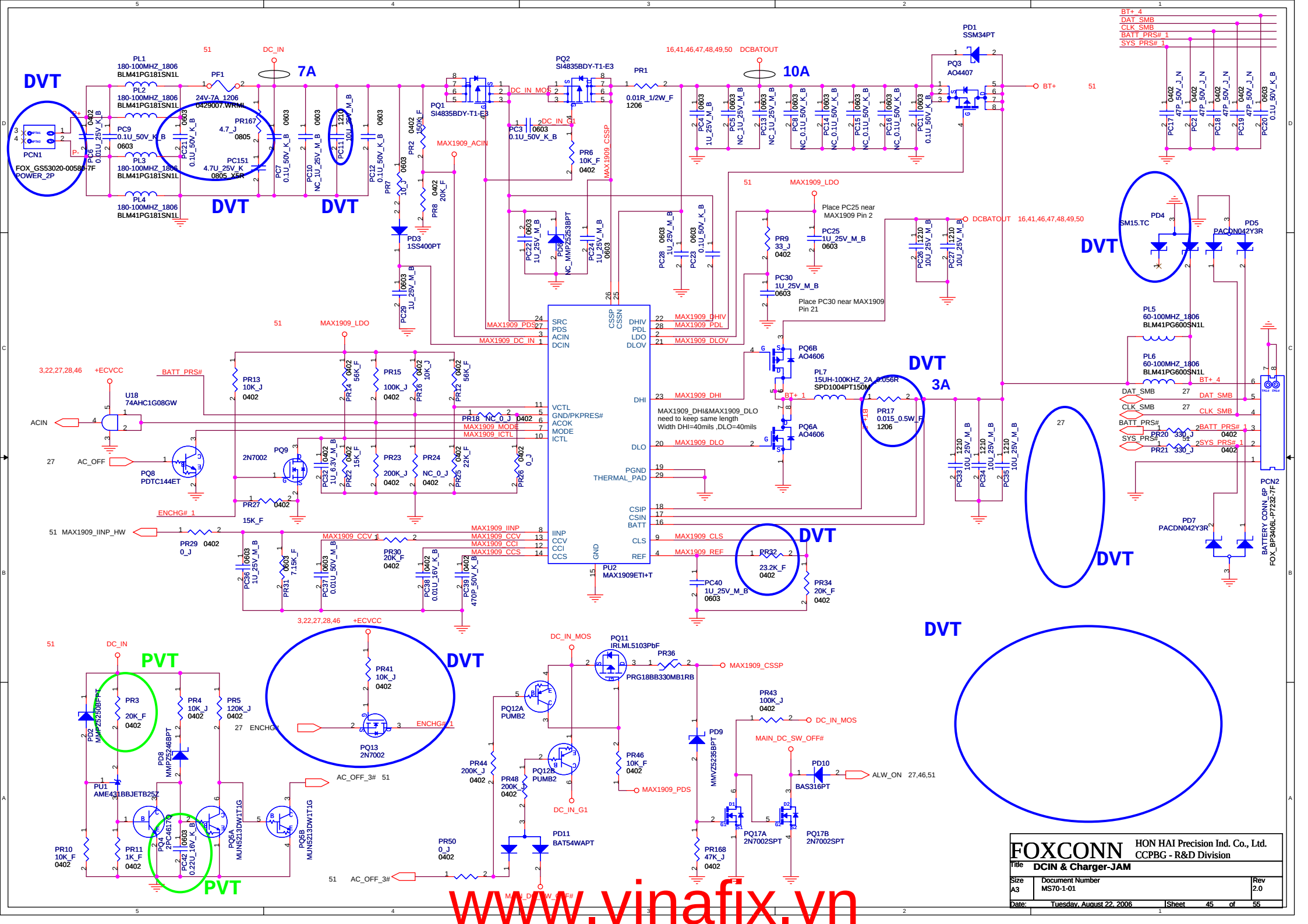

www.vinafix.vn

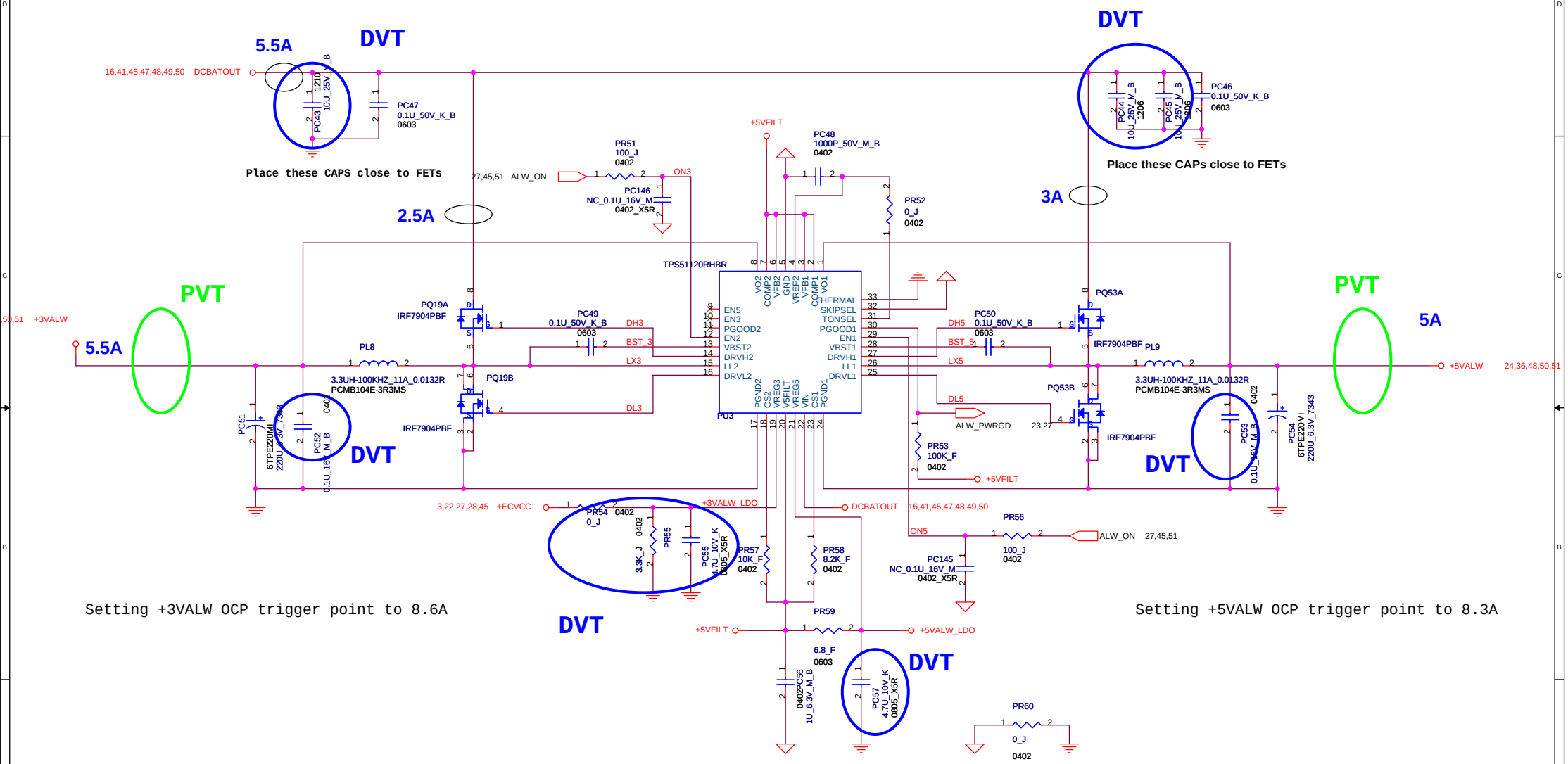

FOXCONN	HON HAI Precision Ind. Co., Ltd. CCPBG - R&D Division	
Title	D/D Power-JAM	
Size A3	Document Number MS70-1-01	Rev 2.0
Date: Tuesday, August 22, 2006	Sheet 46 of 55	

www.vinafix.vn

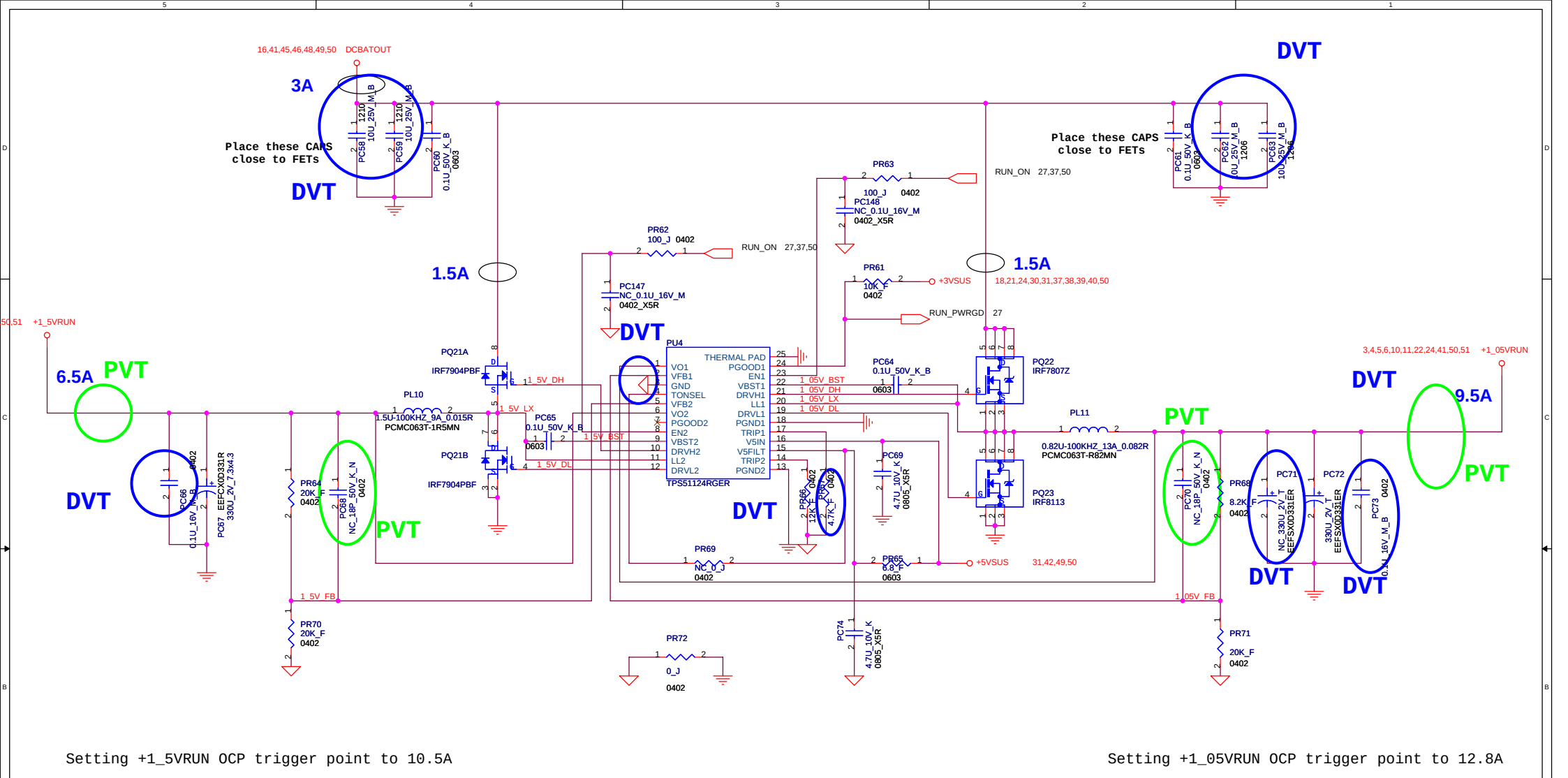

FOXCONN	HON HAI Precision Ind. Co., Ltd. CCPBG - R&D Division	
Title	1.5V/1.05V-JAM	
Size A3	Document Number MS70-1-01	Rev 2.0
Date: Tuesday, August 22, 2006	Sheet 47 of 55	

www.vinafix.vn

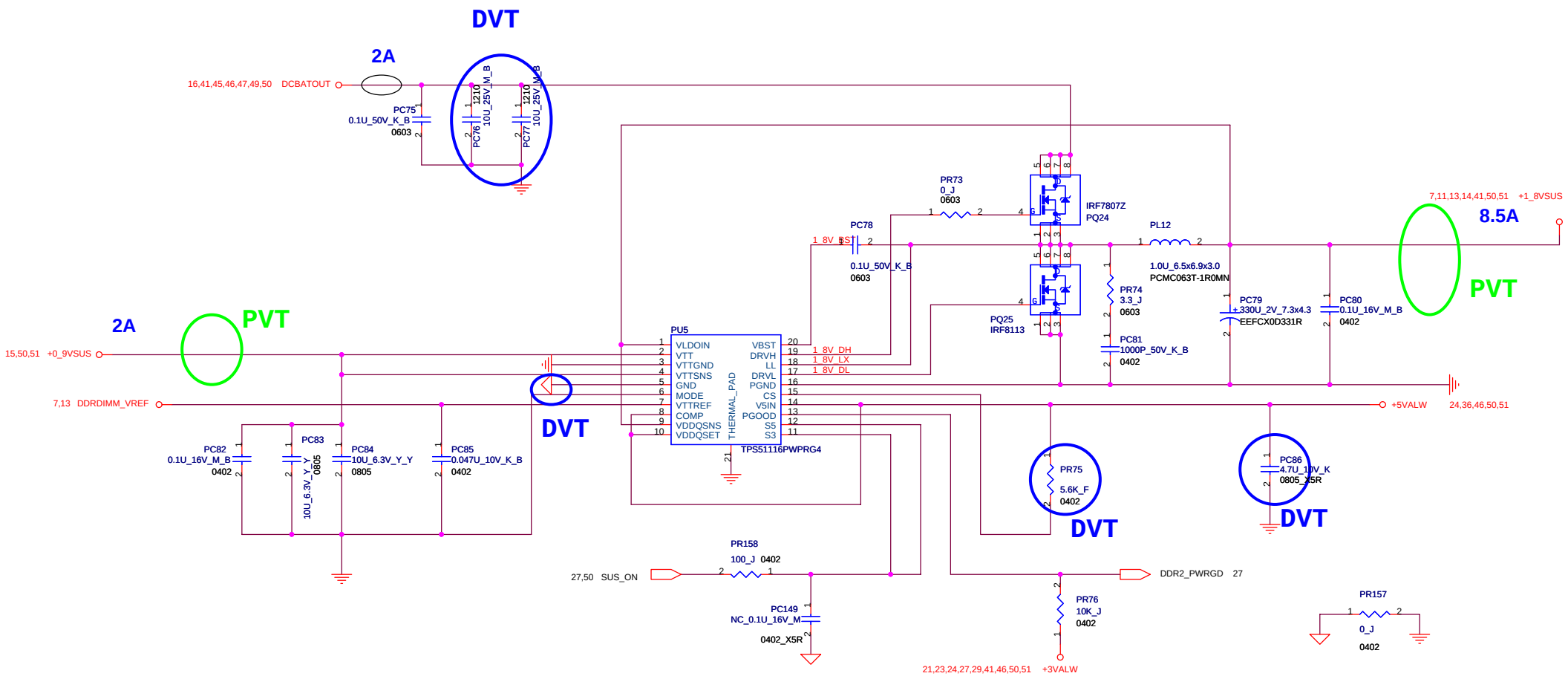

Setting +1_8VSUS OCP trigger point to 11.6A

FOXCONN	HON HAI Precision Ind. Co., Ltd. CCPBG - R&D Division	
Title	1.8V/0.9V-CWK	
Size A3	Document Number MS70-1-01	Rev 2.0
Date: Tuesday, August 22, 2006	Sheet 48 of 55	

www.vinafix.vn

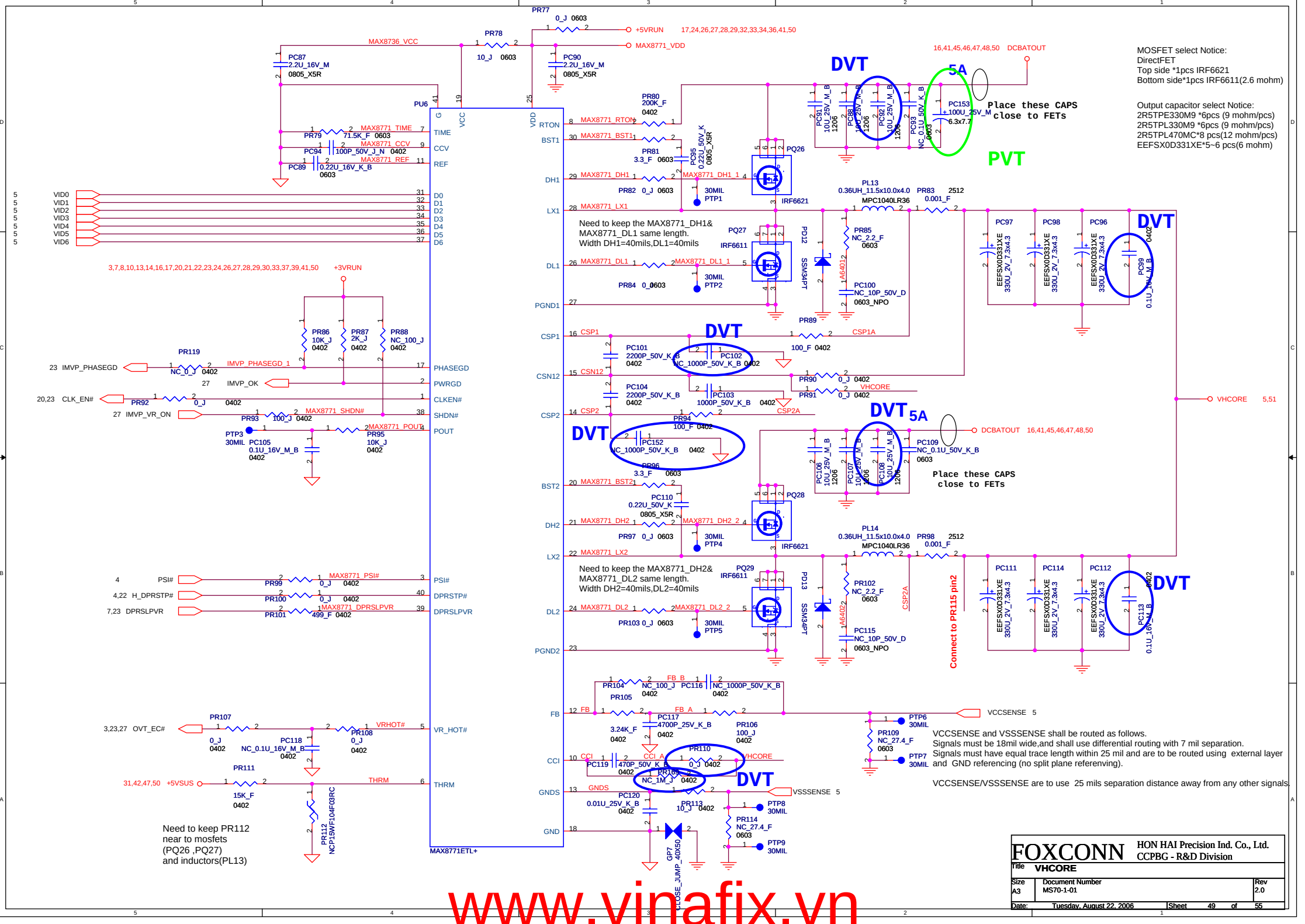

www.vinafix.vn

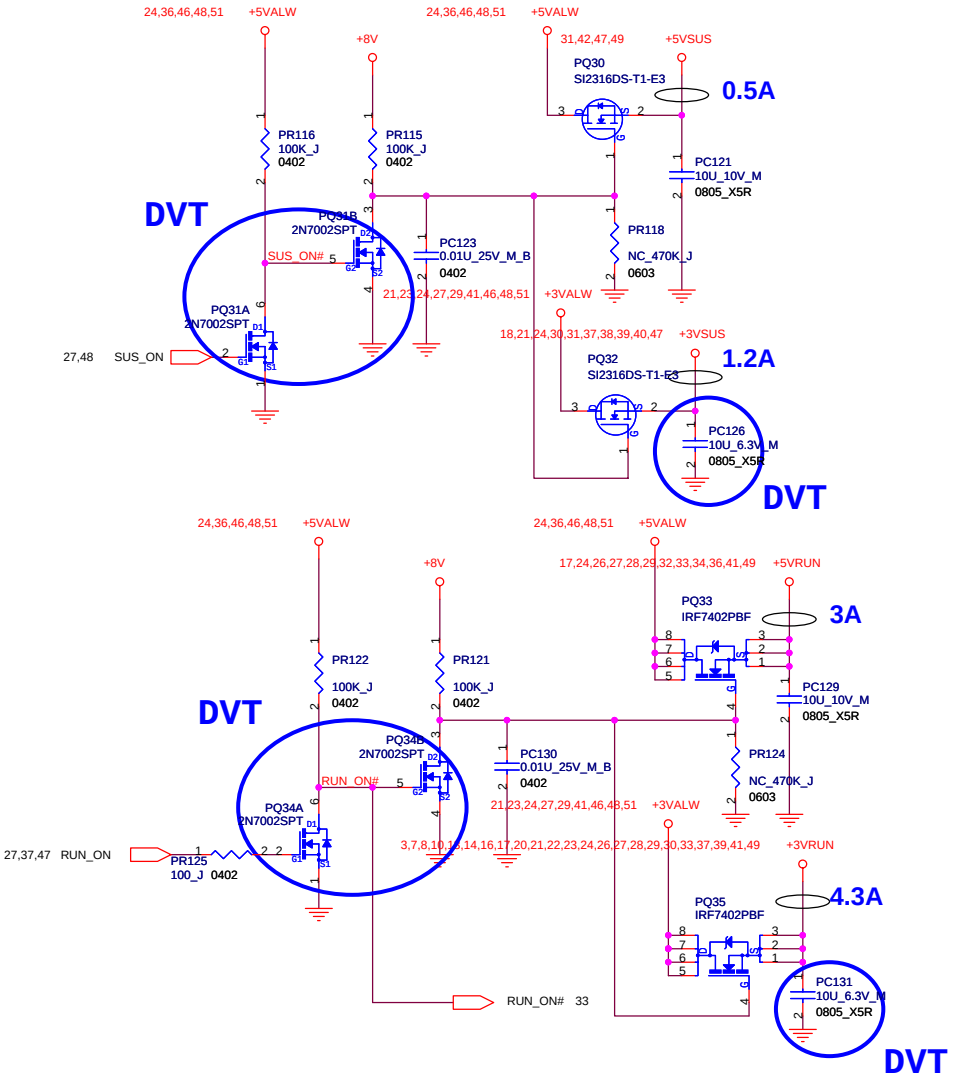

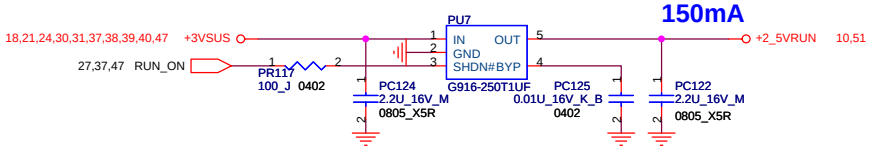

for load switch

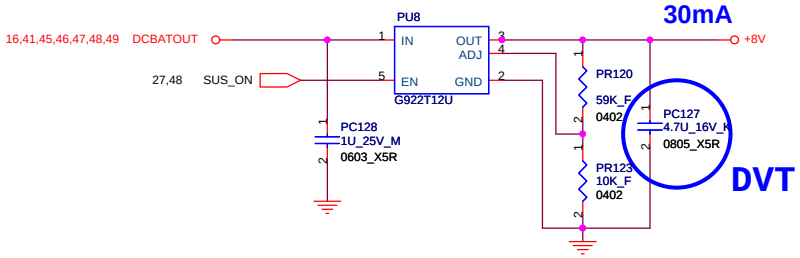

Discharge circuit for power-off

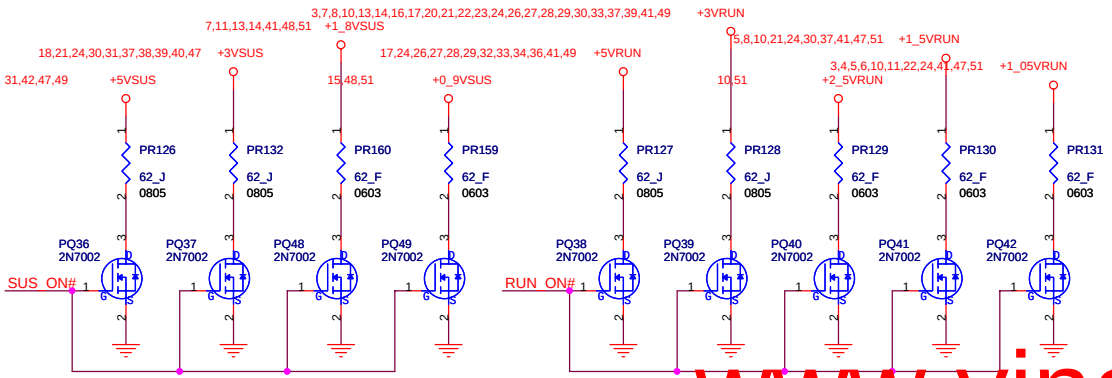

FOXCONN	HON HAI Precision Ind. Co., Ltd. CCPBG - R&D Division	
Title	Other power plan-ZG	
Size A3	Document Number MS70-1-01	Rev 2.0
Date: Tuesday, August 22, 2006	Sheet 50 of 55	

www.vinafix.vn

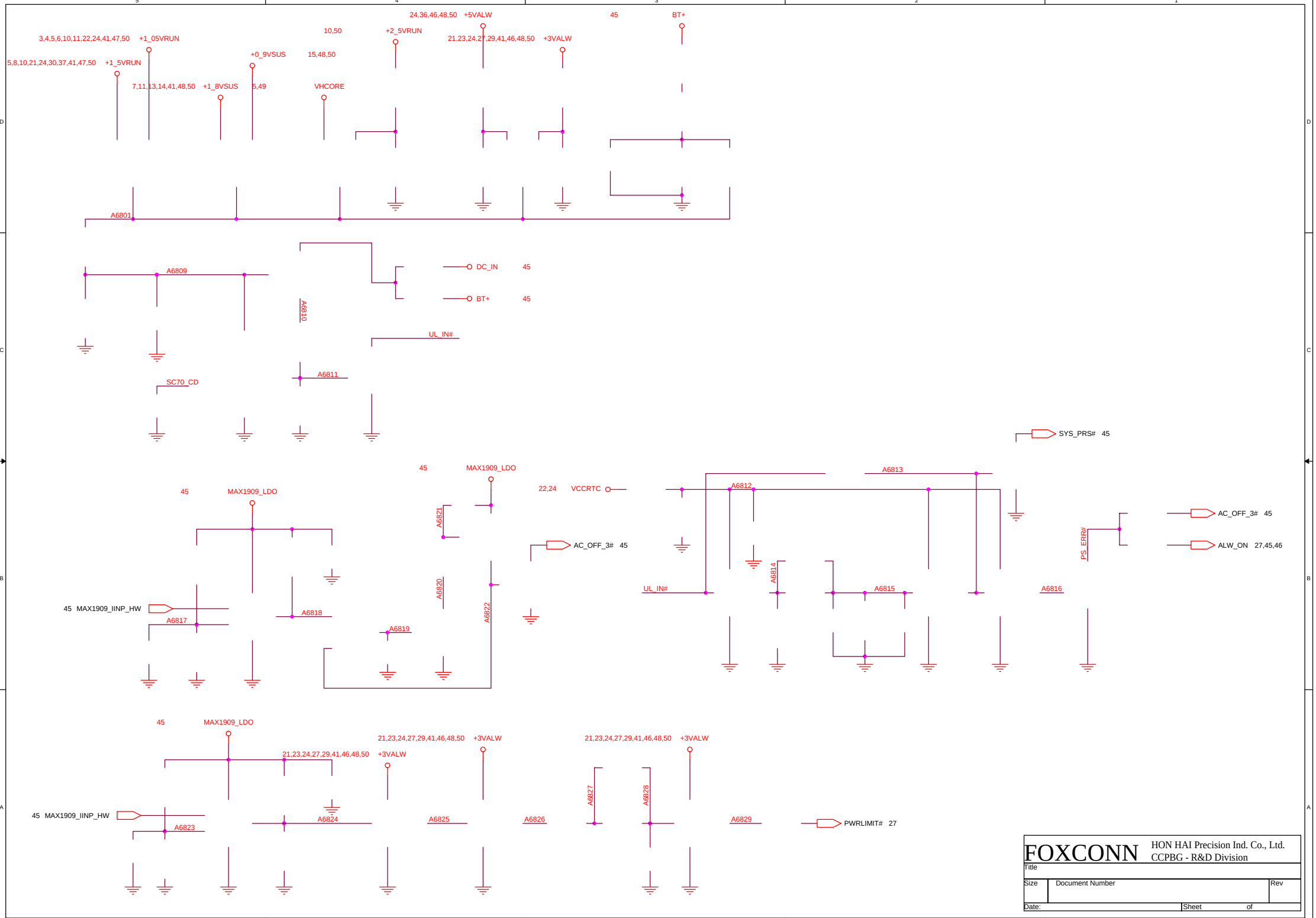
3,4,5,6,10,11,22,24,41,47,50 +1_05VRUN
5,8,10,21,24,30,37,41,47,50 +1_5VRUN
7,11,13,14,41,48,50 +1_8VSUS
+0_9VSUS 5,49
10,50 +2_5VRUN
15,48,50 VHCORE
24,36,46,48,50 +5VALW
21,23,24,27,29,41,46,48,50 +3VALW
45 BT+
A6801
A6809
A6810
DC_IN 45
BT+ 45
UL_IN#
A6811
SC70_CD
SYS_PRS# 45
45 MAX1909_LDO
45 MAX1909_LDO
A6821
22,24 VCCRTC
AC_OFF_3# 45
A6813
A6812
AC_OFF_3# 45
ALW_ON 27,45,46
PS_ERR#
A6814
UL_IN#
A6815
A6816
45 MAX1909_IINP_HW
A6817
A6818
A6820
A6822
A6819
45 MAX1909_LDO
21,23,24,27,29,41,46,48,50 +3VALW
21,23,24,27,29,41,46,48,50 +3VALW
21,23,24,27,29,41,46,48,50 +3VALW
45 MAX1909_IINP_HW
A6823
A6824
A6825
A6826
A6827
A6828
A6829
PWRLIMIT# 27
FOXCONN
HON HAI Precision Ind. Co., Ltd.
CCPBG - R&D Division
Title
Size
Document Number
Rev
Date:
Sheet
of

HISTORY (1)

(2006/04/25)

P.16 CN3 pin5 Add R515 0ohm for QDI LCD Panel doesn't support gamma correction issue.
P.17 Add VGA_CRT_DET# connect to U15 pin29 for Semi-PnP function fail issue.
P.20 U11 pin57 add R516 10Kohm pull down for LAN can't be recognized issue.
P.27 U15 pin29 add R513 10Kohm pull up for Semi-PnP function fail issue.
P.27 U15 pin12 add R514 100Kohm pull down for EC hardware strap pin.
P.27 U15 pin171 add C597 1000pF to ground for FAN can't be controlled issue.
P.31 R304 change from 4.7k to 10k for FAN can't be controlled issue.

(2006/05/03)

P.49 Add netname(IMVP_PHASEGD_1) on the right side of PR119 for application modification.
P.45 PC11, PC21, PC151, PR167 change from DNI to mount for DC_IN spike issue
P.45 PD4 pin1 and pin3 exchange for application modification
P.46 PR54 change from 100 ohm to 0 ohm for PU3 output abnormal issue
P.46 PR55 change from DNI to mount for can't boot up issue
P.47 PU4 pin3 change from GND to GND_SIGNAL_1D5V for application modification
P.48 PU5 pin5 change from GND to GND_SIGNAL_1D8V for application modification
P.49 Add PR169 NC_1M ohm for MAX8771 CCI issue
P.49 PC96, PC97, PC98, PC111, PC112, PC114 chenge from SANYO 2R5TPL330M9 to Panasonic EEFSX0D331XE for purchase difficult

(2006/05/04)

P.37 Add Q162(NC), R517, R518(NC) for Express card power sequence issue

(2006/05/15)

P.45 PR32 change from 22K_F to 23.2K_F for ACIN Vcls function trigger point correct to 3.4A
P.47 PR67 change from 8.2K_F to 4.7K_F for +1_05VRUN OCP trigger point correct to 12.8A
P.48 PR75 change from 6.8K_F to 5.6K_F for +1_8VSUS OCP trigger point correct to 11.6A
P.51 PR146 change from 51K_F to 46.4K_F for DCBATOUT OCP trigger point correct to 4.2A
P.51 PR150 change from 62K_F to 56K for PWRLIMIT# function trigger point correct to 3.6A
P.46 Delete PJ1, PJ2
P.47 Delete PJ3, PJ4, PJ5, PJ6
P.48 Delete PJ7, PJ8, PJ9

(2006/05/17)

P.45 Add PR41 10K_J_0402 and PQ13 2N7002 for preventing leakage current
P.45 PR17 change from 0.015_J 0805 to 0.015_F 1206 for application modification
P.46 PR55 change from 1K_J to 3.3K_J and PC55, PC57 change from 10u_25V X5R 1206 to 4.7u_10V X5R 0805 for reducing +ECVCC static current
P.47 PC71 change from mount to DNI for application modification
P.49 PR110 change from 20K_J to 0_J and PC102 change from DNI to mount for MAX8771 CCI issue
P.45 Delete PR19, PR28, PR33, PR35, PR37, PR38, PR39, PR40, PC31, PQ7, PQ10, PQ14, PQ16 For +ECVCC needed to work in battery only mode
P.51 Delete PD36, PD37 for +ECVCC needed to work in battery only mode
P.51 The net of VSOURCE (PQ43 pin3) change to DCBATOUT for +ECVCC needed to work in battery only mode
P.51 The net of BATT_EN (PD38 pin2) change to ALW_ON for +ECVCC needed to work in battery only mode

(2006/05/19)

P.13 C155 change from 2.2U_10V_Y_Y to 1000P_16V_K ; C159 change from 0.1U_16V_Y_Y to 1000P_50V_K for EMC DDR2 solution
P.14 C168 change from 2.2U_10V_Y_Y to 1000P_16V_K ; C172 change from 0.1U_16V_Y_Y to 1000P_50V_K for EMC DDR2 solution
P.15 C177,C179,C181,C191,C192,C196 change from 0.1U_16V_Y_Y to 1000P_50V_K for EMC DDR2 solution
P.39 C547,C548 change from 18P_50V_J_N to 22P_50V_J for PCI8402's Crystal issue
P.30 LED1 change from HT-110Y to HT-110UYG for LED color requirement
P.45 PCN1 change from MOLEX_53259-0229 to FOX_GS53020-00580-7F
P.45 PC11 change from 10U_25V_M_1206 to 10U_25V_M_B_1210 for purchase convenient
P.46 PC43,PC44,PC45 change from 10U_25V_M_B_1206 to 10U_25V_M_B_1210 for purchase convenient
P.47 PC58,PC59,PC62,PC63 change from 10U_25V_M_B_1206 to 10U_25V_M_B_1210 for purchase convenient
P.48 PC76,PC77 change from 10U_25V_M_B_1206 to 10U_25V_M_B_1210 for purchase convenient
P.48 PC86 change from 4.7U_10V_K_B_1206 to 4.7U_10V_K_0805 for purchase convenient
P.50 PC126,PC131 change from 10U_10V_M to 10U_6.3V_M for purchase convenient
P.50 PC127 change from 4.7U_25V_K_B_1206 to 4.7U_16V_K_0805 for purchase convenient

(2006/05/22)

P.32 CN21 change from FOXCONN_GB11060_0221_7F to FOXCONN_GB5RF060_1200_7F for ME's requirement
P.29 CN30,CN31 change from foxconn_gb11120_0221_7f to FOXCONN_GB5RF120_1200_7F for ME's requirement
P.29 CN31 change from mount to DNI for ME's requirement
P.50 PQ31,PQ34 change from DIODES,2N7002DW-7-F to CHENMKO,2N7002SPT for purchase convenient
P.51 PQ45 change from DIODES,2N7002DW-7-F to CHENMKO,2N7002SPT for purchase convenient
P.27 Q149 change from DIODES,2N7002DW-7-F to CHENMKO,2N7002SPT for purchase convenient

(2006/05/23)

P.47 PC62,PC63 change from 10U_25V_M_B_1210 to 10U_25V_M_B_1206 for ME limit of height
P.46 PC44,PC45 change from 10U_25V_M_B_1210 to 10U_25V_M_B_1206 for ME limit of height
P.46 Add PJ1,PJ2 for test request
P.47 Add PJ3,PJ4 for test request
P.48 Add PJ7,PJ9 for test request

(2006/05/24)

P.42 CN25,CN26(USB CONN) change from FOX_UB11193_C1301_4F to UB11193-C1308-4F for ME's requirement
P.17 CN5(VGA CONN) change from FOX_DZ11A91_MB221_4F to DZ11A91-MW223-4F for ME's requirement

(2006/05/25)

P.47 Add PJ6 for test request
P.26 CN8 footprint change from FOXCONN_LD2722H_S469 to FOXCONN_LD2722H_S469_MS70 for ME PAD request
P.32 C389 change from 22U_10V_Y_Y_1206 to 10U_10V_M_0805 and add C598 10U_10V_M_0805 for limit of ME
P.43 H1,H2,H3,H4 change from hole_c158d158n to HOLE_C148D148N for ME request
P.43 H7 change from hole_tsru144bsru177d98 to hole_trc321x287brcud98 for ME request
P.43 H26 change from hole_c120d100 to hole_tsrclbr413x343d98 for ME request
P.43 H23 change from hole_tc256brcld295d98_v1 to hole_tc256bs502x295d134_v1 for ME request
P.43 H25 change from hole_tc256brcu148d98 to hole_tc256bs295x384d134 for ME request
P.43 H5 change from hole_tc256bc315d98 to hole_tc256bc256d98 for ME request
P.43 H10 change from hole_tshrd144bc315d98 to hole_trc287x301bc256d98 for ME request
P.43 H9 change from hole_trcd144brcl177d98 to hole_trc287x321brcd98 for ME request
P.43 H12 change from hole_tc256bsrcu144d98 to hole_tc256bc287d98 for ME request

(2006/05/26)

P.42 CN25,CN26 change from FOXCONN_UB11193_C1308_4F to FOXCONN_UB11193_C1308_4F_HM for solder issue
P.43 H9 change from hole_trc287x321brcd98 to hole_trc287x256bshcld98 for ME request
P.17 D3 change from 16-CH500H4-0P00 to 16-SCS500V-4000 for purchase convenient
P.10 C119 change from 1C-2B30105-K000 to 1C-2B30475-K100 ;
C120 change from 1C-2B20103-K001(0402) to 1C-2B30475-K100(0603)
for +1_5VRUN_HMPLL noise issue
P.48 Add PJ8 for test request

(2006/06/01)

P.16 Add R519(0ohm 0402) for desinger set "LCDID3" to "0" by mistake.
P.49 PC102 change from mount to NC for application modification
P.46 PC52,PC53 change from 0.1U_16V_Y_Y(Y5V) to 0.1U_16V_M_B(X5R) for application modification
P.47 PC66,PC73 change from 0.1U_16V_Y_Y(Y5V) to 0.1U_16V_M_B(X5R) for application modification
P.49 PC99,PC113 change from 0.1U_16V_Y_Y(Y5V) to 0.1U_16V_M_B(X5R) for application modification
P.36 Q25 pin2 netname change from +5VRUN to +5VAMP
P.36 R376 pin2 netname change from GND to A_GND
P.36 Add U38,R520(NC) for SPK_MUTE_EN for Vista requirement
P.36 Add NET "SPK_MUTE_EN" from U38 pin2 to U15 pin99 for Vista requirement
P.40 Change U36,U37 from RT9702 to RT9703, Add R521~R524.
P.27 Delete Q149.

(2006/06/02)

P.16 R515,R519 change from mount to NC
P.36 Add R525(NC) for Audio mute option
P.49 Add PC152 for application modification
P.26 R510 change from mount to NC for application modification
P.22 R188 change from mount to NC for application modification

(2006/06/05)

P.49 PC92,PC108 change from NC to mount for design rating
P.40 U36,U37 change from RT9703 to RT9702, Del R521~R524 for RT9703 phase out issue
P.49 Add PC153 for solving audible noise
P.19 Add R526 for LAN application modification

(2006/06/06)

P.13 Add C599,C600(1000P_50V_K) ; C155 change from 1000P_16V_K to 2.2U_10V_Y_Y ; C159 change from 1000P_50V_K to 0.1U_16V_Y_Y for EMC solution
P.14 Add C601,C602(1000P_50V_K) ; C168 change from 1000P_16V_K to 2.2U_10V_Y_Y ; C172 change from 1000P_50V_K to 0.1U_16V_Y_Y for EMC solution
P.15 Add C603,C604(1000P_50V_K) ; C177,C179,C181,C191,C192,C196 change from 1000P_50V_K to 0.1U_16V_Y_Y for EMC solution
P.51 Add PD36,PD37 for application modification
P.19 C253 change form 0.1U_16V_M_B to 5P_50V_C ; C254 change from 5P_50V_C to 0.1U_16V_M_B ; Add L58 ; Del R526 for LAN application modification

FOXCONN	HON HAI Precision Ind. Co., Ltd. CCPBG - R&D Division	
Title	History (1)	
Size C	Document Number MS70-1-01	Rev 2.0
Date: Tuesday, August 22, 2006	Sheet 52 of 55	

www.vinafix.vn

HISTORY (2)

(2006/06/07)
P.26 R245 change from NC to mount for application modification

(2006/06/13)
P.33 R325 change from mount to NC for acoustic noise.
P.36 U38 change from 74AHC1G08GW to 74AHCT1G08GW for Vih can't meet EC spec.

PVT

(2006/07/12)
P.47 Change PC68, PC70 from mount to NC for TPS51124 OVP issue.
P.27 Add R526 (1K ohm) series on ALW_ON net to prevent EC damage issue.
P.46 Delete PJ1, PJ2
P.47 Delete PJ3, PJ4, PJ6
P.48 Delete PJ7, PJ8, PJ9
P.32 F1,R320,R321,L32,C598,C389,C390,C391,CN21 change from mount to NC for cancel Oide function
P.37 U33 change from 15-TPS2231-0000(24pin) to 15-TPS2231-0002(20pin) for purchase convenient
P.40 U36,U37 change from 15-RT9702A-0000 to 15-TPS2055-0000 ;
Add R527,R528 for MS_PWR_CTRL and SD_PWR_CTRL are recognized to be high level by accident

(2006/07/20)
P.26 CN9 vendor part number change from QT8H0506-13T3R-7F to QT8H0506-13T3R-4F
for packing type change.
P.49 PC153 change from 1C-10X0107-M403 to 1C-1XX0107-M400 for purchase convenient.
P.29 Delete CN31 for touch pad application modification.
P.22 R195 change from 47ohm to 0ohm ; C293 change from NC to mount for EMI solution.
P.29 LED6 change from 16-HT210DY-G000 to 16-HT210UD-UY00 for ME brightness issue.
LED5,LED7 change from 16-HT110Y0-0000 to 16-HT110UY-0000 for ME brightness issue.

(2006/07/21)
P.26 Add D22(NC) for ESD solution
P.30 R301 change from 120ohm to 47ohm for ME brightness issue

(2006/07/25)
P.30 C365 change from NC to mount for WLAN power ripple noise issue
P.26 Add VR1 for ESD solution
P.29 Add VR2,VR3(NC) for ESD solution
P.41 Add VR4,VR5(NC) for ESD solution

(2006/07/28)
P.29 Q155 change from 17-CHDTC14-4E01 to 17-2N70020-0000 for ME brightness issue.

(2006/07/31)
P.30 R301 change from 47ohm to 120ohm (LED1 is 10mA) for ME brightness issue
P.29 R418 change from 47ohm to 62ohm (LED5 is 18.75mA) for ME brightness issue
P.29 R424 change from 47ohm to 62ohm (LED6 is 19.5mA)
R425 change from 47ohm to 120ohm (LED6 is 10mA)for ME brightness issue
P.29 R426 change from 47ohm to 62ohm (LED7 is 18.9mA)

(2006/08/01)
P.31 Q17 change from 17-ME2301T-1000 to 17-S12301B-DS00 for Fan rotational speed issue

PVT schematic released

(2006/08/07)
P.45 PC42 change from 1C-2B30104-K000(0.1u) to 1C-2B30224-K000(0.22u)
and mount PC42 for solving AC_OFF_3# abnormal issue
P.34 R350 change from 6.2kohm to 6.98kohm for adjust the gain of speaker amp
P.26 VR1 change from mount to NC ; D22 change from NC to mount for purchase convenient.
P.29 R418,R426 change from 62ohm to 120ohm for LED brightness issue

(2006/08/13)
P.45 PR3 change from 1kohm to 20kohm for power circuit design improvement plan
which is DC_IN OVP circuit.

PVT SMT

MP

(2006/08/16)
P.23 Add D23 from IMVP_PWRGD to ALW_PWRGD for RTC stop issue backup (D23 is NC)
Add D24 from PM_RSMRST#(A3602) to ALW_PWRGD for RTC stop issue backup (D24 is NC)

(2006/08/17)
P.40 Add Q163,Q164,R529,F2(MS_PWR) for purchase convenient
Add Q165,Q166,R530,F3(SD_PWR) for purchase convenient

(2006/08/18)
P.40 R392,R395 change from 1Mohm to 100Kohm
F2,F3 move to pin3 side of Q163,Q165
P.40 Q163,Q165 change from PMBT2907A(PNP) to SI2301BDS-T1-E3(P-MOS)
R529,R530 change from 1.5kohm to 1kohm
Add R531,R532 4.7kohm
P.23 R221 change from 100ohm to 1kohm
D23,D24 change from BAS316PT to SCS500V-40-LF
D23,D24 change from NC to mount for RTC stop issue

(2006/08/23)
P.40 Q163,Q165 change from VISHAY_SI2301BDS-T1-E3 to Philips_PMV65XP for purchase convenient.

www.vinafix.vn