SERVICE MANUAL

B5130M

notebook

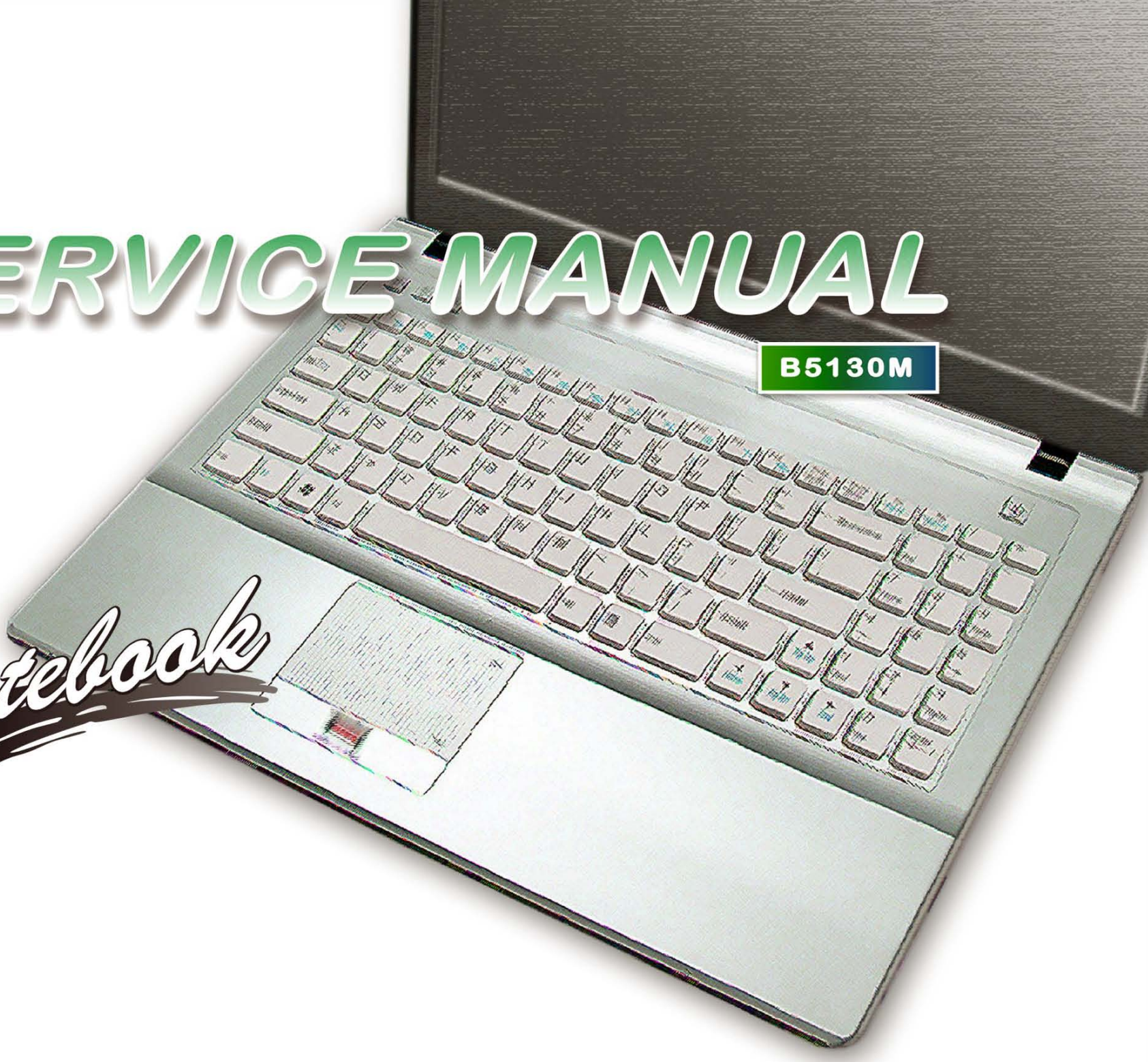

Notebook Computer

B5130M

Service Manual

Notice

The company reserves the right to revise this publication or to change its contents without notice. Information contained herein is for reference only and does not constitute a commitment on the part of the manufacturer or any subsequent vendor. They assume no responsibility or liability for any errors or inaccuracies that may appear in this publication nor are they in anyway responsible for any loss or damage resulting from the use (or misuse) of this publication.

This publication and any accompanying software may not, in whole or in part, be reproduced, translated, transmitted or reduced to any machine readable form without prior consent from the vendor, manufacturer or creators of this publication, except for copies kept by the user for backup purposes.

Brand and product names mentioned in this publication may or may not be copyrights and/or registered trademarks of their respective companies. They are mentioned for identification purposes only and are not intended as an endorsement of that product or its manufacturer.

Version 1.0
October 2010

Trademarks

Intel and **Intel Core** are trademarks of Intel Corporation.
Windows® is a registered trademark of Microsoft Corporation.
Other brand and product names are trademarks and /or registered trademarks of their respective companies.

About this Manual

This manual is intended for service personnel who have completed sufficient training to undertake the maintenance and inspection of personal computers.

It is organized to allow you to look up basic information for servicing and/or upgrading components of the ***B5130M*** series notebook PC.

The following information is included:

Chapter 1, Introduction, provides general information about the location of system elements and their specifications.
Chapter 2, Disassembly, provides step-by-step instructions for disassembling parts and subsystems and how to upgrade elements of the system.

Appendix A, Part Lists
Appendix B, Schematic Diagrams
Appendix C, Updating the FLASH ROM BIOS

IMPORTANT SAFETY INSTRUCTIONS

Follow basic safety precautions, including those listed below, to reduce the risk of fire, electric shock and injury to persons when using any electrical equipment:

1. Do not use this product near water, for example near a bath tub, wash bowl, kitchen sink or laundry tub, in a wet basement or near a swimming pool.
2. Avoid using a telephone (other than a cordless type) during an electrical storm. There may be a remote risk of electrical shock from lightning.
3. Do not use the telephone to report a gas leak in the vicinity of the leak.
4. Use only the power cord and batteries indicated in this manual. Do not dispose of batteries in a fire. They may explode. Check with local codes for possible special disposal instructions.
5. This product is intended to be supplied by a Listed Power Unit with an AC Input of 100 - 240V, 50 - 60Hz, DC Output of 19V, 4.74A (**90**W) minimum AC/DC Adapter.

CAUTION

This Computer's Optical Device is a Laser Class 1 Product

FCC Statement

This device complies with Part 15 of the FCC Rules. Operation is subject to the following two conditions:
This device may not cause harmful interference.
This device must accept any interference received, including interference that may cause undesired operation.

Instructions for Care and Operation

The notebook computer is quite rugged, but it can be damaged. To prevent this, follow these suggestions:

1. **Don't drop it, or expose it to shock.** If the computer falls, the case and the components could be damaged.

Do not expose the computer to any shock or vibration.	*Do not place it on an unstable surface.*	*Do not place anything heavy on the computer.* 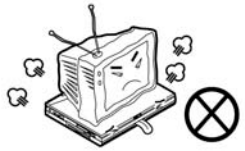

2. **Keep it dry, and don't overheat it.** Keep the computer and power supply away from any kind of heating element. This is an electrical appliance. If water or any other liquid gets into it, the computer could be badly damaged.

Do not expose it to excessive heat or direct sunlight.	*Do not leave it in a place where foreign matter or moisture may affect the system.*	*Don't use or store the computer in a humid environment.*	*Do not place the computer on any surface which will block the vents.* 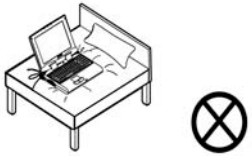

3. **Follow the proper working procedures for the computer**. Shut the computer down properly and don't forget to save your work. Remember to periodically save your data as data may be lost if the battery is depleted.

Do not turn off the power until you properly shut down all programs.	*Do not turn off any peripheral devices when the computer is on.*	*Do not disassemble the computer by yourself.*	*Perform routine maintenance on your computer.*

4. **Avoid interference.** Keep the computer away from high capacity transformers, electric motors, and other strong magnetic fields. These can hinder proper performance and damage your data.
5. **Take care when using peripheral devices**.

Use only approved brands of peripherals. 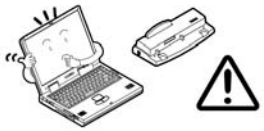	*Unplug the power cord before attaching peripheral devices.* 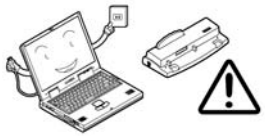

Power Safety

The computer has specific power requirements:

- Only use a power adapter approved for use with this computer.
- Your AC adapter may be designed for international travel but it still requires a steady, uninterrupted power supply. If you are unsure of your local power specifications, consult your service representative or local power company.
- The power adapter may have either a 2-prong or a 3-prong grounded plug. The third prong is an important safety feature; do not defeat its purpose. If you do not have access to a compatible outlet, have a qualified electrician install one.
- When you want to unplug the power cord, be sure to disconnect it by the plug head, not by its wire.
- Make sure the socket and any extension cord(s) you use can support the total current load of all the connected devices.
- Before cleaning the computer, make sure it is disconnected from any external power supplies.

Power Safety Warning

Before you undertake any upgrade procedures, make sure that you have turned off the power, and disconnected all peripherals and cables (including telephone lines). It is advisable to also remove your battery in order to prevent accidentally turning the machine on.

Do not plug in the power cord if you are wet.	*Do not use the power cord if it is broken.* 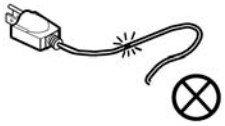	*Do not place heavy objects on the power cord.* 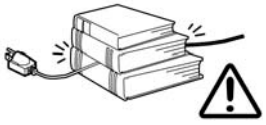

Battery Precautions

- Only use batteries designed for this computer. The wrong battery type may explode, leak or damage the computer.
- Do not continue to use a battery that has been dropped, or that appears damaged (e.g. bent or twisted) in any way. Even if the computer continues to work with a damaged battery in place, it may cause circuit damage, which may possibly result in fire.
- Recharge the batteries using the notebook's system. Incorrect recharging may make the battery explode.
- Do not try to repair a battery pack. Refer any battery pack repair or replacement to your service representative or qualified service personnel.
- Keep children away from, and promptly dispose of a damaged battery. Always dispose of batteries carefully. Batteries may explode or leak if exposed to fire, or improperly handled or discarded.
- Keep the battery away from metal appliances.
- Affix tape to the battery contacts before disposing of the battery.
- Do not touch the battery contacts with your hands or metal objects.

Battery Guidelines

The following can also apply to any backup batteries you may have.

- If you do not use the battery for an extended period, then remove the battery from the computer for storage.
- Before removing the battery for storage charge it to 60% - 70%.
- Check stored batteries at least every 3 months and charge them to 60% - 70%.

Battery Disposal

The product that you have purchased contains a rechargeable battery. The battery is recyclable. At the end of its useful life, under various state and local laws, it may be illegal to dispose of this battery into the municipal waste stream. Check with your local solid waste officials for details in your area for recycling options or proper disposal.

Caution

Danger of explosion if battery is incorrectly replaced. Replace only with the same or equivalent type recommended by the manufacturer. Discard used battery according to the manufacturer's instructions.

Battery Level

Click the battery icon in the taskbar to see the current battery level and charge status. A battery that drops below a level of 10% will not allow the computer to boot up. Make sure that any battery that drops below 10% is recharged within one week.

Related Documents

You may also need to consult the following manual for additional information:

User's Manual on CD/DVD
This describes the notebook PC's features and the procedures for operating the computer and its ROM-based setup program. It also describes the installation and operation of the utility programs provided with the notebook PC.

System Startup

1. Remove all packing materials.
2. Place the computer on a stable surface.
3. Insert the battery and make sure it is locked in position.
4. Securely attach any peripherals you want to use with the computer (e.g. keyboard and mouse) to their ports.
5. Attach the AC/DC adapter to the DC-In jack at the rear of the computer, then plug the AC power cord into an outlet, and connect the AC power cord to the AC/DC adapter.
6. Use one hand to raise the lid/LCD to a comfortable viewing angle (do not exceed 135 degrees); use the other hand (as illustrated in <Hyperlink B n I>Figure 1) to support the base of the computer (**Note**: **Never** lift the computer by the lid/LCD).
7. Press the power button to turn the computer "on".

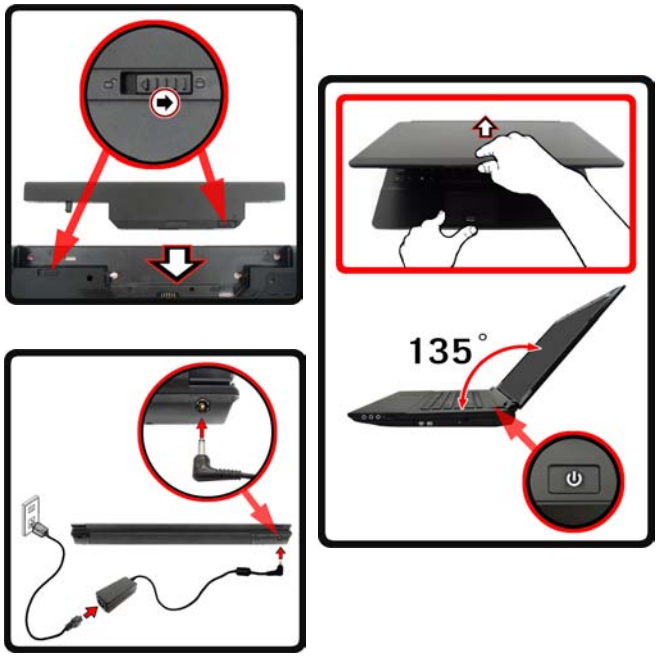

Figure 1
Opening the Lid/LCD/Computer with AC/DC Adapter Plugged-In

Contents

Introduction 1-1

Overview 1-1
Specifications 1-2
External Locator - Top View with LCD Panel Open 1-4
External Locator - Front & Right Side Views 1-5
External Locator - Left Side & Rear View 1-6
External Locator - Bottom View 1-7
Mainboard Overview - Top (Key Parts) 1-8
Mainboard Overview - Bottom (Key Parts) 1-9
Mainboard Overview - Top (Connectors) 1-10
Mainboard Overview - Bottom (Connectors) 1-11

Disassembly 2-1

Overview 2-1
Maintenance Tools 2-2
Connections 2-2
Maintenance Precautions 2-3
Disassembly Steps 2-4
Removing the Battery 2-5
Removing the Hard Disk Drive 2-6
Removing the System Memory (RAM) 2-8
Removing the Optical (CD/DVD) Device 2-10
Removing and Installing the Processor 2-11
Removing the Wireless LAN Module 2-14
Removing the Bluetooth Module 2-15
Removing the Keyboard 2-16
Removing the LCD Back Cover (B5130M) 2-17

Part Lists A-1

Part List Illustration Location A-2
Top with Fingerprint A-3
Top without Fingerprint A-4
Bottom A-5
LCD A-6
SATA DVD Super-Multi A-7
SATA Blu-Ray Combo A-8

Schematic Diagrams.....B-1

System Block Diagram B-2
Clock Generator B-3
CPU 1/7 (DMI, PEG, FDI) B-4
CPU 2/7 (CLK, MISC, JTAG) B-5
CPU 3/7 (DDR3) B-6
CPU 4/7 (Power) B-7
CPU 5/7 (Graphics Power) B-8
CPU 6/7 (GND) B-9
CPU 7/7 (RESERVED) B-10
DDR3 SO-DIMM_0 .....B-11
DDR3 SO-DIMM_1 .....B-12
Panel, Inverter, CRT B-13
VGA PCI-E Interface B-14
VGA Frame Buffer Interface B-15
VGA Frame Buffer A B-16
VGA Frame Buffer C B-17
VGA I/O B-18
VGA NVVDD Cecoupling B-19
IBEXPEAK- M 1/9 .....B-20
IBEXPEAK - M 2/9 .....B-21
IBEXPEAK - M 3/9 .....B-22
IBEXPEAK - M 4/9 .....B-23
IBEXPEAK - M 5/9 .....B-24
IBEXPEAK - M 6/9 .....B-25

IBEXPEAK - M 7/9 ..... B-26
IBEXPEAK - M 8/9 ..... B-27
IBEXPEAK - M 9/9 ..... B-28
New Card, Mini PCIE B-29
3G, CCD, TPM B-30
USB, Fan, TP, FP, Multi-Conn B-31
USB 3.0 ..... B-32
JMC 251 Card Reader B-33
SATA ODD, LED, Hotkey, LID SW B-34
RJ45, Modem B-35
Audio Codec ALC272 ..... B-36
KBC-ITE IT8518 ..... B-37
5VS, 3.3VS, 1.5VS, VIN1 ..... B-38
VDD3, VDD5 ..... B-39
Power 1.8V, PEX_VDD B-40
Power 1.5V/0.75V B-41
Power 1.1VS_VTT B-42
Power VGFX_Core B-43
V-Core B-44
Power VGA NVVDD B-45
AC_IN, Charger B-46
HDMI B-47
Audio Board B-48
B5100 Second HDD Board B-49
B5100 Click Board B-50
B5100 Fingerprint Board B-51
B5100 Power Switch Board B-52
B5100 LED & VGA SW Board B-53
Sequence B-54

Updating the FLASH ROM BIOS..... C-1

To update the FLASH ROM BIOS you must: C-1
Download the BIOS C-1
Unzip the downloaded files to a bootable CD/DVD/ or USB Flash drive C-1
Set the computer to boot from the external drive C-1
Use the flash tools to update the BIOS C-2
Restart the computer (booting from the HDD) C-2

Chapter 1: Introduction

Overview

This manual covers the information you need to service or upgrade the ***B5130M*** series notebook computer. Information about operating the computer (e.g. getting started, and the *Setup* utility) is in the *User's Manual*. Information about drivers (e.g. VGA & audio) is also found in the *User's Manual*. The manual is shipped with the computer.

Operating systems (e.g. *Windows Vista/ Window 7*, etc.) have their own manuals as do application softwares (e.g. word processing and database programs). If you have questions about those programs, you should consult those manuals.

The ***B5130M*** series notebook is designed to be upgradeable. See ***Disassembly on page 2 - 1*** for a detailed description of the upgrade procedures for each specific component. Please take note of the warning and safety information indicated by the "🔔" symbol.

The balance of this chapter reviews the computer's technical specifications and features.

Specifications

Latest Specification Information

The specifications listed here are correct at the time of sending them to the press. Certain items (particularly processor types/speeds) may be changed, delayed or updated due to the manufacturer's release schedule. Check with your service center for more details.

CPU

The CPU is not a user serviceable part. Accessing the CPU in any way may violate your warranty.

Processor Options

Intel® Core™ i7 Processor

i7-640M (2.80GHz), i7-620M (2.66GHz)

4MB L3 Cache & 1066MHz FSB

Intel® Core™ i5 Processor

i5-580M (2.66GHz), i5-560M (2.66GHz), i5-540M (2.53GHz), i5-520M (2.4GHz), i5-460M (2.53GHz), i5-450M (2.4GHz), i5-430M (2.26GHz)

3MB L3 Cache & 1066MHz FSB

Intel® Core™ i3 Processor

i3-380M (2.53GHz), i3-370M (2.40GHz), i3-350M (2.27GHz)

3MB L3 Cache & 1066MHz FSB

Core Logic

Intel® HM55 Chipset

BIOS

One 32Mb SPI Flash ROM

Phoenix™ BIOS

LCD

15.6" (39.62cm) HD/ HD+/ FHD LCD

Video Adapter

Intel® GMA HD and NVIDIA® GeForce GT 425M

Supports NVIDIA® Optimus Technology

Intel Integrated GPU (Intel® GMA HD):

Shared Memory Architecture (DVMT) up to **1.7GB**

Microsoft DirectX®10 Compatible

NVIDIA Discrete GPU (NVIDIA® GeForce GT 425M):

1GB GDDR3 Video RAM

Microsoft DirectX®11 Compatible

Memory

Two 204 Pin SO-DIMM Sockets Supporting **DDR3 1066MHz** Memory

Memory Expandable up to **8GB**

Security

BIOS Password

Security (Kensington® Type) Lock Slot

(**Factory Option**) Fingerprint Reader

Audio

High Definition Audio Compliant Interface

2 * Built-In Speakers

Built-In Microphone

Storage

(**Factory Option**) One Changeable 12.7mm(h) Optical Device Type Drive (Super Multi Drive Module or Blu-Ray Combo Drive Module)

One Changeable 2.5" 9.5 mm (h) **SATA** (Serial) HDD

Keyboard

Full-size “WinKey” keyboard (with numeric keypad)

Pointing Device

Built-in Touchpad (scrolling key functionality integrated)

Card Reader

Embedded Multi-in-1 Card Reader

- MMC (MultiMedia Card) / RS MMC
- SD (Secure Digital) / Mini SD / SDHC/ SDXC Compatible
- MS (Memory Stick) / MS Pro / MS Duo

Communication

Built-In Gigabit Ethernet LAN

(**Factory Option**) 1.3M/ 2.0M Pixel USB PC Camera Module

(**Factory Option**) Bluetooth **2.1** + EDR Module

(**Factory Option**) Combo WLAN (**802.11b/g/n**) and Bluetooth **3.0** Module

(**Factory Option**) Intel® WiFi Link 6200 (**802.11a/g/n**) Wireless LAN Half Mini-Card Module

(**Factory Option**) Intel® WiFi Link 1000 (**802.11b/g/n**) Wireless LAN Half Mini-Card Module

(**Factory Option**) Third-Party **802.11b/g/n** Wireless LAN Half Mini-Card Module

(**Factory Option**) 3.75G/HSPA Half Mini-Card Module

Interface

Three USB 2.0 Ports and **One** USB 3.0 Port Or **Four** USB 2.0 Ports*

***Note:** it depends on your purchase configuration

One eSATA Port

One HDMI-Out Port

One Headphone-Out Jack

One Microphone-In Jack

One S/PDIF Out Jack

One RJ-45 LAN Jack

One External Monitor Port

One DC-in Jack

Mini Card Slots

Slot 1 for **WLAN** Module

(**Factory Option**) Slot 2 for **3.75G/HSPA** Module

Environmental Spec

Temperature

Operating: 5°C - 35°C

Non-Operating: -20°C - 60°C

Relative Humidity

Operating: 20% - 80%

Non-Operating: 10% - 90%

Power

Full Range AC/DC Adapter

AC Input: 100 - 240V, 50 - 60Hz

DC Output: 19V, 4.74A (**90W**)

6 Cell Smart Lithium-Ion Battery Pack, 48.84WH

(**Factory Option**) 6 Cell Smart Lithium-Ion Battery Pack, 62.16WH

Dimensions & Weight

374mm (w) * 250mm (d) * 25 - 37.2mm (h)

2.6kg with ODD & 48.84WH Battery

External Locator - Top View with LCD Panel Open

Figure 1
Top View

1. Built-In PC Camera (**optional**)
2. LCD
3. Power Button
4. GPU Button
5. LED Indicators
6. Hot Key Buttons
7. Keyboard
8. Built-In Microphone
9. Touchpad & Buttons
10. Fingerprint Reader (**optional**)

External Locator - Front & Right Side Views

FRONT VIEW

Figure 2
Front View

1. LED Indicators

RIGHT SIDE VIEW

Figure 3
Right Side View

1. Headphone-Out Jack
2. Microphone-In Jack
3. S/PDIF-Out Jack
4. USB 2.0 Port
5. Optical Device Drive Bay
6. Emergency Eject Hole

External Locator - Left Side & Rear View

Figure 4
Left Side View

1. External Monitor Port
2. RJ-45 LAN Jack
3. HDMI-Out Port
4. 2 * USB 2.0 Ports
5. Vent
6. eSATA Port
7. USB 3.0 Port or USB 2.0 Port (Note: It depends on your purchase confirguration)
8. 3-in-1 Card Reader

LEFT SIDE VIEW

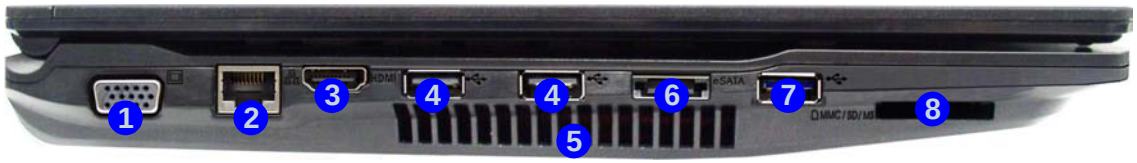

Figure 5
Rear View

1. Security Lock Slot
2. Battery
3. DC-In Jack

REAR VIEW

External Locator - Bottom View

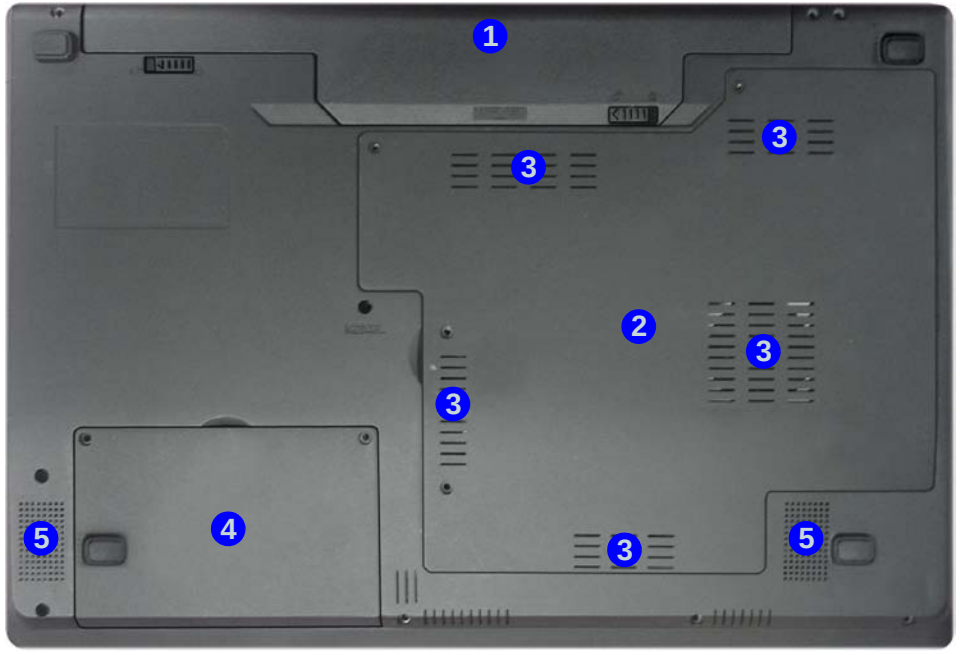

Figure 6
Bottom View

1. Battery
2. Component Bay Cover
3. Vent
4. Hard Disk Bay Cover
5. Speakers

Overheating

To prevent your computer from overheating, make sure nothing blocks any vent while the computer is in use.

Mainboard Overview - Top (Key Parts)

Figure 7
Mainboard Top Key Parts

1. JMC251
2. KBC-ITE IT8502E
3. Clock Generator
4. Azalia Codec
5. USIM Card

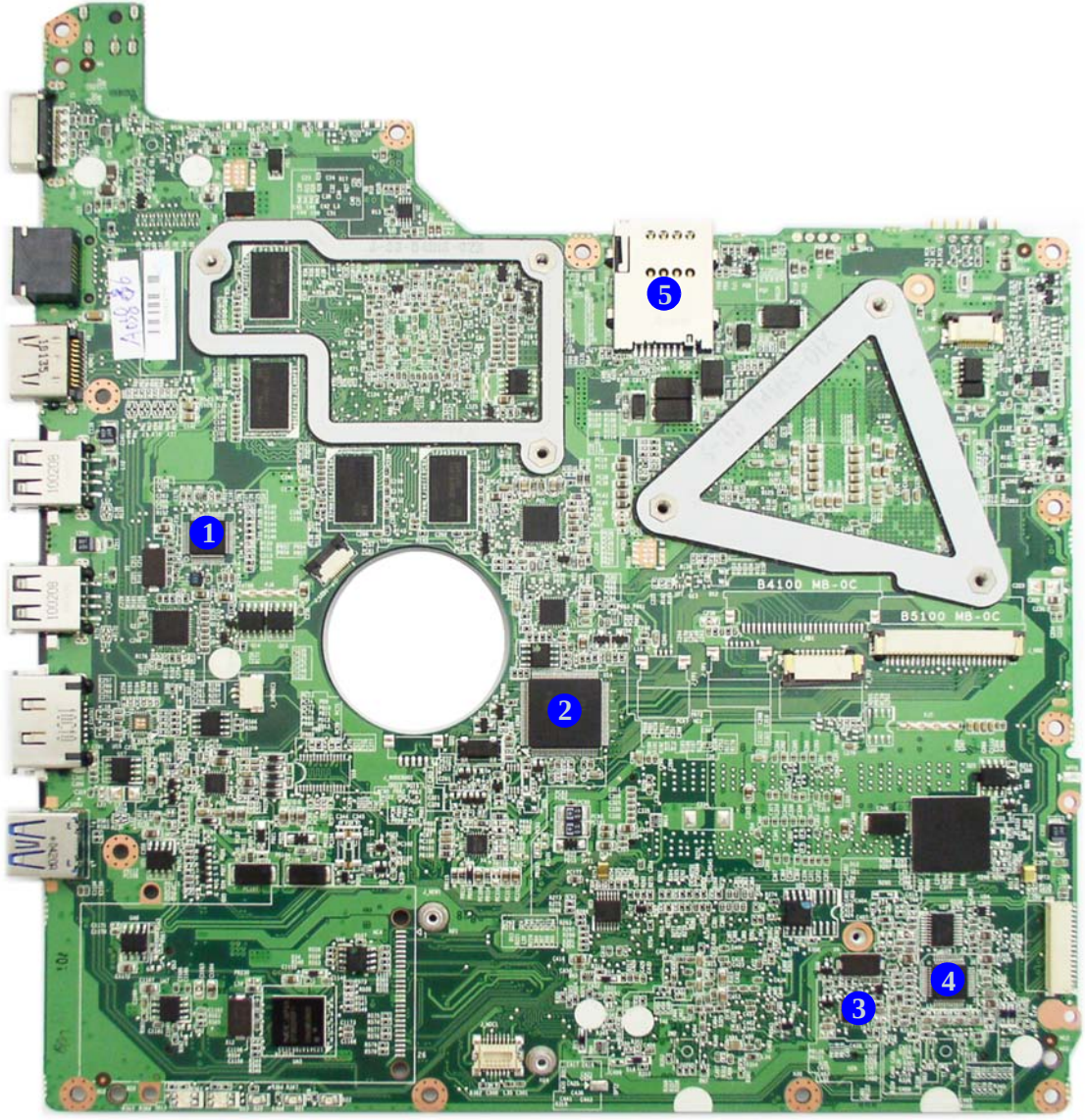

Mainboard Overview - Bottom (Key Parts)

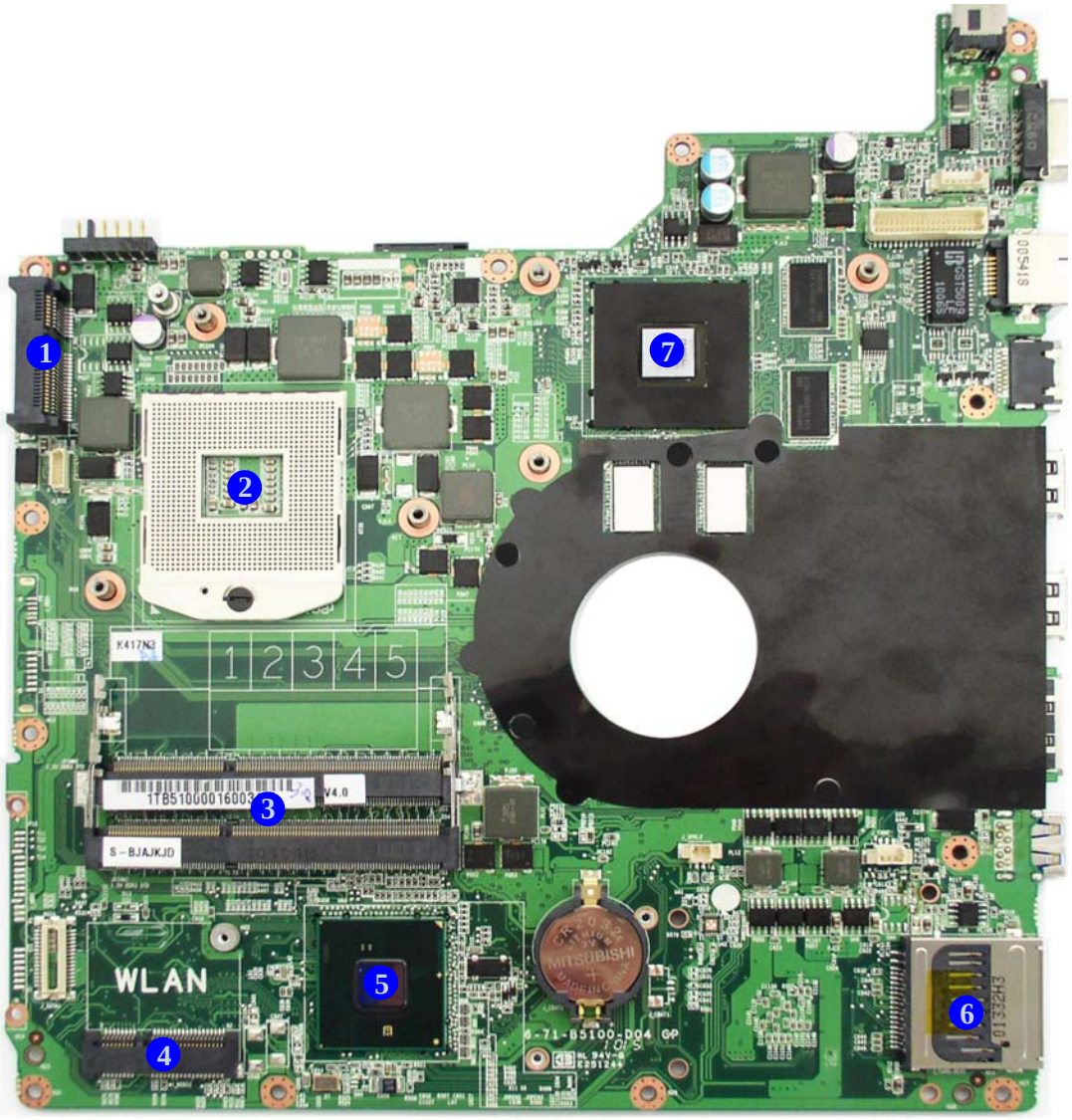

Figure 8
Mainboard Bottom Key Parts

1. Mini-Card Connector (3.5G Module)
2. CPU Socket (no CPU installed)
3. Memory Slots DDR3 SO-DIMM
4. Mini-Card Connector (WLAN Module)
5. Platform Controller Hub
6. 3-in-1 Card Reader
7. VGA

Mainboard Overview - Top (Connectors)

Figure 9
Mainboard Top Connectors

1. External Monitor Port
2. RJ-45 LAN Jack
3. HDMI-Out Port
4. USB Ports
5. eSATA Port
6. Microphone Cable Connector
7. MDC Connector
8. Audio Board Connector
9. Fingerprint and TouchPad Cable Connector
10. Keyboard Cable Connector
11. Switch Board Cable Connector

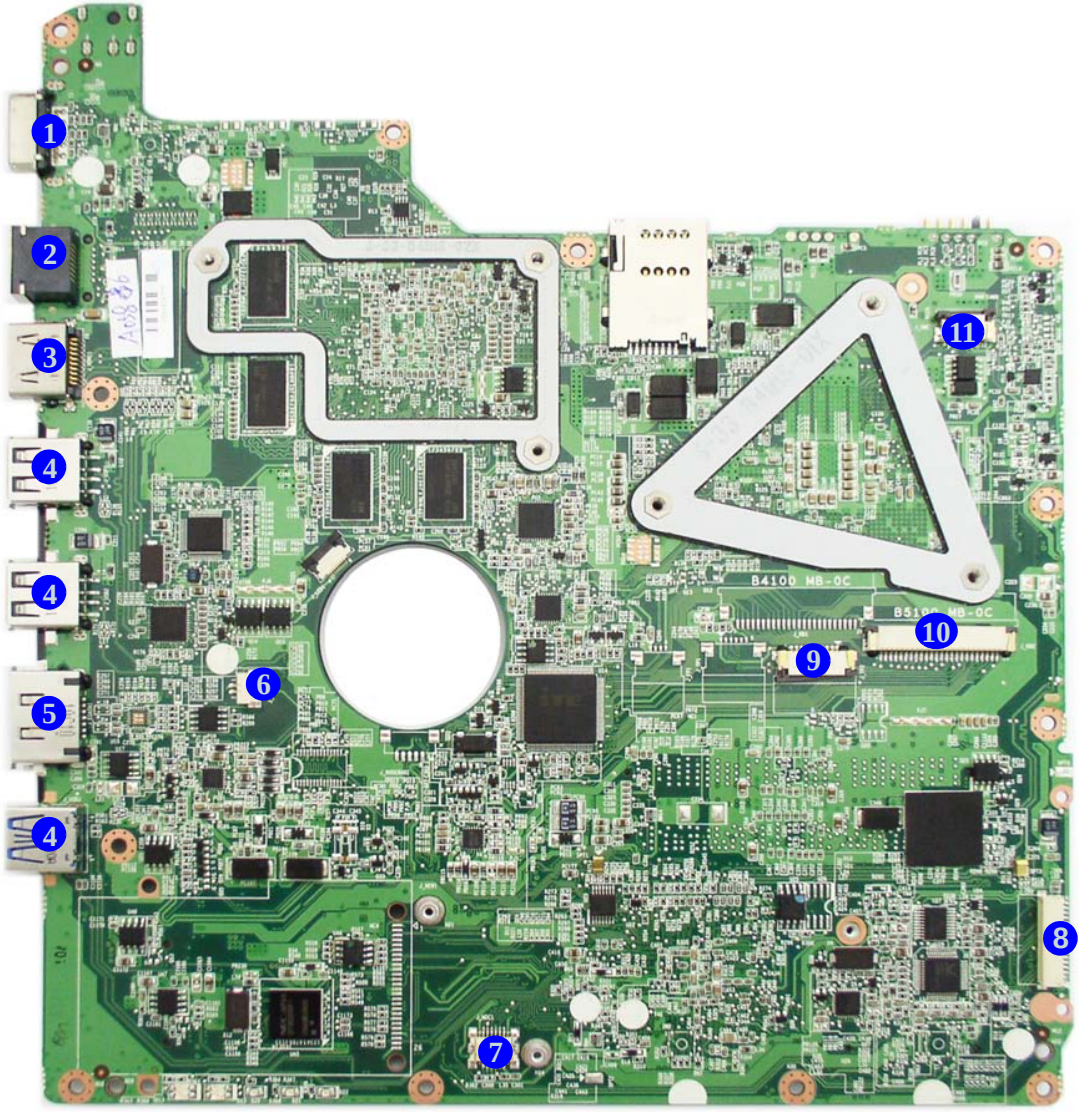

Mainboard Overview - Bottom (Connectors)

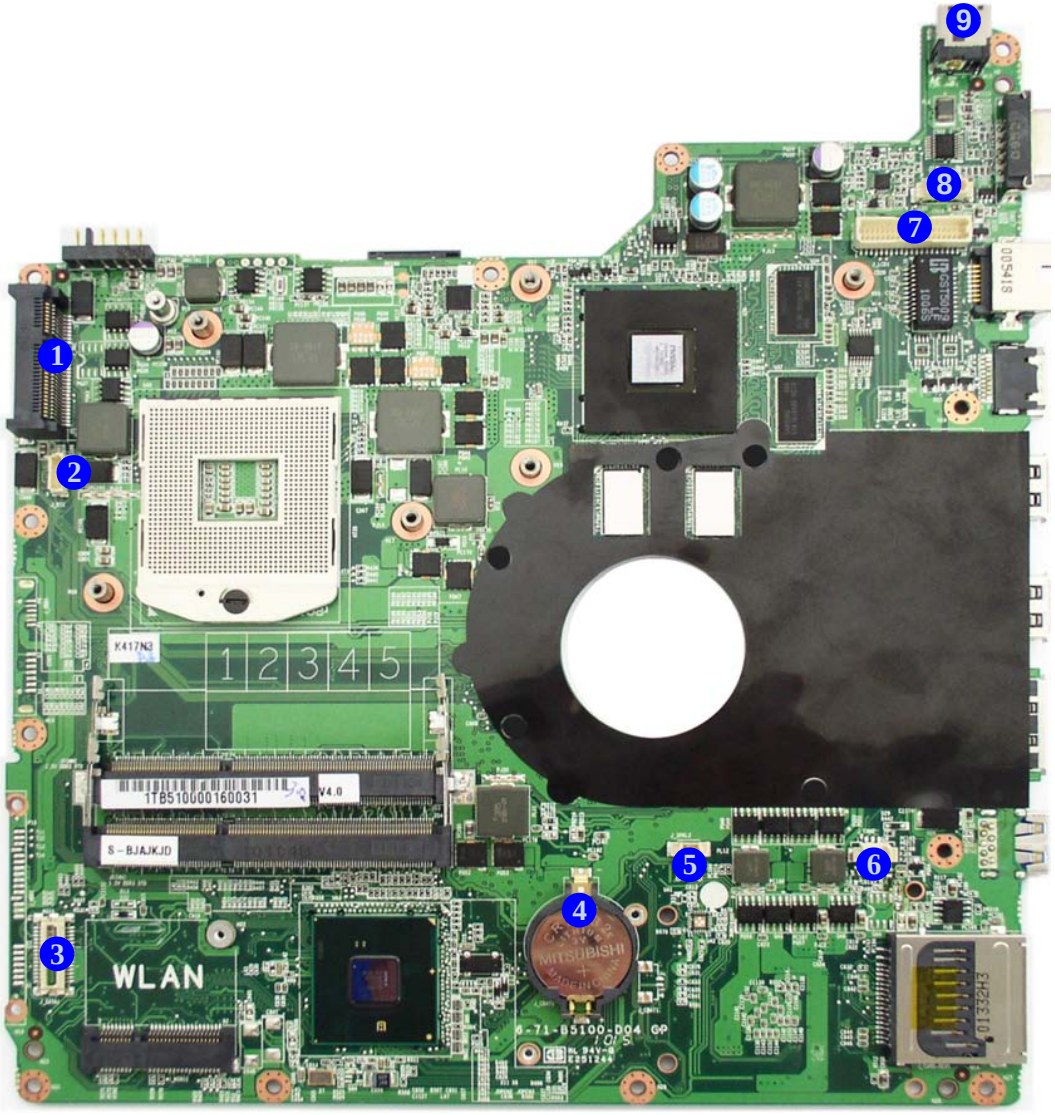

Figure 10
Mainboard Bottom Connectors

1. 3G Connector
2. Bluetooth Cable Connector
3. HDD & ODD Connector
4. CMOS Battery Connector
5. Speaker Cable Connector
6. CPU Fan Cable Connector
7. LCD Cable Connector
8. CCD Cable Connector
9. DC-In Jack

Chapter 2: Disassembly

Overview

This chapter provides step-by-step instructions for disassembling the ***B5130M*** series notebook's parts and subsystems. When it comes to reassembly, reverse the procedures (unless otherwise indicated).

We suggest you completely review any procedure before you take the computer apart.

Procedures such as upgrading/replacing the RAM, optical device and hard disk are included in the User's Manual but are repeated here for your convenience.

To make the disassembly process easier each section may have a box in the page margin. Information contained under the figure # will give a synopsis of the sequence of procedures involved in the disassembly procedure. A box with a lists the relevant parts you will have after the disassembly process is complete. **Note**: The parts listed will be for the disassembly procedure listed ONLY, and not any previous disassembly step(s) required. Refer to the part list for the previous disassembly procedure. The amount of screws you should be left with will be listed here also.

A box with a will also provide any possible helpful information. A box with a contains warnings.

An example of these types of boxes are shown in the sidebar.

Information

Warning

NOTE: All disassembly procedures assume that the system is turned **OFF**, and disconnected from any power supply (the battery is removed too).

Maintenance Tools

The following tools are recommended when working on the notebook PC:

- M3 Philips-head screwdriver
- M2.5 Philips-head screwdriver (magnetized)
- M2 Philips-head screwdriver
- Small flat-head screwdriver
- Pair of needle-nose pliers
- Anti-static wrist-strap

Connections

Connections within the computer are one of four types:

Locking collar sockets for ribbon connectors	To release these connectors, use a small flat-head screwdriver to gently pry the locking collar away from its base. When replacing the connection, make sure the connector is oriented in the same way. The pin1 side is usually not indicated.
Pressure sockets for multi-wire connectors	To release this connector type, grasp it at its head and gently rock it from side to side as you pull it out. Do not pull on the wires themselves. When replacing the connection, do not try to force it. The socket only fits one way.
Pressure sockets for ribbon connectors	To release these connectors, use a small pair of needle-nose pliers to gently lift the connector away from its socket. When replacing the connection, make sure the connector is oriented in the same way. The pin1 side is usually not indicated.
Board-to-board or multi-pin sockets	To separate the boards, gently rock them from side to side as you pull them apart. If the connection is very tight, use a small flat-head screwdriver - use just enough force to start.

Maintenance Precautions

The following precautions are a reminder. To avoid personal injury or damage to the computer while performing a removal and/or replacement job, take the following precautions:

1. **Don't drop it**. Perform your repairs and/or upgrades on a stable surface. If the computer falls, the case and other components could be damaged.
2. **Don't overheat it**. Note the proximity of any heating elements. Keep the computer out of direct sunlight.
3. **Avoid interference**. Note the proximity of any high capacity transformers, electric motors, and other strong magnetic fields. These can hinder proper performance and damage components and/or data. You should also monitor the position of magnetized tools (i.e. screwdrivers).
4. **Keep it dry**. This is an electrical appliance. If water or any other liquid gets into it, the computer could be badly damaged.
5. **Be careful with power**. Avoid accidental shocks, discharges or explosions.
   - Before removing or servicing any part from the computer, turn the computer off and detach any power supplies.
   - When you want to unplug the power cord or any cable/wire, be sure to disconnect it by the plug head. Do not pull on the wire.
6. **Peripherals** – Turn off and detach any peripherals.
7. **Beware of static discharge**. ICs, such as the CPU and main support chips, are vulnerable to static electricity. Before handling any part in the computer, discharge any static electricity inside the computer. When handling a printed circuit board, do not use gloves or other materials which allow static electricity buildup. We suggest that you use an anti-static wrist strap instead.
8. **Beware of corrosion**. As you perform your job, avoid touching any connector leads. Even the cleanest hands produce oils which can attract corrosive elements.
9. **Keep your work environment clean**. Tobacco smoke, dust or other air-born particulate matter is often attracted to charged surfaces, reducing performance.
10. **Keep track of the components**. When removing or replacing any part, be careful not to leave small parts, such as screws, loose inside the computer.

Power Safety Warning

Before you undertake any upgrade procedures, make sure that you have turned off the power, and disconnected all peripherals and cables (including telephone lines). It is advisable to also remove your battery in order to prevent accidentally turning the machine on.

Cleaning

Do not apply cleaner directly to the computer, use a soft clean cloth.
Do not use volatile (petroleum distillates) or abrasive cleaners on any part of the computer.

Disassembly Steps

The following table lists the disassembly steps, and on which page to find the related information. **PLEASE PERFORM THE DISASSEMBLY STEPS IN THE ORDER INDICATED.**

To remove the Battery:

1. Remove the battery *page 2 - 5*

To remove the HDD:

1. Remove the battery *page 2 - 5*
2. Remove the HDD *page 2 - 6*

To remove the System Memory:

1. Remove the battery *page 2 - 5*
2. Remove the system memory *page 2 - 8*

To remove the Optical Device:

1. Remove the battery *page 2 - 5*
2. Remove the HDD *page 2 - 6*
3. Remove the Optical device *page 2 - 10*

To remove and install a Processor:

1. Remove the battery *page 2 - 5*
2. Remove the processor *page 2 - 11*
3. Install the processor *page 2 - 13*

To remove the Wireless LAN Module:

1. Remove the battery *page 2 - 5*
2. Remove the wireless LAN *page 2 - 14*

To remove the Bluetooth Module:

1. Remove the battery *page 2 - 5*
2. Remove the Bluetooth *page 2 - 15*

To remove the Keyboard:

1. Remove the battery *page 2 - 5*
2. Remove the keyboard *page 2 - 16*

To remove the LCD Back Cover:

1. Remove the battery *page 2 - 5*
2. Remove the LCD back cover *page 2 - 17*

Removing the Battery

1. Turn the computer **off**, and turn it over.
2. Slide the latch 1 in the direction of the arrow (***Figure 1a***).
3. Slide the latch 2 in the direction of the arrow, and hold it in place (***Figure 1a***).
4. Slide the battery 3 in the direction of the arrow 4 (***Figure 1b***).

Figure 1
Battery Removal

a. Slide the latch and hold in place.
b. Slide the battery in the direction of the arrow.

a.

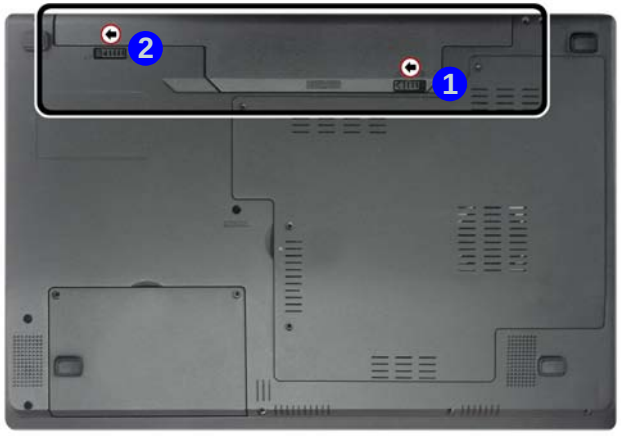

b.

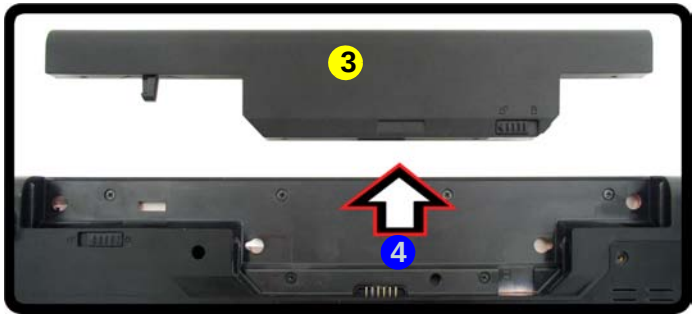

3. Battery

Removing the Hard Disk Drive

Figure 2
HDD Assembly Removal

The hard disk drive can be taken out to accommodate other 2.5" serial (SATA) hard disk drives with a height of 9.5mm (h). Follow your operating system's installation instructions, and install all necessary drivers and utilities (as outlined in **Chapter 4 of the User's Manual**) when setting up a new hard disk.

a. Locate the HDD bay cover and remove the screws.

Hard Disk Upgrade Process

1. Turn **off** the computer, and remove the battery (*page 2 - 5*).
2. Locate the hard disk bay cover and remove screws 1 & 2 (*Figure 2a*).

a.

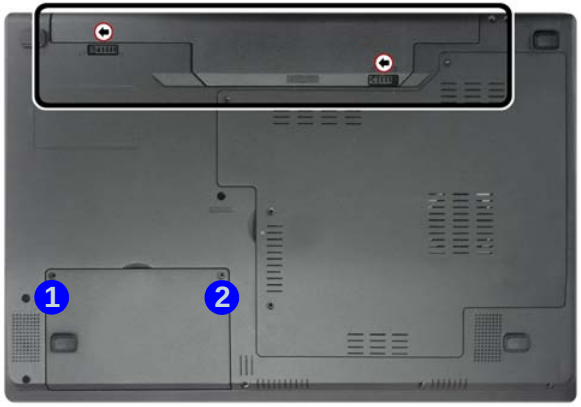

- 2 Screws

HDD System Warning

New HDD's are blank. Before you begin make sure:

You have backed up any data you want to keep from your old HDD.

You have all the CD-ROMs and FDDs required to install your operating system and programs.

If you have access to the internet, download the latest application and hardware driver updates for the operating system you plan to install. Copy these to a removable medium.

3. Remove the hard disk bay cover 3 (*Figure 3b*).
4. Grip the mylar cover and slide the hard disk in the direction of arrow 4 (*Figure 3c*).
5. Lift the hard disk 5 out of the bay 6 (*Figure 3d*).
6. Remove the screws 7 - 10 and the adhesive mylar cover 11 from the hard disk 5 (*Figure 3e*).
7. Reverse the process to install a new hard disk (do not forget to replace all the screws and covers).

b.

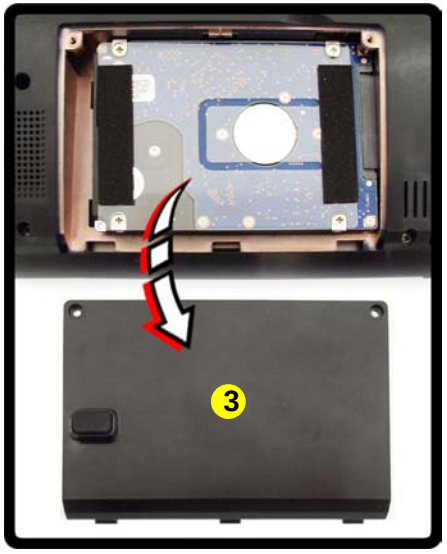

d.

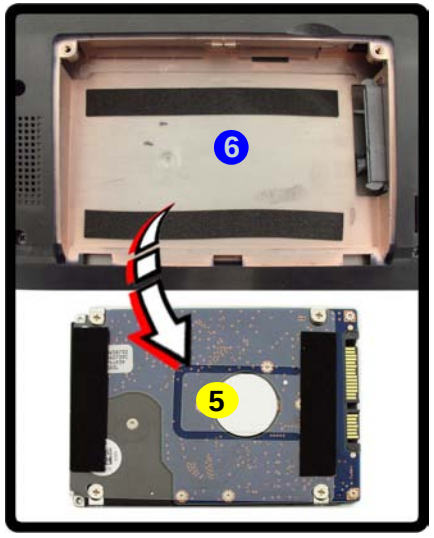

e.

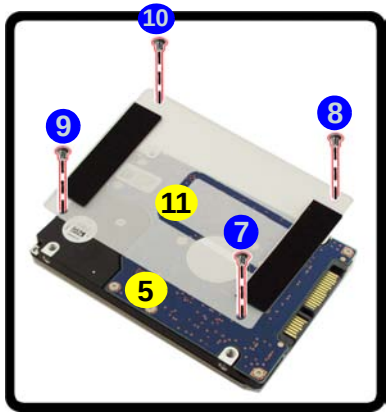

c.

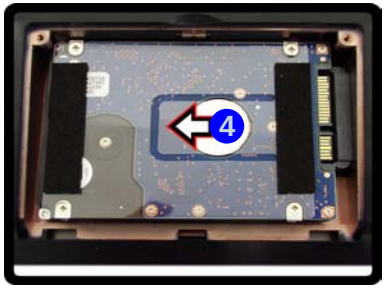

Figure 3
HDD Assembly Removal (cont'd.)

b. Remove the HDD bay cover.
c. Grip the mylar cover and slide the HDD in the direction of the arrow.
d. Lift the HDD assembly out of the bay.
e. Remove the screws and adhesive cover.

3. HDD Bay Cover
5. HDD
11. Adhesive Mylar Cover

- 4 Screws

Figure 4
RAM Module Removal

a. Remove the screws.
b. Disconnect the fan cable and remove the bay cover.

Removing the System Memory (RAM)

The computer has two memory sockets for 204 pin Small Outline Dual In-line Memory Modules (SO-DIMM) supporting DDR3 1066MHz. The main memory can be expanded up to 8GB. The SO-DIMM modules supported are 1024MB, and 2048MB and **DDRIII** Modules. The total memory size is automatically detected by the POST routine once you turn on your computer.

Contact Warning

Be careful not to touch the metal pins on the module's connecting edge. Even the cleanest hands have oils which can attract particles, and degrade the module's performance.

1. Component Bay Cover

- 4 Screws

Memory Upgrade Process

1. Turn **off** the computer, remove the battery (*page 2 - 5*).
2. Locate the component bay cover 1, and remove screws 2 - 5 (*Figure 4a*).
3. Carefully (**a fan and cable are attached to the under side of the cover**) lift up the bay cover.
4. Carefully disconnect the fan cable 6, and remove the cover 1 (*Figure 4b*).

a.

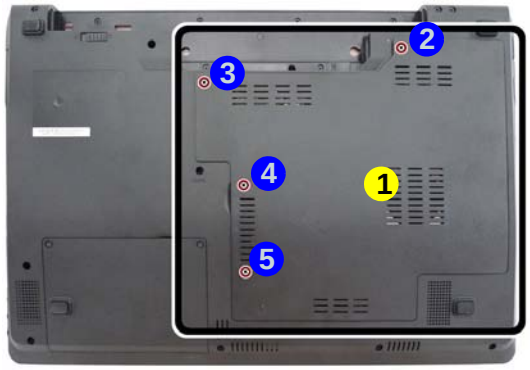

b.

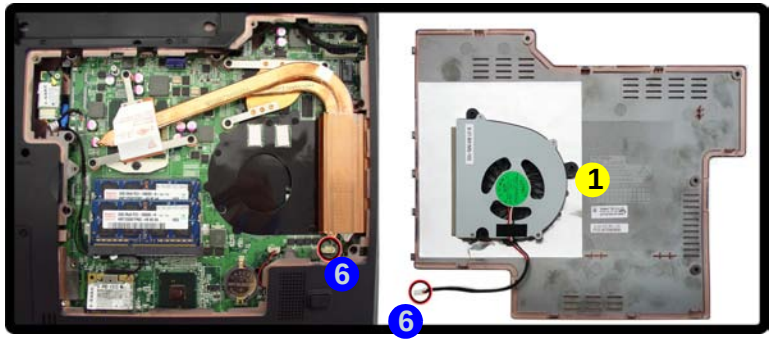

5. Gently pull the two release latches (7 - 8) on the sides of the memory socket in the direction indicated by the arrows (***Figure 5c***).

c.

d.

e.

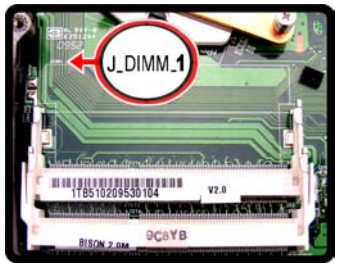

6. The RAM module 9 will pop-up (***Figure 5d***), and you can then remove it.
7. Pull the latches to release the second module if necessary (***Figure 5c***).
8. Insert a new module holding it at about a 30° angle and fit the connectors firmly into the memory slot.
9. The module's pin alignment will allow it to only fit one way. Make sure the module is seated as far into the slot as it will go. DO NOT FORCE the module; it should fit without much pressure.
10. Press the module in and down towards the mainboard until the slot levers click into place to secure the module.
11. Replace the bay cover and screws (**make sure you reconnect the fan cable before screwing down the bay cover**).
12. Restart the computer to allow the BIOS to register the new memory configuration as it starts up.

Figure 5
RAM Module Removal (cont'd.)

c. Pull the release latches.
d. Remove the module.

Single Memory Module Installation

If your computer has a single memory module, then insert the module into the **Channel 0 (J_DIMM_1)** socket. In this case, this is the lower memory socket (the socket closest to the mainboard) as shown in ***Figure 5e***.

9. RAM Module

Figure 6
Optical Device Removal

a. Remove the screw.
b. Push the optical device out off the computer at point 3.

Removing the Optical (CD/DVD) Device

1. Turn **off** the computer, remove the battery (***page 2 - 5***) and hard disk (***page 2 - 6***).
2. Remove the screw at point 1 (***Figure 6a***), and use a screwdriver to carefully push out the optical device 2 at point 3 (***Figure 6b***).
3. Insert the new device and carefully slide it into the computer (the device only fits one way. DO NOT FORCE IT; The screw holes should line up).
4. Restart the computer to allow it to automatically detect the new device.

a.

b.

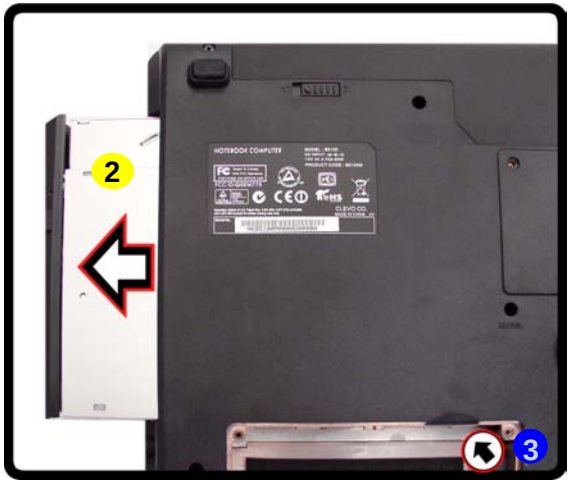

2. Optical Device

- 1 Screw

Removing and Installing the Processor

Processor Removal Procedure

1. Turn **off** the computer, remove the battery (*page 2 - 5*) and the component bay cover (*page 2 - 8*).
2. The CPU heat sink will be visible at point A (*Figure 7a*) on the mainboard.
3. Remove screws 6, 5, 4, 3, 2, 1 (*Figure 7b*), the reverse order indicated on the label.
4. Carefully lift up the heat sink B (*Figure 7c*) off the computer.

Figure 7
Processor Removal

a. Remove the cover and locate the heat sink.
b. Remove the screws in the order indicated.
c. Remove the heat sink.

a.

c.

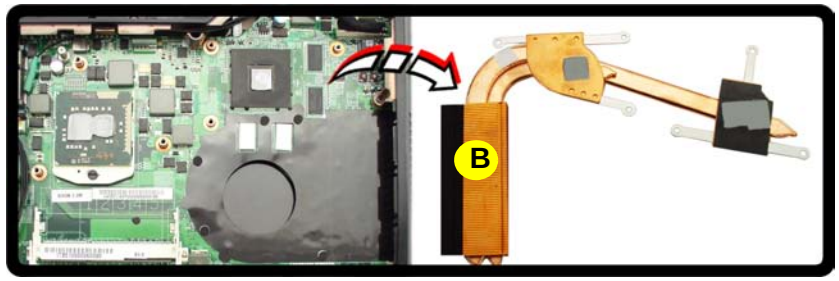

b.

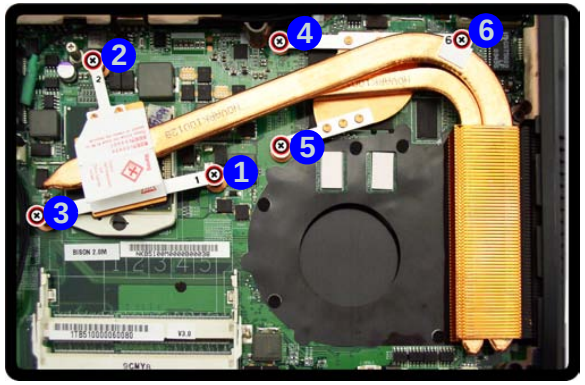

B. Heat Sink

- 6 Screws

Figure 8
Processor Removal (cont'd)

d. Turn the release latch to unlock the CPU.
e. Lift the CPU out of the socket.

5. Turn the release latch C towards the unlock symbol 🔓, to release the CPU (***Figure 8d***).
6. Carefully (it may be hot) lift the CPU D up out of the socket (***Figure 8e***).
7. See ***page 2 - 13*** for information on inserting a new CPU.
8. When re-inserting the CPU, pay careful attention to the pin alignment, it will fit only one way (DO NOT FORCE IT!).

d.

e.

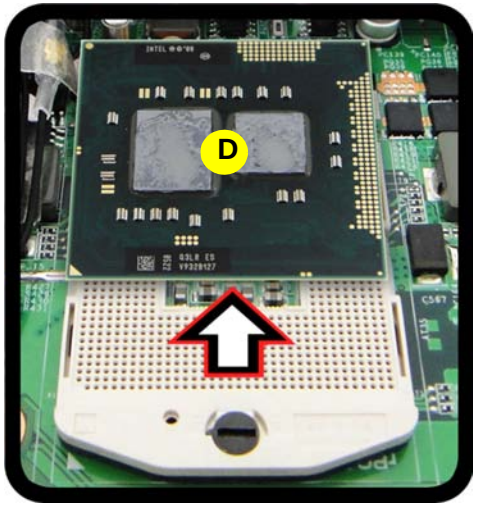

D. CPU

Caution

The heat sink, and CPU area in general, contains parts which are subjected to high temperatures. Allow the area time to cool before removing these parts.

Processor Installation Procedure

1. Insert the CPU A (*Figure 9a*), pay careful attention to the pin alignment, it will fit only one way (DO NOT FORCE IT!), and turn the release latch B towards the lock symbol 🔒 (*Figure 9b*).
2. **Remove the stickers** C (*Figure 9c*) from the heat sink.
3. Insert the heat sink D as indicated in (*Figure 9c*).
4. Replace and tighten the screws 1 - 6 (*Figure 9d*) in the order indicated on the label.
5. Replace the component bay cover and screws (*page 2 - 8*).

Figure 9
Processor Installation

a. Insert the CPU.
b. Turn the release latch towards the lock symbol.
c. Remove the stickers from the heat sink and insert the heat sink.
d. Replace and tighten the screws in the order indicated on the label.

a.

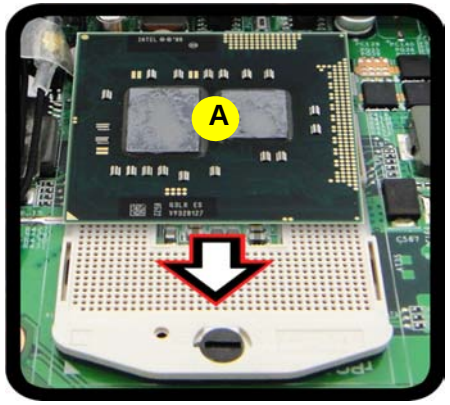

c.

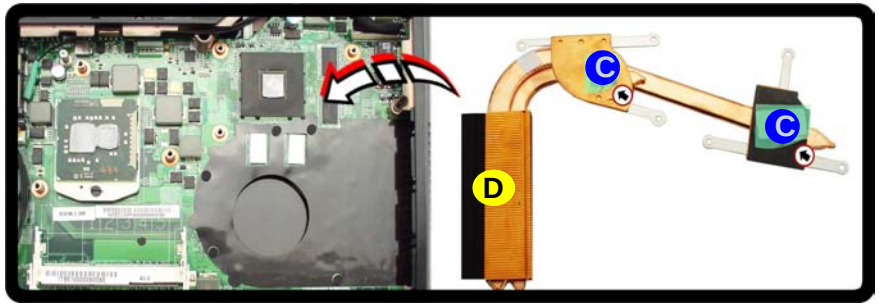

b.

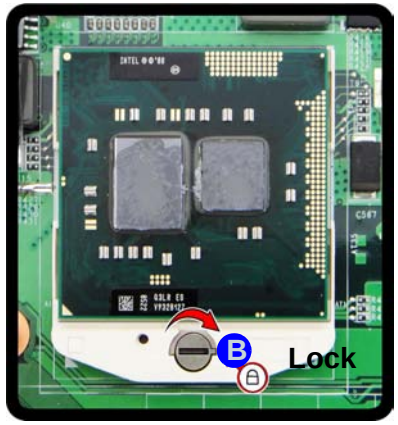

d.

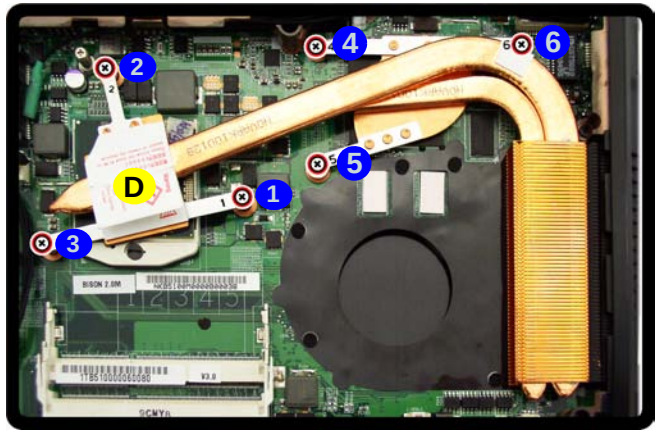

A. CPU
D. Heat Sink

- 6 Screws

Figure 10
Wireless LAN Module Removal

a. The WLAN module will be visible at point 1.
b. Disconnect the cables and remove the screw.
c. The WLAN module will pop up.
d. Lift the WLAN module out.

Note: Make sure you reconnect the antenna cable to ''1'' + ''2''socket (***Figure b***).

5. WLAN Module.

- 1 Screw

Removing the Wireless LAN Module

1. Turn **off** the computer, remove the battery (***page 2 - 5***) and the component bay cover (***page 2 - 8***).
2. The Wireless LAN module will be visible at point 1 (***Figure 10a***) on the mainboard.
3. Carefully disconnect cables 2 - 3, then remove screw 4 from the module socket (***Figure 10b***).
4. The Wireless LAN module 5 (***Figure 10c***) will pop-up.
5. Lift the Wireless LAN module (***Figure 10d***) up and off the computer.

a.

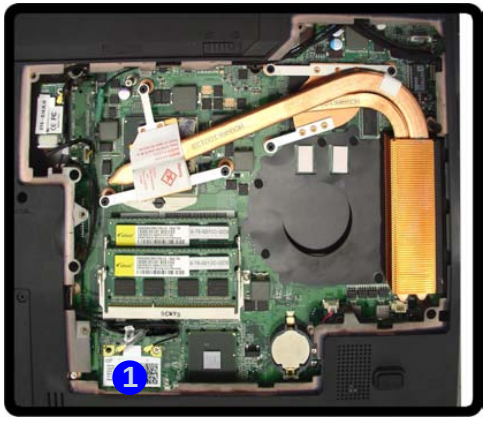

b.

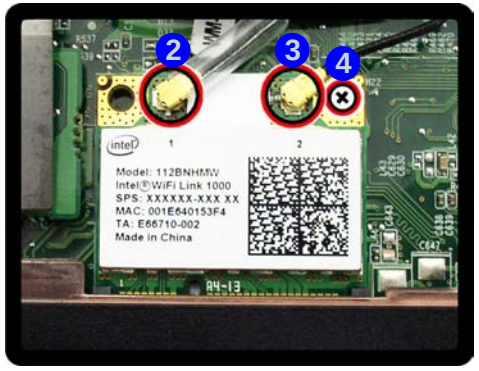

c.

d.

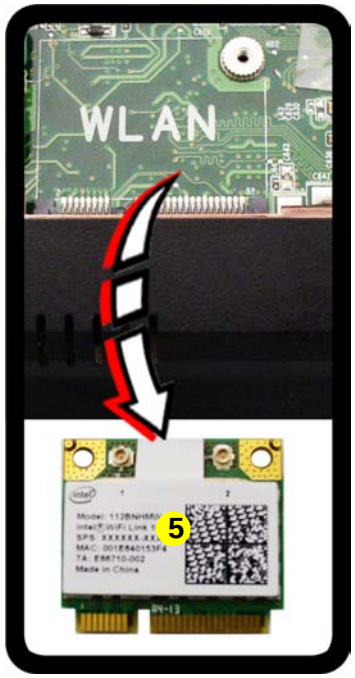

Removing the Bluetooth Module

1. Turn **off** the computer, remove the battery (*page 2 - 5*) and the component bay cover (*page 2 - 8*.
1. Locate the Bluetooth module at point 1 (*Figure 11a*).
2. Remove screw 2 and carefully disconnect the Bluetooth module from the connector 3 and the cable 4 (*Figure 11b*).
3. Lift the Bluetooth module 5 (*Figure 11c*) up and off the computer.

a.

b.

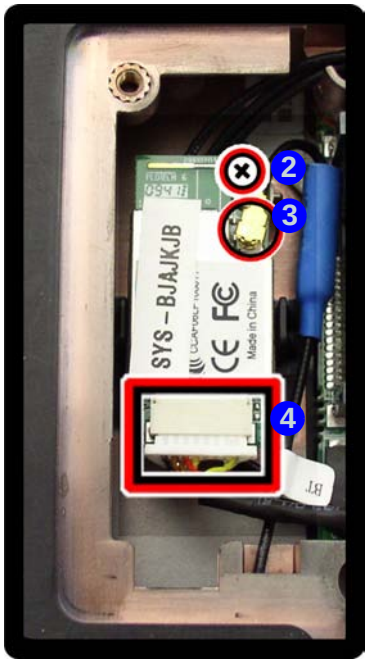

c.

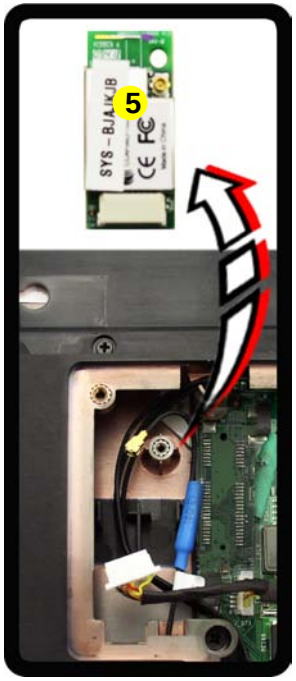

Figure 11
Bluetooth Module Removal

a. Locate the Bluetooth module at point 1.
b. Remove the screw and carefully disconnect the connector and the cable.
c. Lift the Bluetooth module up and off the socket.

5. Bluetooth Module

- 1 Screw

Figure 12
Keyboard Removal

a. Remove the screws and use a screwdriver to carefully push out the top cover module at point 3.
b. Remove the top cover module.
c. Remove the screws.
d. Lift the keyboard up and disconnect the cable from the locking collar.
e. Remove the keyboard.

Removing the Keyboard

1. Turn **off** the computer and remove the battery (***page 2 - 5***).
2. Remove the screws 1 - 2 and use a screwdriver to carefully push out the top cover module 4 at point 3 (***Figure 12a***).
3. Remove the top cover module 4 (***Figure 12b***) and the screws 5 - 9 (***Figure 12c***),
4. Carefully lift the keyboard 10 up, being careful not to bend the keyboard ribbon cable (***Figure 12d***).
5. Disconnect the keyboard ribbon cable 11 from the locking collar socket 12 (***Figure 12d***).
6. Carefully lift up the keyboard 10 (***Figure 12e***) off the computer.

a.

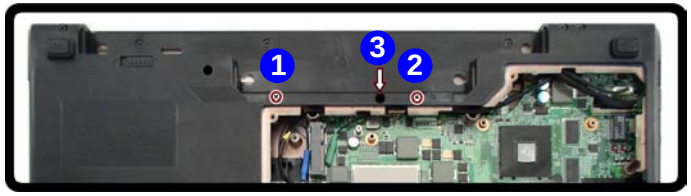

b.

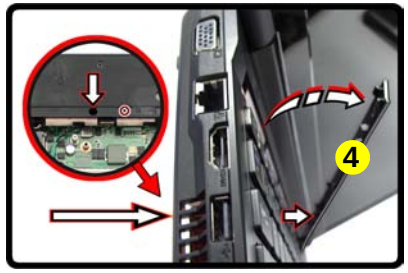

c.

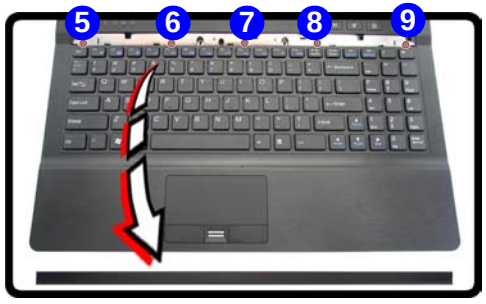

d.

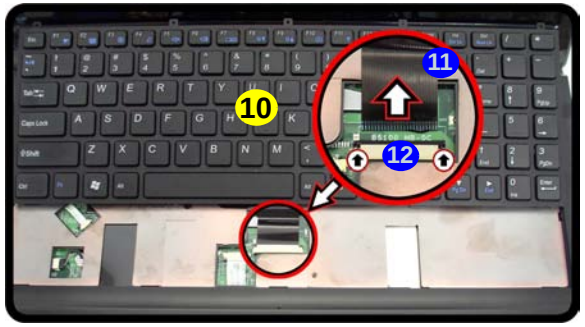

e.

4. Top cover module
10. Keyboard

- 7 Screws

Removing the LCD Back Cover (B5130M)

1. Turn **off** the computer, and turn the computer over to remove the battery (***page 2 - 5***).
2. Open the LCD and carefully remove the upper rubber screw covers 1 & 2 (2 corner rubber screw covers only) and set them aside (***Figure 13a***).
3. Remove screws 3 & 4 from the front cover (***Figure 13a***).
4. Carefully slide the cover forward in the direction of the arrows 5 & 6 as illustrated below (***Figure 13b***).
5. Remove the LCD back cover 7 (***Figure 13c***).

Figure 13
LCD Back Cover Removal (B5130M)

a. Remove the rubber covers and screws.
b. Slide the cover forward.
c. Remove the LCD back cover.

a.

b.

c.

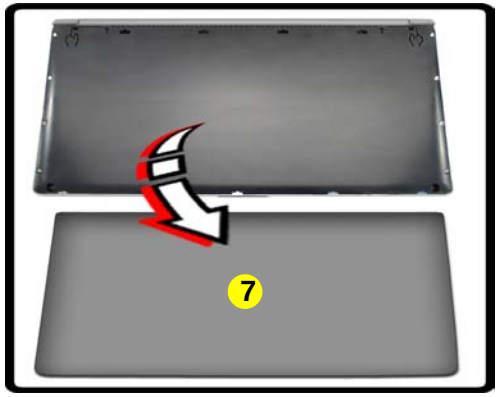

Rubber Screw Covers

After removing the rubber screw covers, place them on a clean dry surface (or attach them to the front cover itself) in order to prevent loss of adhesive.

7. LCD Back Cover

- 2 Screws

Appendix A:Part Lists

This appendix breaks down the ***B5130M*** series notebook's construction into a series of illustrations. The component part numbers are indicated in the tables opposite the drawings.

Note: This section indicates the *manufacturer's* part numbers. Your organization may use a different system, so be sure to cross-check any relevant documentation.

Note: Some assemblies may have parts in common (especially screws). However, the part lists DO NOT indicate the total number of duplicated parts used.

Note: Be sure to check any update notices. The parts shown in these illustrations are appropriate for the system at the time of publication. Over the product life, some parts may be improved or re-configured, resulting in *new* part numbers.

Part List Illustration Location

The following table indicates where to find the appropriate part list illustration.

Table A - 1
Part List Illustration Location

Part	B5130M
Top with Fingerprint	*page A - 3*
Top without Fingerprint	*page A - 4*
Bottom	*page A - 5*
LCD	*page A - 6*
SATA DVD Super-Multi	*page A - 7*
SATA Blu-Ray Combo	*page A - 8*

Top with Fingerprint

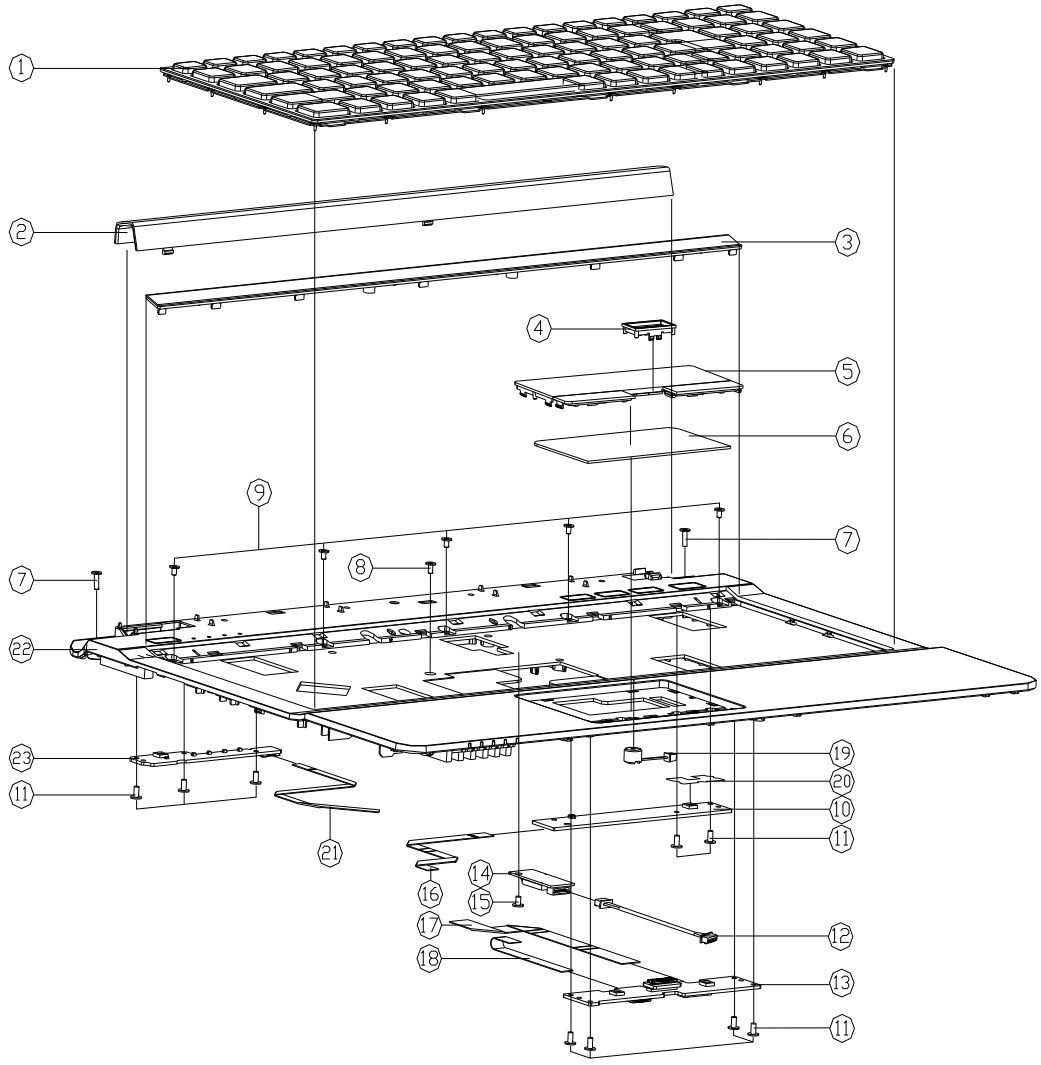

ITEM	PART NAME	PART NO	REMARK
1	K/B USA (黑色)& FRAME (US) MODULE B5100M	6-79-B5100M0K-013	
2	HINGE COVER (PC+ABS) B5100M	6-42-B51M8-031	
3	KB COVER (PC+ABS) B5100M	6-42-B51M8-021	
4	FP COVER (PC+ABS) B5100M	6-42-B51M2-0D1	
5	TP COVER MODULE WT-FP B5100M	6-42-B51M2-500	
6	TOUCH PAD SYNAPTICS TM-0146-003 MULTI-GESTURE C4800	6-49-C4802-010	
7	SCREW M2.5*8L KI BK/Z NY ICT	6-35-B6125-8R0	
8	SCREW M2.5*5L KI BK/Z ICT NY	6-35-B6125-5RA	
9	SCREW M2*3L KI BZ ICT NY (OD=Ø4.5,DT=0.4)	6-35-B6120-3RD	
10	POWER SWITCH BOARD V3.0 B5100M	6-77-B510S-D03	
11	SCREW M2*4L KI NI ICT NY (OD=Ø4.0,DT=0.5)	6-35-B1120-4RA	
12	WIRE CABLE 6PIN W/B TO 8PIN BLUETOOTH MODULE FOR W76JS	6-43-M76SB-011	
13	CLICK BOARD V4.0+FINGERPRINT SENSOR BOARD V2.0 ASSY B5130M	6-77-B510A-N04-A	
14	BLUETOOTH V2.1 BICOM2200 單頻藍 8 PIN LCCA CSR BCM AUT (4X2.9) V1H NC BT	6-88-M77C5-5300	
14	BLUETOOTH V3.0 WIMCOM4 藍天互通 17PIN LCC CSR BCM AUT WIN NC 8 STRAIGHT AUTO NC WIFI	6-88-M73T5-3901	
15	#(非極性)SCREW M2*2L KI NI ICT GIY-PATCH (OD=Ø4.0,DT=0.8)	6-35-B1120-3RD	
16	FFC POWER BD TO MB (PITCH=0.5,12PIN)(X,H) B5100M	6-43-B51M0-032	
17	FFC CLICK TO MB (PITCH=1.0,10PIN) (,H) B5100M	6-43-B51M0-011	
18	FFC CABLE FOR TOUCH PAD 6PIN C4500	6-43-C4502-010-1	
19	MIC GMM3509M035-FOL-0 INV2V 22K W/CABLE(灰色) L=160MM M556G	6-23-EM55G-011	
20	MYLAR PWR BD B5100M	6-40-B51MS-030	
21	FFC VGA BD TO MB (PITCH=0.5,10PIN) (,H) B5130M	6-43-B5130-021	
22	TOP CASE MODULE B5130M	6-39-B5132-010	
23	LED & VGA SWITCH BOARD V1.0 B5130M	6-77-B5134-D01	

Figure A - 1
Top with Fingerprint

Top without Fingerprint

Figure A - 2
Top without Fingerprint

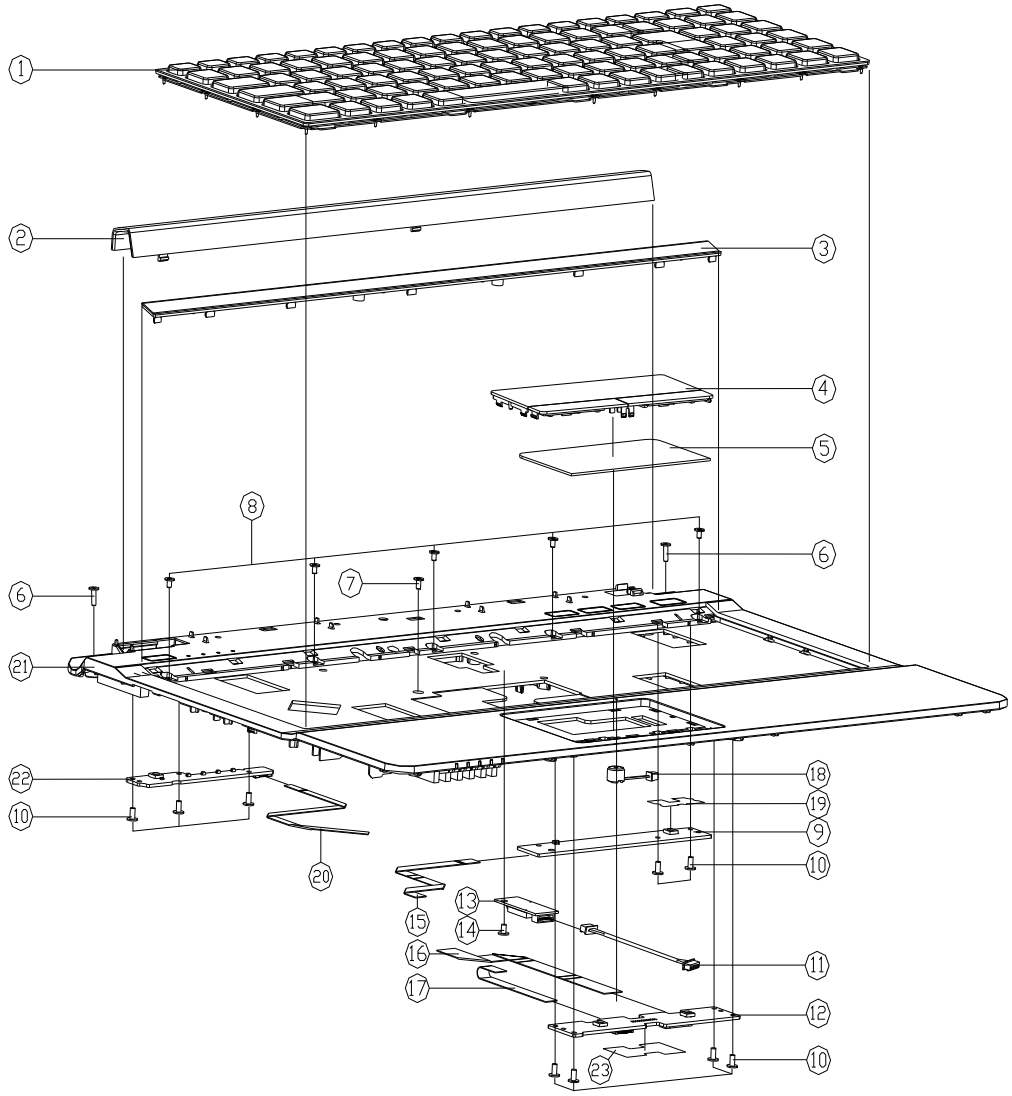

ITEM	PART NAME	PART NO	REMARK
1	K/B USA (黑色)& FRAME (US) MODULE B5100M	6-79-B5100MOK-013	
2	HINGE COVER (PC+ABS) B5100M	6-42-B51M8-031	
3	KB COVER (PC+ABS) B5100M	6-42-B51M8-021	
4	TP COVER MODULE WO-FP B5100M	6-42-B51M2-600	
5	TOUCH PAD SYNAPTICS TM-01146-003 MULTI-GESTURE C4800	6-49-C4802-010	
6	SCREW M2.5*8L K1 BK/Z NY ICT	6-35-B6125-8R0	
7	SCREW M2.5*5L K1 BK/Z ICT NY	6-35-B6125-5RA	
8	SCREW M2*3L K1 BZ ICT NY (DD=Ø4.5,DT=0.4)	6-35-B6120-3RD	
9	POWER SWITCH BOARD V3.0 B5100M	6-77-B510S-D03	
10	SCREW M2*4L K1 NI ICT NY (DD=Ø4.0,DT=0.5)	6-35-B1120-4RA	
11	WIRE CABLE 6PIN W/B TO 8PIN BLUETOOTH MODULE FOR M76S6S	6-43-M76SB-011	
12	CLICK BOARD V4.0(W/O FP) B5100M	6-77-B5102-D04-1	
13	BLUETOOTH V2.1 BTCOM2B2U 蓝牙板后8 PIN USB CSR BCM AU 4M29 WITH NO, B1	6-88-M77C5-5300	
13	BLUETOOTH V3.0 BM3D0H1G 蓝牙板后8 PIN USB CSR BCM AU WITH NO, B1 SOFTWARE NO MIC (AU)	6-88-M73T5-3901	
14	*(非拆卸)SCREW M2*3L K1 NI ICT GIY-PATCH (DD=Ø4.0,DT=0.8)	6-35-B1120-3RD	
15	FFC POWER BD TO MB (PITCH=0.5,12PIN)(X,H) B5100M	6-43-B51M0-032	
16	FFC CLICK TO MB (PITCH=1.0,10PIN) (,H) B5100M	6-43-B51M0-011	
17	FFC CABLE FOR TOUCH PAD 6PIN C4500	6-43-C4502-010-1	
18	MIC 6MM DSEM6ZS-FDL-U 1W/2V 2.2K W/CABLE(灰色) L=140MM MT301	6-23-EM55G-011	
19	MYLAR PWR BD B5100M	6-40-B51MS-030	
20	FFC VGA BD TO MB (PITCH=0.5,10PIN) (,H) B5130M	6-43-B5130-021	
21	TOP CASE MODULE B5130M	6-39-B5132-010	
22	LED & VGA SWITCH BOARD V1.0 B5130M	6-77-B5134-D01	
23	MYLAR CLK BD WO-FP B5100M	6-40-B51MS-010	

Bottom

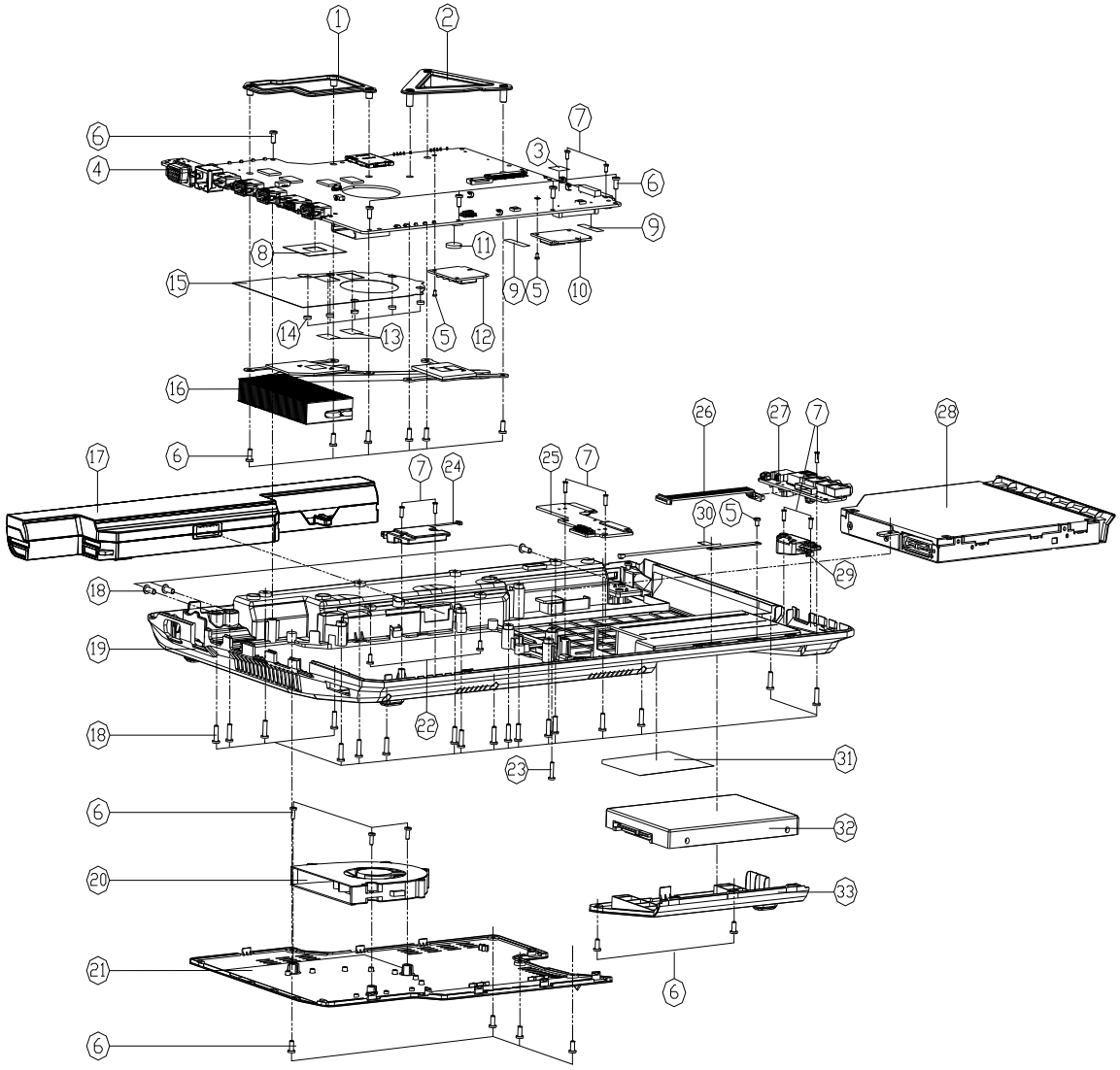

ITEM	PART NAME	PART NO	REMARK
1	VGA SUPPORTER SECC B4100M(CANCEL RIB)	6-33-B41MS-022	
2	CPU SUPPORTER SECC B4100M	6-33-B41MS-011	
3	AUDIO BOARD MYLAR 20×20×0.15T (黑色,PET+3M 467) C4500	6-40-C450S-030	
4	MAIN BOARD V2.0(USB 2.0 W/3G) B5130M	6-77-B5130-D02	
4	MAIN BOARD V2.0(USB 2.0 W/O 3G) B5130M	6-77-B5130-D02-1	
4	MAIN BOARD V2.0(USB 3.0 W/3G) B5130M	6-77-B5130-D02-2	
4	MAIN BOARD V2.0(USB 3.0 W/O 3G) B5130M	6-77-B5130-D02-3	
5	M.F.SCREW SCREW M2×2, K1 Ni ICT SPI-PAD(OD=Φ4.0,H=0.8)	6-35-B1120-3RD	
6	SCREW M2.5×5L K1 BK/Z ICT NY	6-35-B6125-5RA	
7	SCREW M2×4L K1 Ni ICT NY (OD=Φ4.0,H=0.5)	6-35-B1120-4RA	
8	VGA CHIP MYLAR (30×30) N89P-GE2 M860TU	6-40-M860S-090	
9	TAPE MYLAR (C),MYLAR M550J	6-40-M55J2-030	
10	[illegible]	6-88-W76C2-7001	(OPTION)
10	[illegible]	6-88-M77C2-4200	(OPTION)
10	[illegible]	6-88-M77C2-4210	(OPTION)
10	WLAN XAVI XW774E 802.11BG(N HALF MINI-CARD)	6-88-W76C2-8702	(OPTION)
11	BATTERY 3V 210MA CR2032 (MITSUBISHI)	6-23-62015-607	
12	[illegible] USB 3.0 S110W	6-88-S110W-8810	(OPTION)
13	THERMAL PAD FOR M/B VRAM (13×7.5×0.2) B4100M	6-48-B41MS-011	
14	LCD FRONT COVER RUBBER SILICON (OD=4.5MM)	6-47-W76S1-030	
15	MYLAR FOR FAN THERMAL B4100M	6-40-B41MS-010	
16	HEAT SINK B4100M (DVT MODIFY)	6-31-B41MN-013	
17	WIRE S LI 10V/4.4A(W/R)8A(H) 32CP SMV/BK 900B280T C4800	6-87-C480S-4P42	(OPTION)
17	WIRE S LI 10V/4.4A(W/R)8A(H) 32CP MIX/LI/DEN 5F8280T8A02 C4800	6-87-C480S-4G41	(OPTION)
17	WIRE S LI 10V/5.6A(W/R)28A(H) 32CP SMV/SW 900B2K0CF E4920	6-87-E412S-4D7	(OPTION)
17	WIRE S LI 10V/4.4A(W/R)8A(H) 32CP CPU/BK 9R8S0000E E4920	6-87-E412S-4Y4	(OPTION)
18	SCREW M2.5×8L K1 BK/Z NY ICT	6-35-B6125-8R0	
19	BOTTOM CASE MODULE B5100M (CHANGE)	6-39-B51M3-013	
20	FAN MODULE B4100M(MP DESIGN CHANGE)	6-31-B41MS-104	
21	CPU COVER MODULE B5100M	6-42-B51M3-102	
22	SCREW M2×4L K1 BZ ICT NY	6-35-B6120-4RA	
23	SCREW M2×8L K1 BK/Z ICT NY	6-35-B6120-8R0	
24	SPK+CABLE L 20□ 138 2.0V 4Ω 300M P2N12V(W)24L B4100	6-23-5B410-021	
25	ODD BRIDGE BOARD V3.0 B5130M	6-77-B510N-D03-A	
26	PHONE JACK TO M/B CABLE 16P(R) P1.0(H=3.0 L=[illegible])	6-43-B51M0-040	
27	PHONE JACK & USB BOARD V3.0(W/O SPDIF) B5130M	6-77-B410A-D03-B	
27	PHONE JACK & USB BOARD V3.0(W/O SPDIF) B5130M	6-77-B410A-D03-A	
28	SATA DVD SUPER MULTI ASS'Y (OPTION)	6-79-B5130M00-000	
28	SATA BLU-RAY COMBO ASS'Y (OPTION)	6-79-B5130M0W-020	
28	W/O ODD ASS'Y B5100M	6-79-B5100M0Z-000	
29	SPK+CABLE R 20□ 138 2.0V 4Ω 400M P2N12V B5100M	6-23-5B51M-010	
30	ANTENNA BLUETOOTH FVC B1 PCB 24G L=240MM B5100M	6-23-7B51M-011	
31	PRODUCT LABEL FOR B5130M	6-45-B5130M03-010	FOR USB2.0
31	PRODUCT LABEL FOR B5130M FOR USB 3.0	6-45-B5130M03-020	FOR USB3.0
32	W/ HDD ASS'Y B5100M	6-79-B5100M0J-020	
32	W/O HDD ASS'Y B5100M	6-79-B5100M0J-010	
33	HDD COVER MODULE B5100M	6-42-B51MJ-101	

Figure A - 3
Bottom

LCD

Figure A - 4
LCD

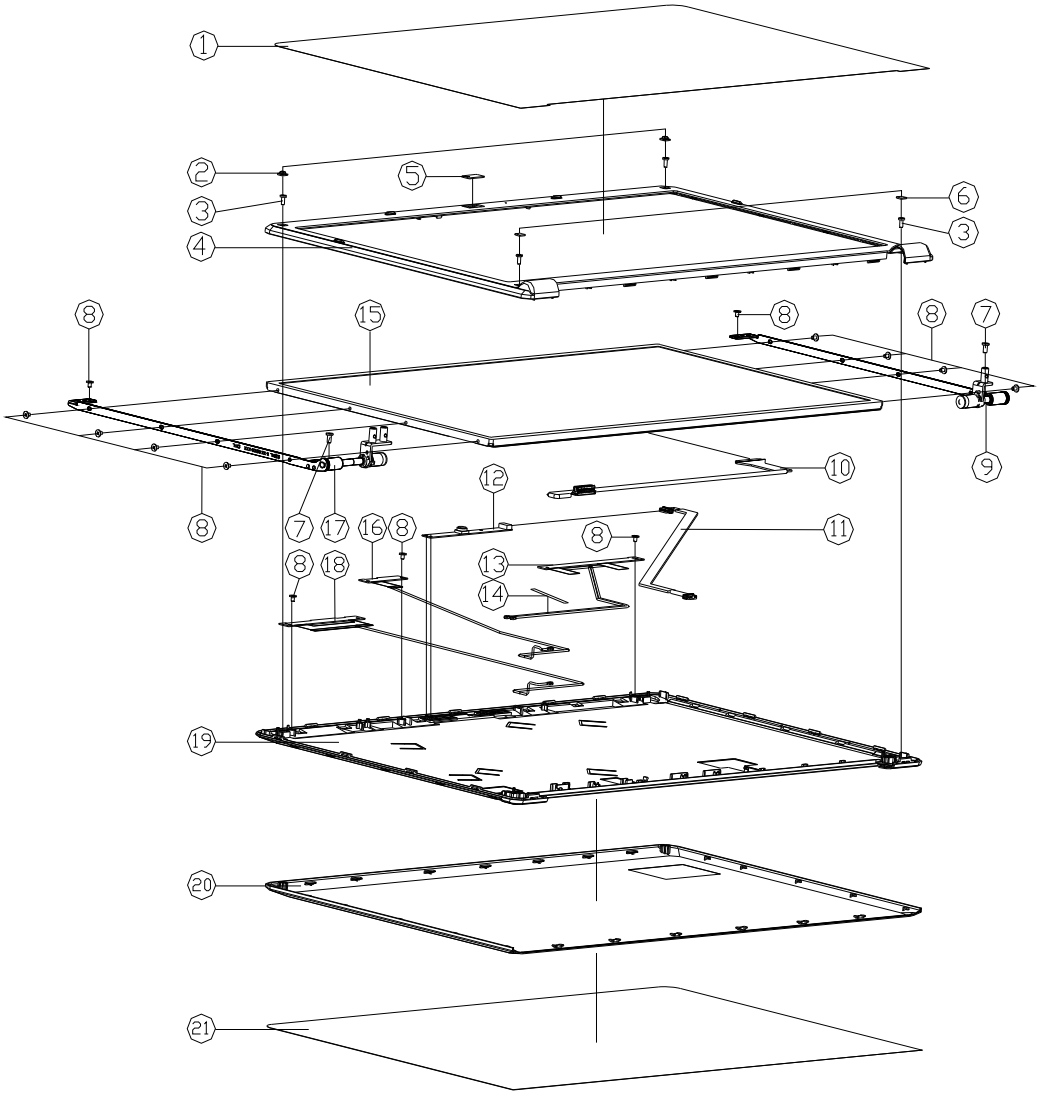

ITEM	PART NAME	PART NO	REMARK
1	LCD FRONT COVER PROTECTION MYLAR (PET+3M8915) B5100M	6-40-B51M8-010	
2	LCD FRONT COVER SCREW RUBBER SLICON C4500	6-47-C4501-031	
3	SCREW M2*5L KICT=0.8 D=4.0) BK/Z ICT NY	6-35-B6120-5R0	
4	LCD FRONT COVER MODULE B5100M	6-39-B51M1-012	
5	CCD 銘板 PMMA M810L	6-42-M8101-011	
5	W/O CCD COSMETIC PC M810L	6-42-M8101-020	
6	FRONT COVER PC FOR SCREW C4500	6-40-C4501-071	
7	SCREW M2.5*5L KI BK/Z ICT NY-	6-35-B6125-5RA	
8	*硅耐落)SCREW M2*3L KI NI ICT GTY-PATCH	6-35-B1120-3RE	
9	LCD HINGE R SK7 B5100M (CHOSIN)	6-33-B51M1-022-1	
10	LCD CABLE LVDS L:345MM, (HL/YD) B5100M	6-43-B51M1-010-A	
11	CCD CABLE L:336MM (HL) B5100M	6-43-B51MT-021	
12	UVC CAMERA BISON FIX BN20M6SA8-030_V1.0 1.3M 6AA M810L	6-88-M810C-4911	OPTION
12	UVC CAMERA CHICONY FIX CNF9121200329IL 1.3M DV9665 M740G	6-88-M74TC-5102	OPTION
12	UVC CAMERA BISON FIX BN28U5VA8-000 2M DV2655 W760S	6-88-W76SC-4900	OPTION
12	UVC CAMERA SIMPLO FIX COIPL005F 2M M740S	6-88-M740C-9010	OPTION
13	ANTENNA COMBO (WLAN+WIMAX BAND) WI = 800M , WM2 = 800M (FVC) B5100M	6-23-7B51M-031	
14	TAPE MYLAR (B),MYLAR M550J	6-40-M55J2-020	
15	LCD 15.6" HD+ LG LP156WD1-TLA1 GLARE TYPE	6-50-LA157-L00	OPTION
15	LCD 15.6" HD+ LG LP156WD1-TLA2 GLARE TYPE	6-50-LA157-L03	OPTION
15	LCD 15.6" FHD AU B156HW01 V0 (GLARE TYPE)	6-50-LB257-G01	OPTION
15	LCD 15.6" HD CHIMEI N156B6-L06 (GLARE TYPE) 5.5 MM (LED)	6-50-L8155-D00	OPTION
15	LCD 15.6" HD INNOLUX BT156GW02 V.0 5.5 MM	6-50-L8155-V02	OPTION
16	ANTENNA (WLAN+WIMAX BAND) WM3= 665MM (FVC) B5100M	6-23-7B51M-041	
17	LCD HINGE L SK7 B5100M (CHOSIN)	6-33-B51M1-032-1	
18	ANTENNA WCDMA PCB 3G 455MM (FVC) B5100M	6-23-7B51M-020	
19	MIDDLE COVER MODULE B5100M	6-39-B51M1-032	
20	LCD BACK COVER PC+ABS 7230P FOR MOFA B5100	A6-39-B51M1-02C	FOR MOFA
20	LCD BACK COVER MODULE B5100M	6-39-B51M1-022	FOR 一般漆
21	LCD BACK COVER PROTECTION MYLAR (PET+3M8915) B5100M	6-40-B51M8-020	ONLY FOR NORMAL PAINT

SATA DVD Super-Multi

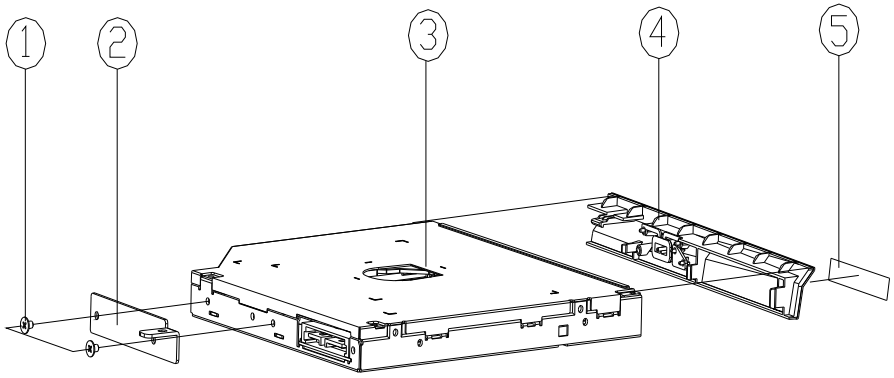

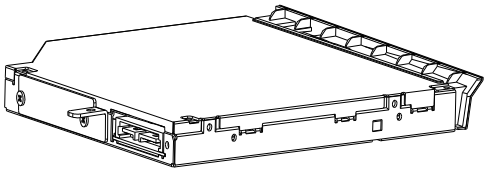

ITEM	PART NAME	PART NO	REMARK
1	M(手指部含)3CSCREW M2*3CL K1 N( )C1 GTY-PATCH (OD=4.0,DT=0.8)	6-35-B1120-3RD	
2	CD ROM BRACKET SECC (右側) M740S	6-33-M74SZ-012-1	
3	SATA DVD SUPER MULTI 5.1/4" DX 12.7MM GT32N ROM VER A(OD OUNDING 7 SUPPORT) HLDS	6-85-A078X-506	FOR HLDS
3	SATA DVD SUPER MULTI 5.1/4" DX 12.7MM RS-8H5S T/A-VA03 (WINDOWS 7, ZERO POWER) PLDS	6-85-A078X-L05	FOR PLDS
3	SATA DVD SUPER MULTI 5.1/4" DX 12.7MM TS-L633/H633 T/A TOSHIBA A VER (WINDOWS 7 SUPPORT) TSST	6-85-A078X-T09	FOR TSST
4	ODD BEZEL MODULE B5100M	6-42-B51MZ-102	
5	ODD BEZEL LABEL(SUPER MULTI) W760S (大之)	6-45-W76SZ-010-1	

Figure A - 5
SATA DVD Super-Multi

SATA Blu-Ray Combo

Figure A - 6
SATA Blu-Ray Combo

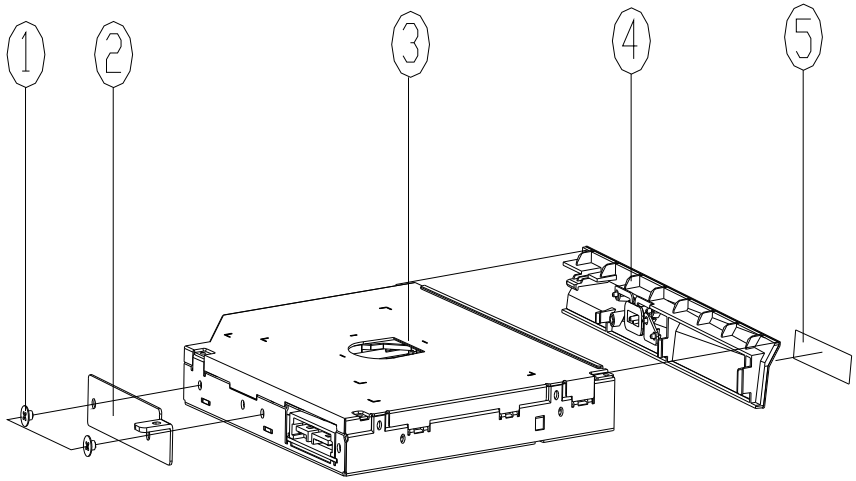

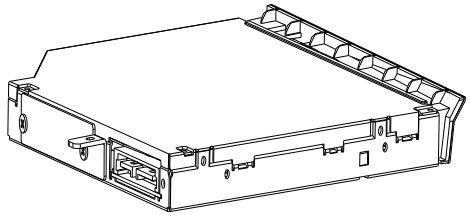

ITEM	PART NAME	PART NO	REMARK
1	×(寻)同寻器SECXEV M2×QL K1 N1 IC1 GTY-PATCH (OD=4×0.D1=0.8)	6-35-B1120-3RD	
2	CD ROM BRACKET SECC (志诚)青 M740S	6-33-M74SZ-012-1	
3	SATA BLU-RAY COMBO 5.1/4" 8X 12X/24X 8X/8X/8X PANASONIC 1.8-5.5V 7/9/12.5 MM (/F-LB) (WINBLK / SUPERB)	6-85-B076X-P10	
4	□DD BEZEL M□DULE B5100M	6-42-B51MZ-102	
5	□DD BEZEL LABEL(SUPER MULTI(BLU-RAY) W760S	6-45-W76SW-010-1	

Appendix B: Schematic Diagrams

This appendix has circuit diagrams of the ***B5100M*** notebook's PCB's. The following table indicates where to find the appropriate schematic diagram.

Table B - 1
SCHEMATIC DIAGRAMS

Diagram - Page	Diagram - Page	Diagram - Page
System Block Diagram - Page B - 2	*IBEXPEAK- M 1/9 - Page B - 20*	*5VS, 3.3VS, 1.5VS, VIN1 - Page B - 38*
Clock Generator - Page B - 3	*IBEXPEAK - M 2/9 - Page B - 21*	*VDD3, VDD5 - Page B - 39*
CPU 1/7 (DMI, PEG, FDI) - Page B - 4	*IBEXPEAK - M 3/9 - Page B - 22*	*Power 1.8V, PEX_VDD - Page B - 40*
CPU 2/7 (CLK, MISC, JTAG) - Page B - 5	*IBEXPEAK - M 4/9 - Page B - 23*	*Power 1.5V/0.75V - Page B - 41*
CPU 3/7 (DDR3) - Page B - 6	*IBEXPEAK - M 5/9 - Page B - 24*	*Power 1.1VS_VTT - Page B - 42*
CPU 4/7 (Power) - Page B - 7	*IBEXPEAK - M 6/9 - Page B - 25*	*Power VGFX_Core - Page B - 43*
CPU 5/7 (Graphics Power) - Page B - 8	*IBEXPEAK - M 7/9 - Page B - 26*	*V-Core - Page B - 44*
CPU 6/7 (GND) - Page B - 9	*IBEXPEAK - M 8/9 - Page B - 27*	*Power VGA NVVDD - Page B - 45*
CPU 7/7 (RESERVED) - Page B - 10	*IBEXPEAK - M 9/9 - Page B - 28*	*AC_IN, Charger - Page B - 46*
DDR3 SO-DIMM_0 - Page B - 11	*New Card, Mini PCIE - Page B - 29*	*HDMI - Page B - 47*
DDR3 SO-DIMM_1 - Page B - 12	*3G, CCD, TPM - Page B - 30*	*Audio Board - Page B - 48*
Panel, Inverter, CRT - Page B - 13	*USB, Fan, TP, FP, Multi-Conn - Page B - 31*	*B5100 Second HDD Board - Page B - 49*
VGA PCI-E Interface - Page B - 14	*USB 3.0 - Page B - 32*	*B5100 Click Board - Page B - 50*
VGA Frame Buffer Interface - Page B - 15	*JMC 251 Card Reader - Page B - 33*	*B5100 Fingerprint Board - Page B - 51*
VGA Frame Buffer A - Page B - 16	*SATA ODD, LED, Hotkey, LID SW - Page B - 34*	*B5100 Power Switch Board - Page B - 52*
VGA Frame Buffer C - Page B - 17	*RJ45, Modem - Page B - 35*	*B5100 LED & VGA SW Board - Page B - 53*
VGA I/O - Page B - 18	*Audio Codec ALC272 - Page B - 36*	*Sequence - Page B - 54*
VGA NVVDD Cecoupling - Page B - 19	*KBC-ITE IT8518 - Page B - 37*	

Version Note

The schematic diagrams in this chapter are based upon version 6-7P-B5107-002. If your mainboard (or other boards) are a later version, please check with the Service Center for updated diagrams (if required).

System Block Diagram

Sheet 1 of 53
System Block Diagram

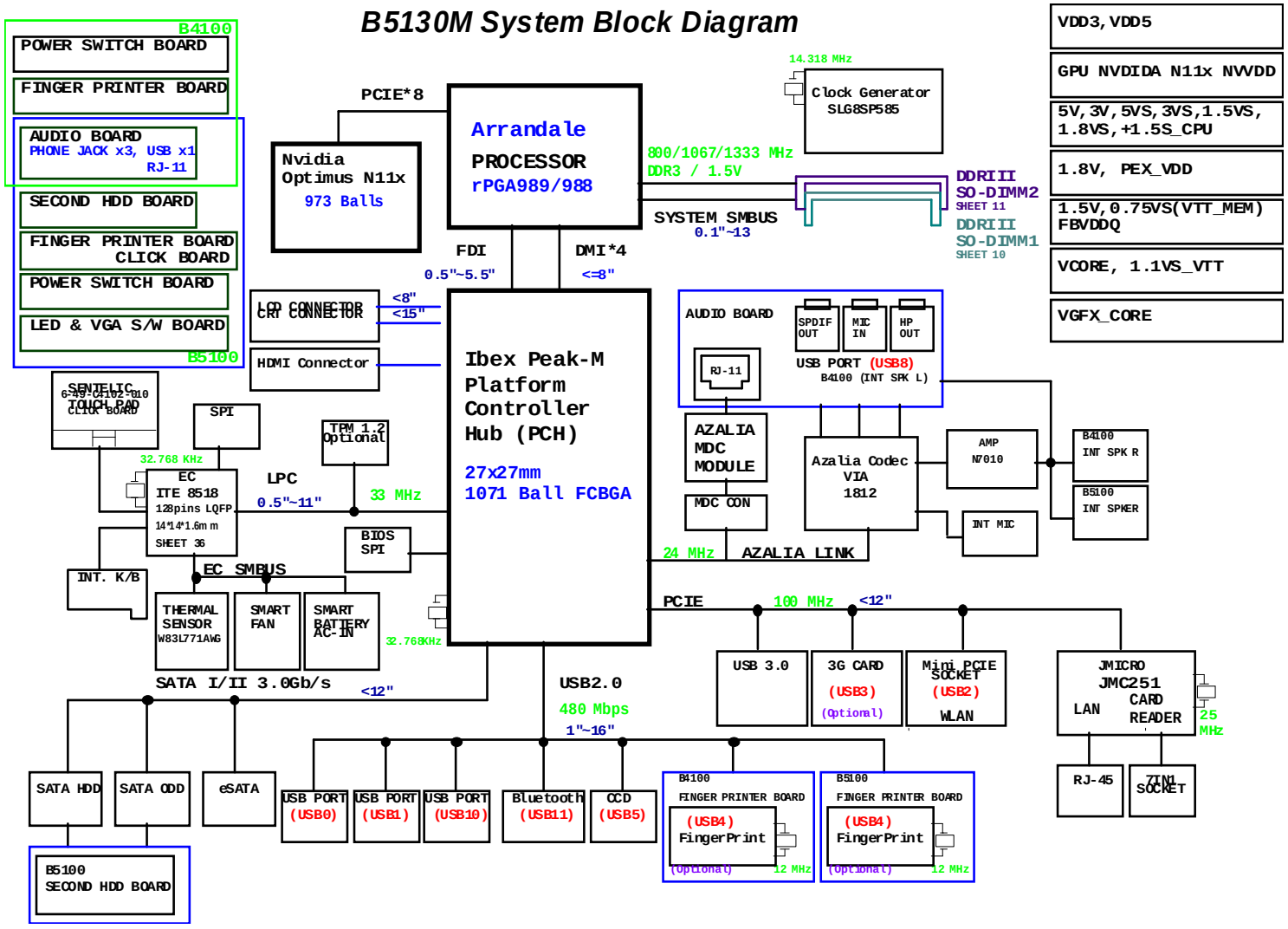

Clock Generator

CLOCK GENERATOR

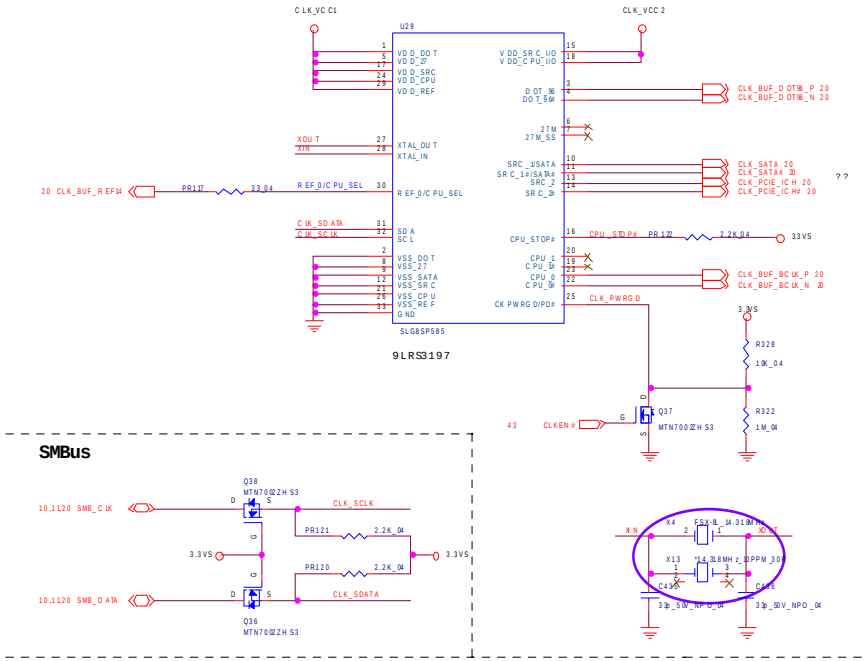

PIN_30	CPU_0	CPU_1
0(default)	133MHz	133MHz
1(0.7V-1.5V)	100MHz	100MHz

CLKGEN POWER

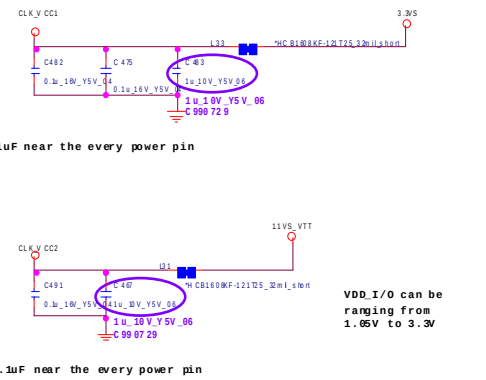

Sheet 2 of 53
Clock Generator

CPU 1/7 (DMI, PEG, FDI)

PROCESSOR 1/7 (DMI,PEG,FDI)

Sheet 3 of 53
CPU 1/7
(DMI, PEG, FDI)

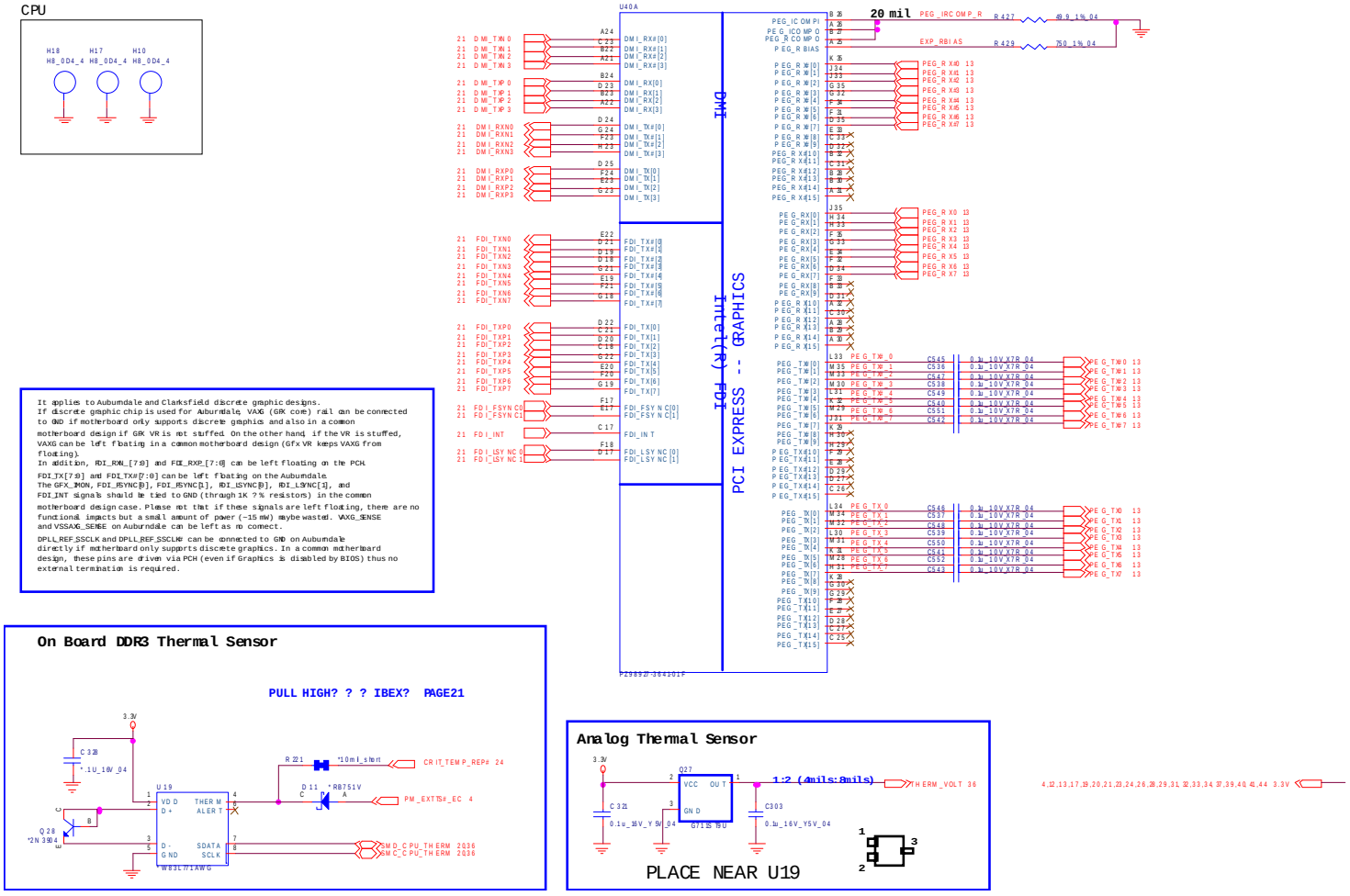

It applies to Auburndale and Clarksfield discrete graphic designs.
If discrete graphic chip is used for Auburndale, VAXG (GFX core) rail can be connected to GND if motherboard only supports discrete graphics and also in a common motherboard design if GFX VR is not stuffed. On the other hand, if the VR is stuffed, VAXG can be left floating in a common motherboard design (Gfx VR keeps VAXG from floating).
In addition, FDI_RXN_[7:0] and FDI_RXP_[7:0] can be left floating on the PCH.
FDI_TX[7:0] and FDI_TX#[7:0] can be left floating on the Auburndale.
The GFX_IMON, FDI_FSYNC[0], FDI_FSYNC[1], FDI_LSYNC[0], FDI_LSYNC[1], and FDI_INT signals should be tied to GND (through 1K ?% resistors) in the common motherboard design case. Please note that if these signals are left floating, there are no functional impacts but a small amount of power (~15 mW) maybe wasted. VAXG_SENSE and VSSAXG_SENSE on Auburndale can be left as no connect.
DPLL_REF_SSCLK and DPLL_REF_SSCLK# can be connected to GND on Auburndale directly if motherboard only supports discrete graphics. In a common motherboard design, these pins are driven via PCH (even if Graphics is disabled by BIOS) thus no external termination is required.

CPU 2/7 (CLK, MISC, JTAG)

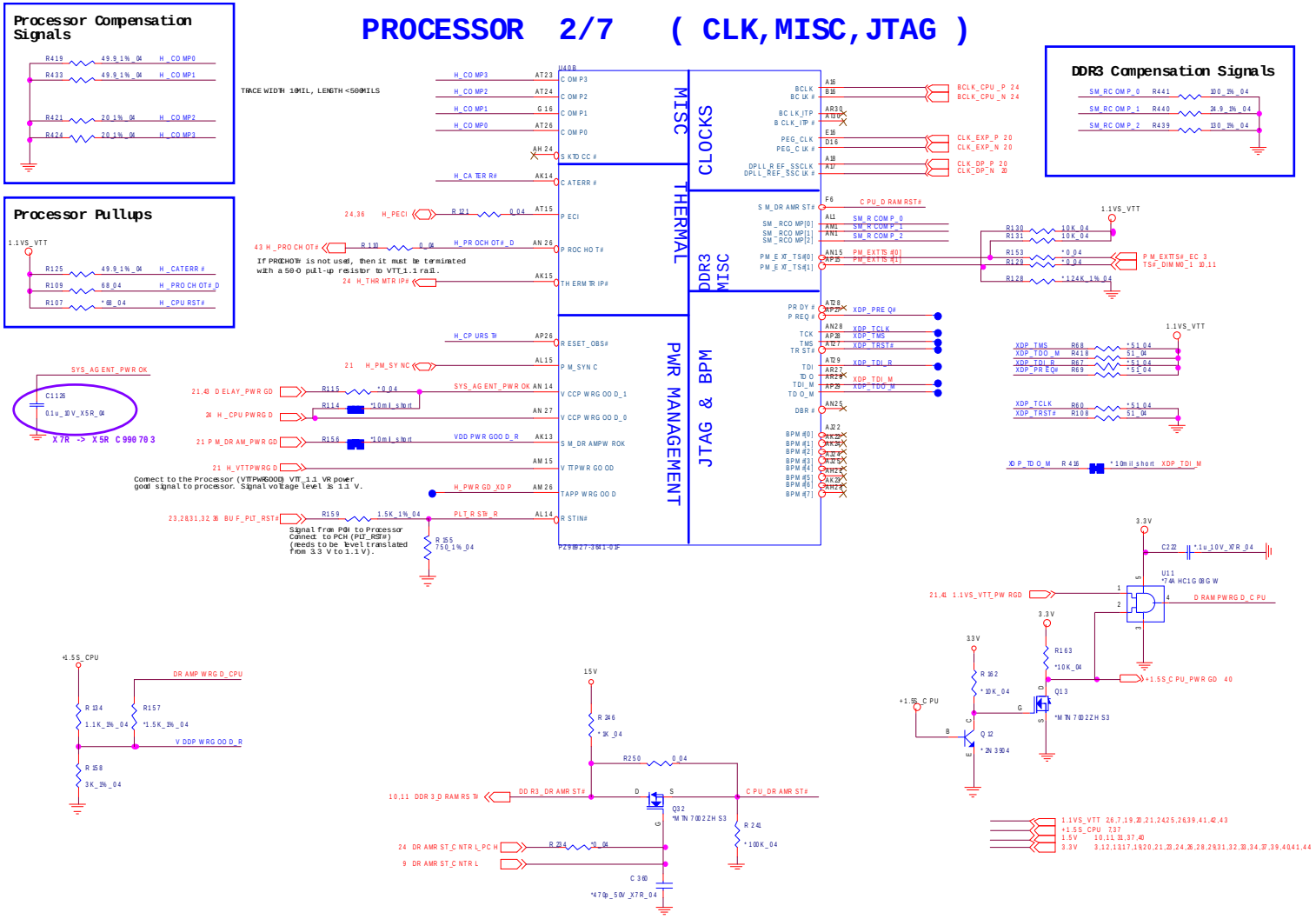

Sheet 4 of 53
CPU 2/7
(CLK, MISC, JTAG)

CPU 3/7 (DDR3)

Sheet 5 of 53
CPU 3/7
(DDR3)

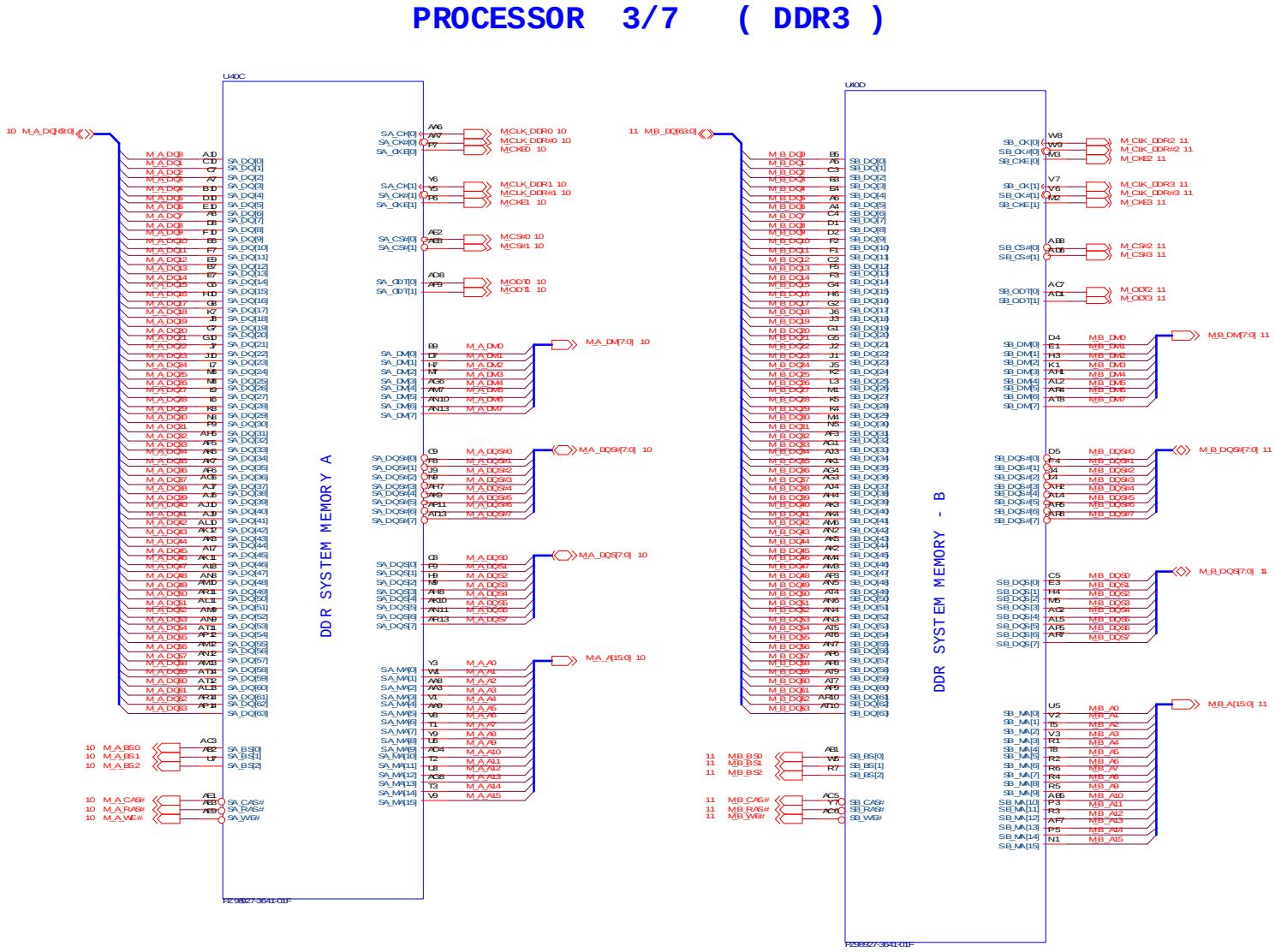

CPU 4/7 (Power)

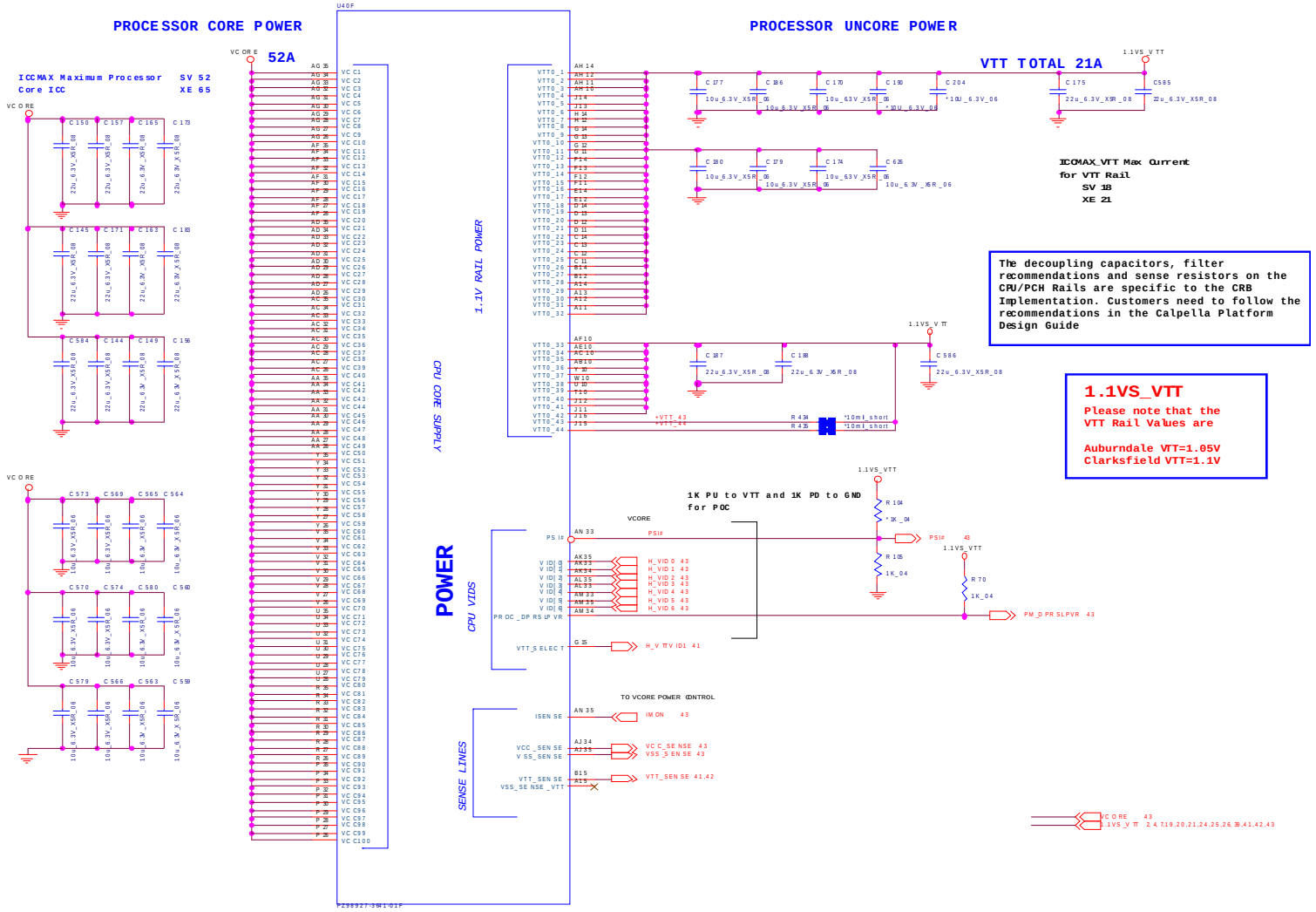

Sheet 6 of 53
CPU 4/7
(Power)

B.Schematic Diagrams

CPU 5/7 (Graphics Power)

PROCESSOR 5/7 (GRAPHICS POWER)

Sheet 7 of 53
CPU 5/7
(Graphics Power)

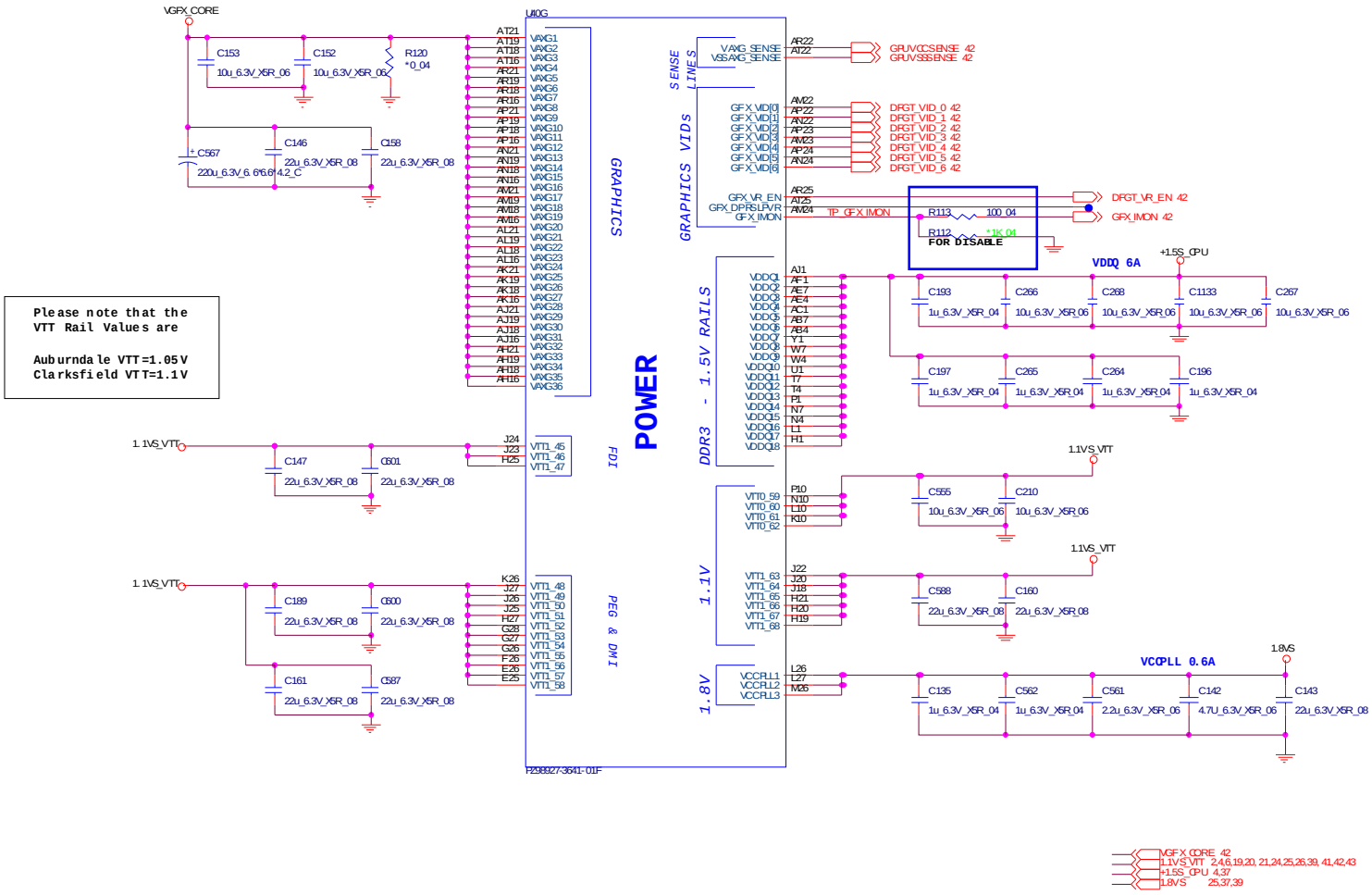

CPU 6/7 (GND)

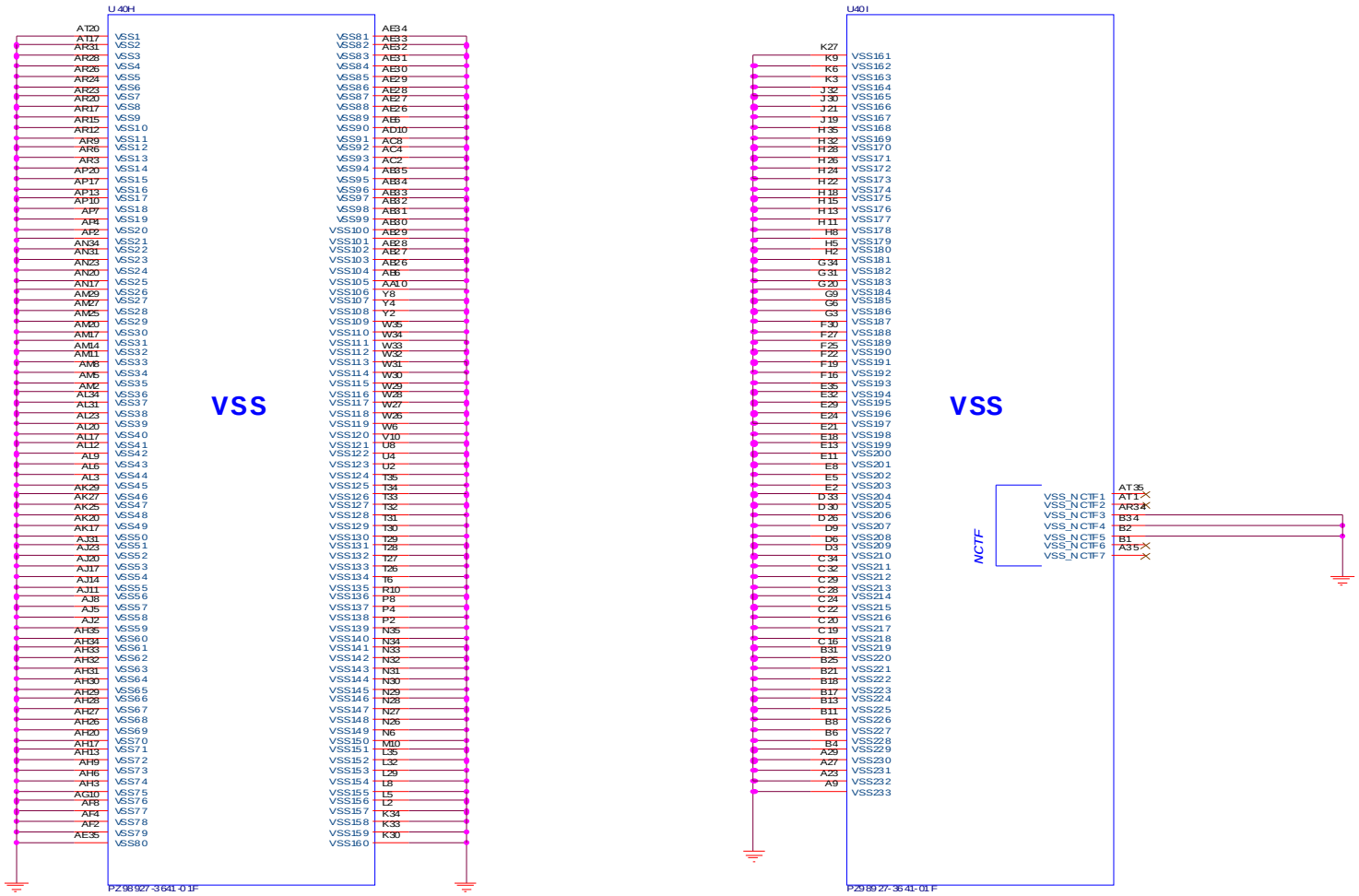

Sheet 8 of 53
CPU 6/7 (GND)

CPU 7/7 (RESERVED)

Sheet 9 of 53
CPU 7/7
(RESERVED)

PROCESSOR 7/7 (RESERVED)

PCI-Express Configuration Select	
CFG0	1 : Single PEG 0 : Bifurcation enable

CFG0 R106 *3.01k_04

CFG3 - PCI-Express Static Lane Reversal	
CFG3	1 : Normal Operation 0 : Lane Numbers Reversed 15 -> 0, 14 -> 1, ...

CFG3 R61 *3.01k_04

CFG4 - Display Port Presence	
CFG4	1 : Disabled; No physical Display Port attached to Embedded Display Port 0 : Enabled; An external Display Port device is connected to the Embedded Display Port

CFG4 R102 *3.01k_04

CFG7 R62 *3.01k_04

CFG7
Clarksfield (only for early samples pre-ES1) - Connect to GND with 3.01K Ohm/5% resistor

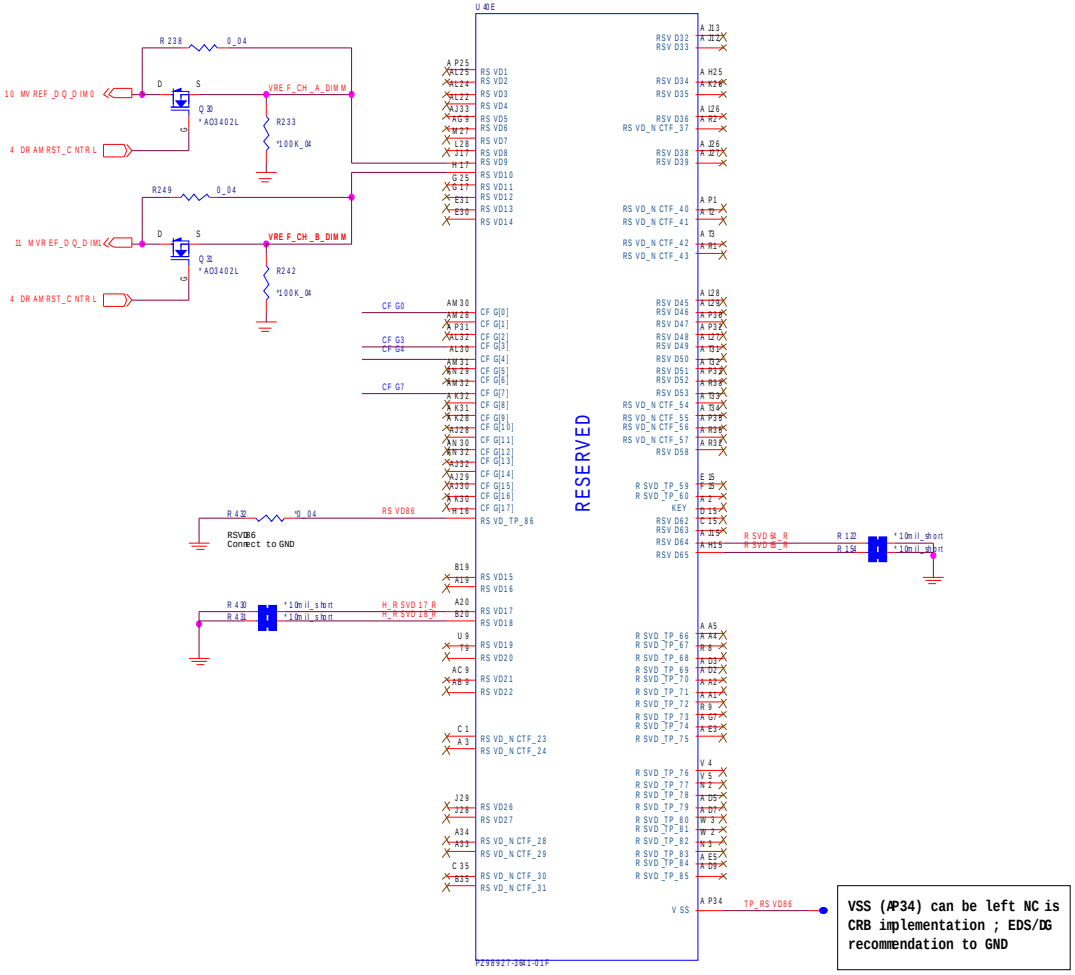

DDR3 SO-DIMM_0

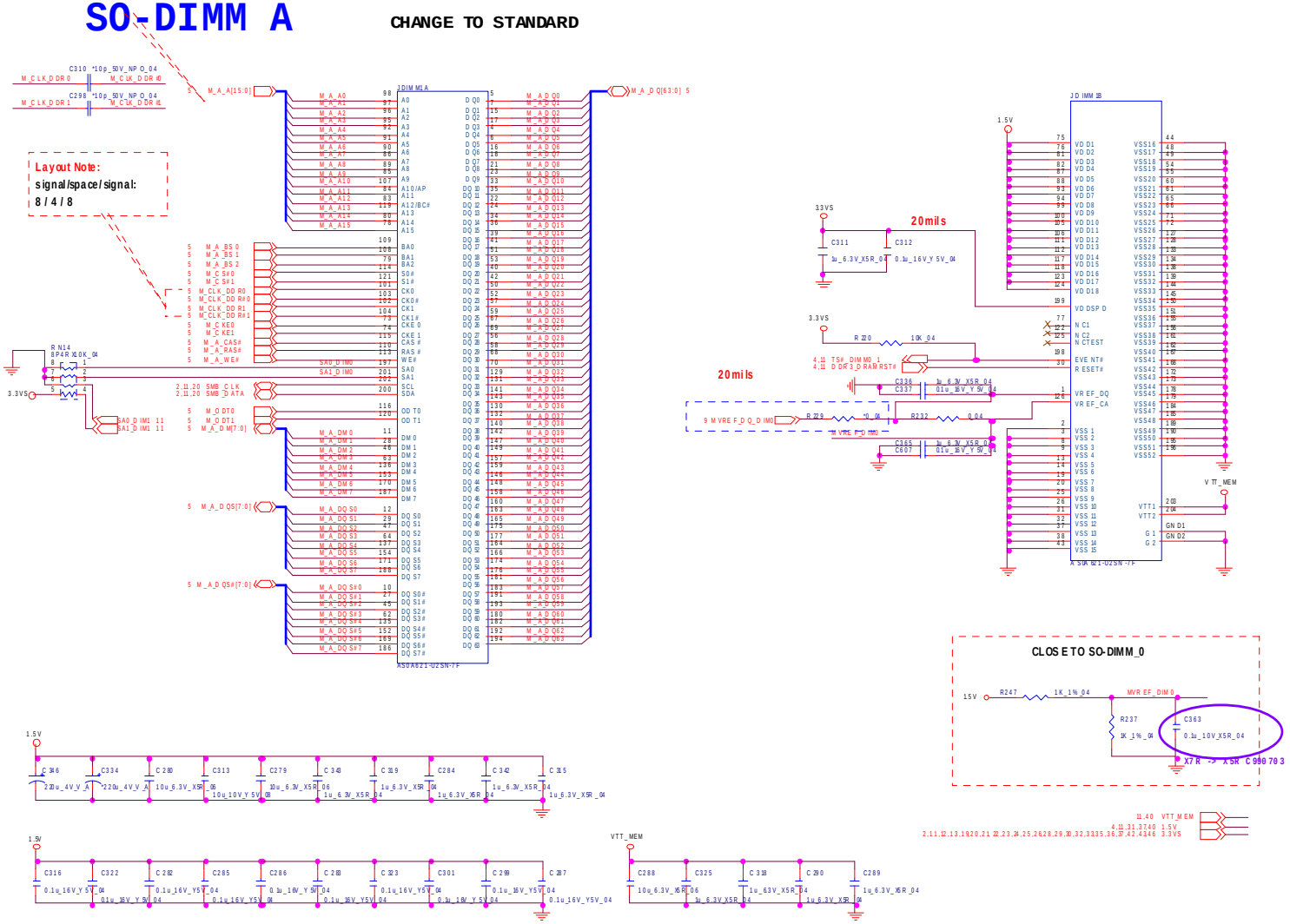

Sheet 10 of 53
DDR3 SO-DIMM_0

DDR3 SO-DIMM_1

SO-DIMM B

CHANGE TO STANDARD

Sheet 11 of 53
DDR3 SO-DIMM_1

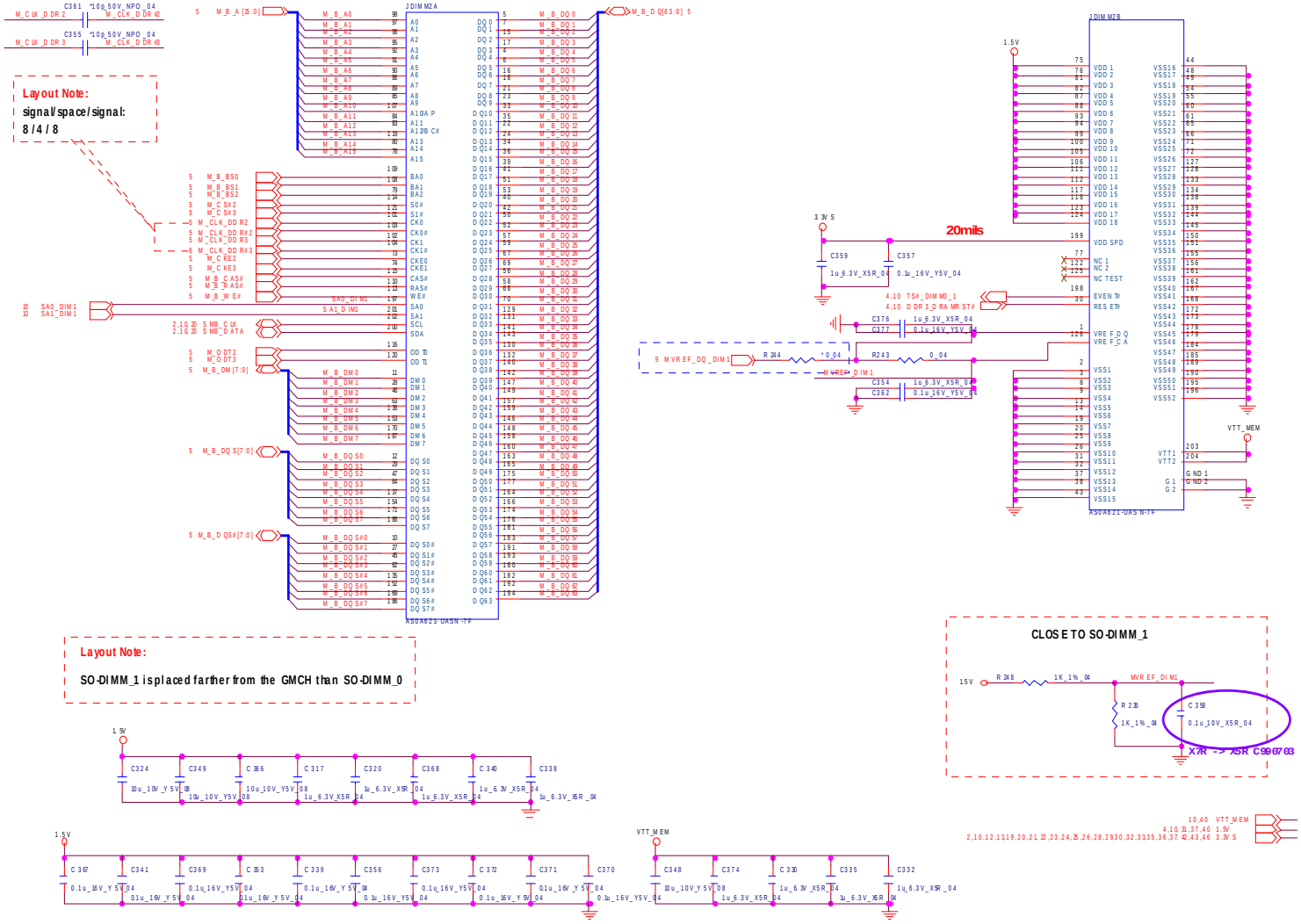

Panel, Inverter, CRT

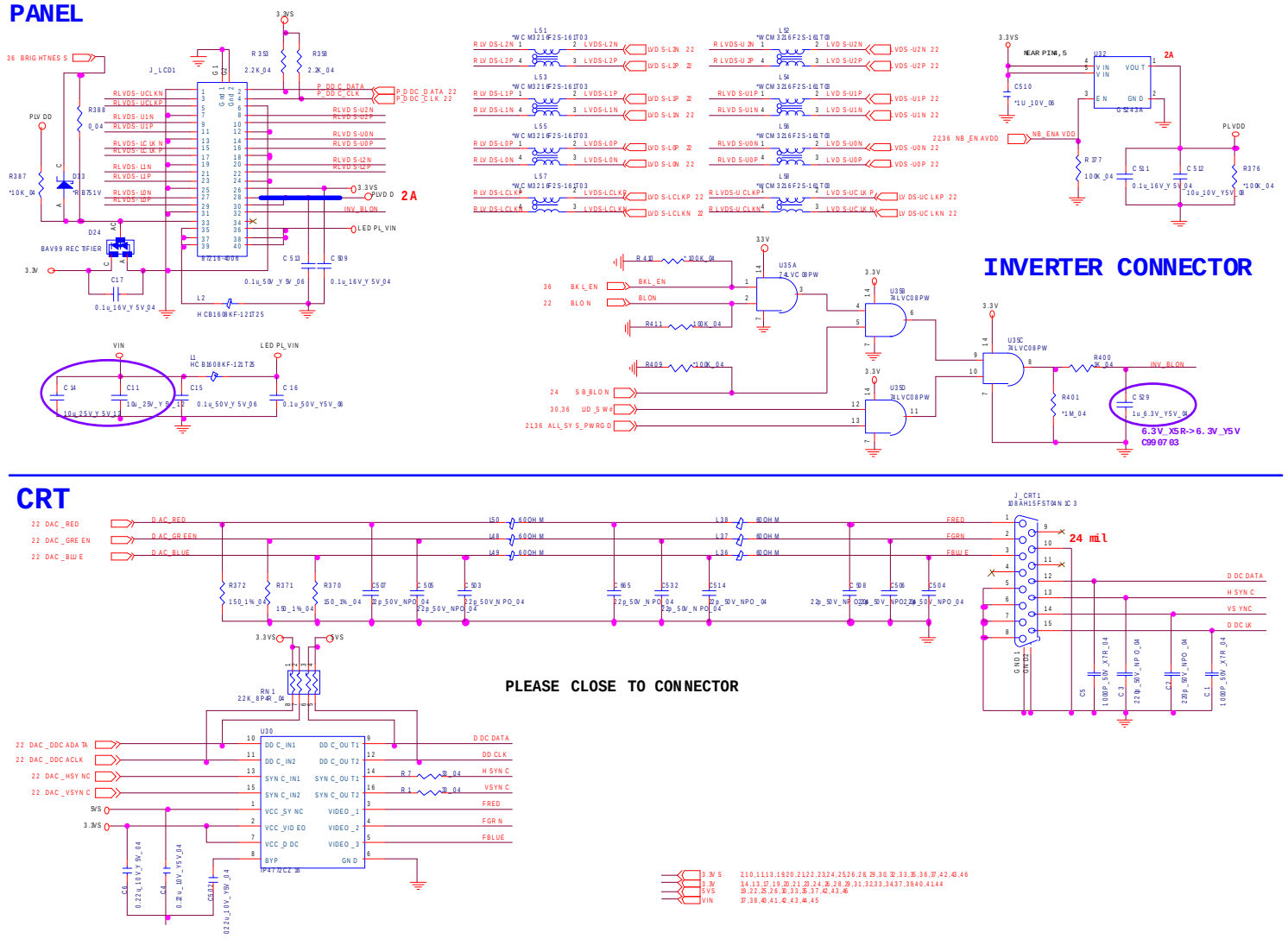

Sheet 12 of 53
Panel, Inverter, CRT

VGA PCI-E Interface

Sheet 13 of 53
VGA PCI-E Interface

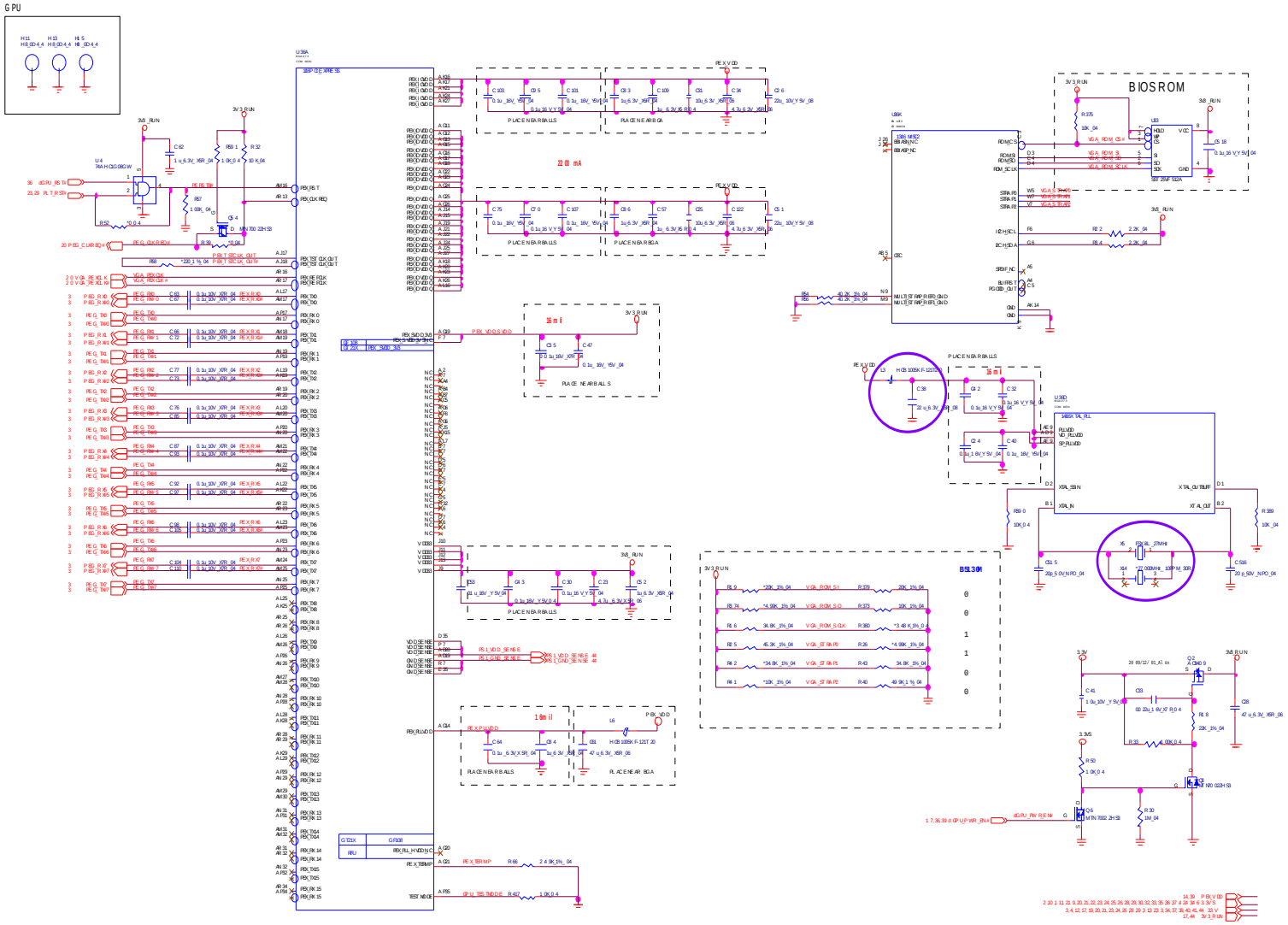

VGA Frame Buffer Interface

Frame Buffer Interface

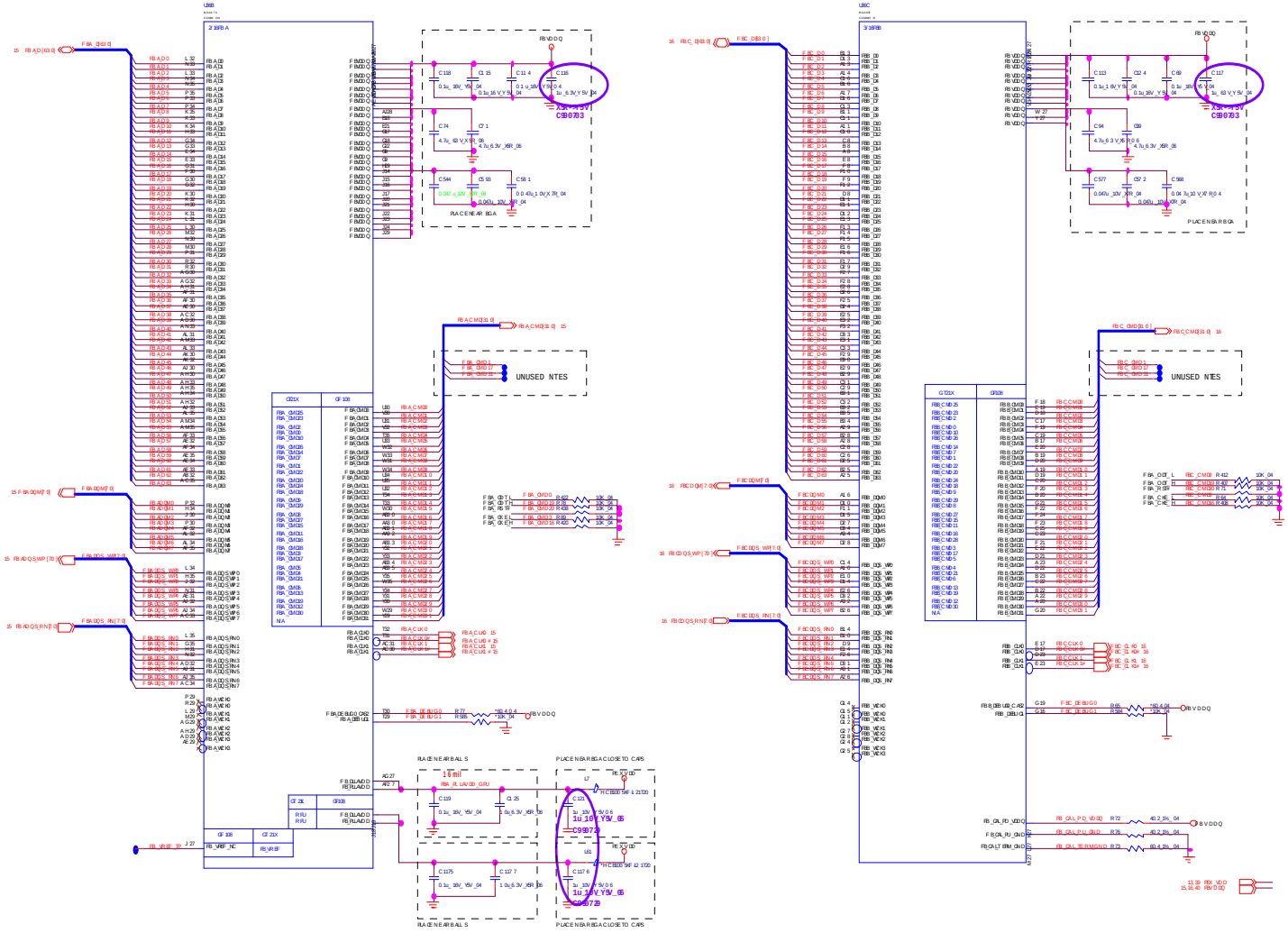

Sheet 14 of 53
VGA Frame Buffer Interface

VGA Frame Buffer A

Frame Buffer Partition A

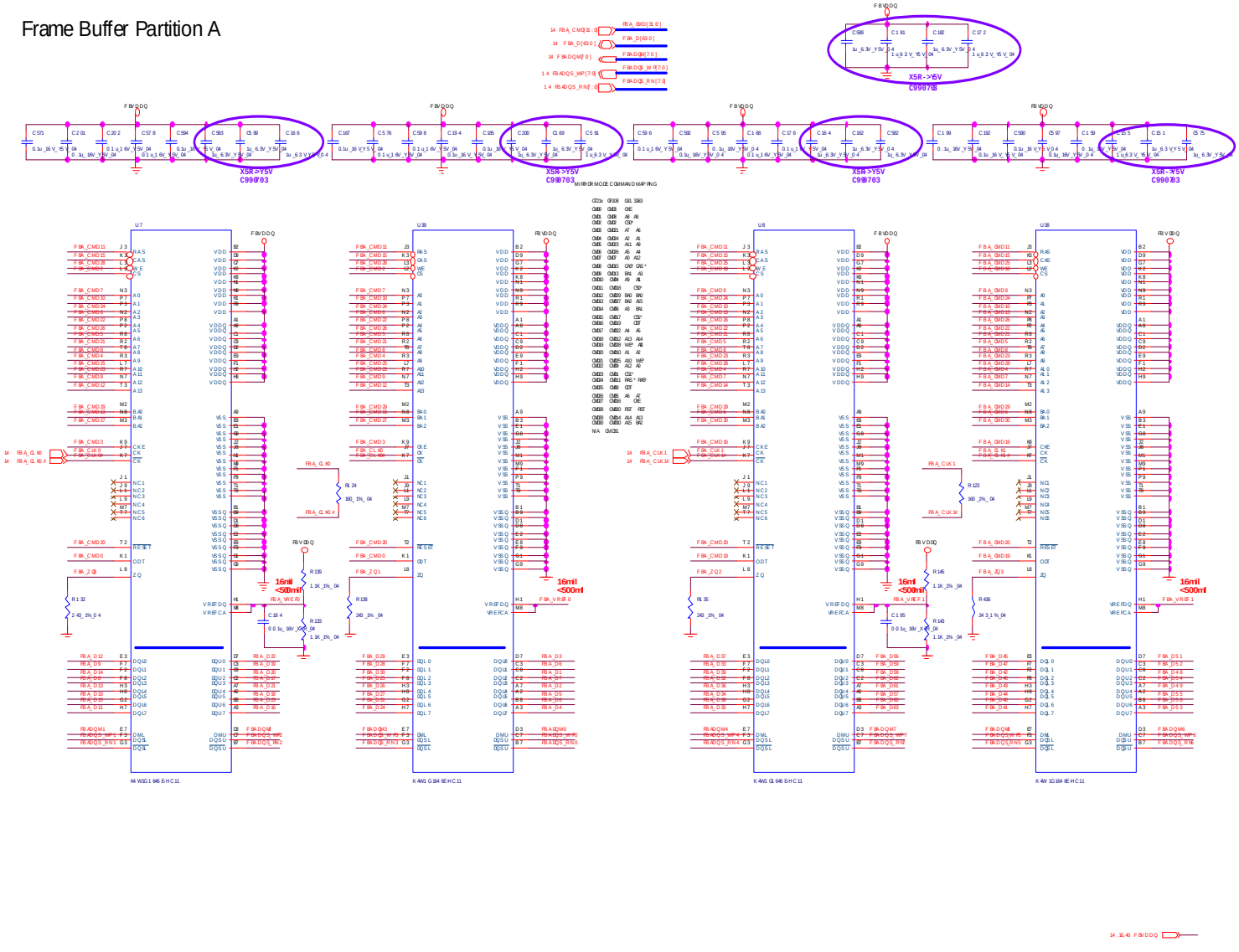

Sheet 15 of 53
VGA Frame Buffer A

VGA Frame Buffer C

Frame Buffer Partition C

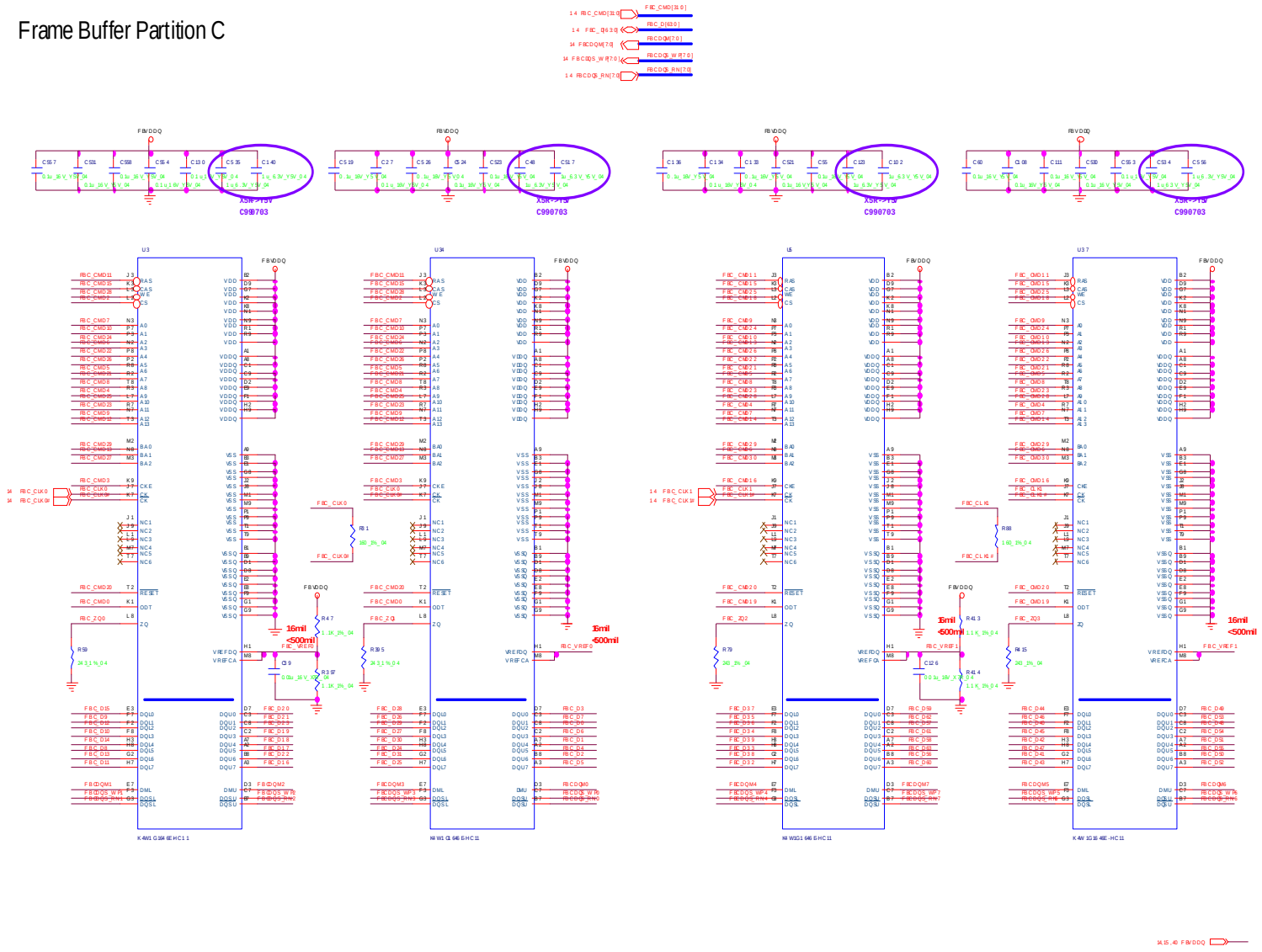

Sheet 16 of 53
VGA Frame Buffer
C

VGA I/O

Sheet 17 of 53
VGA I/O

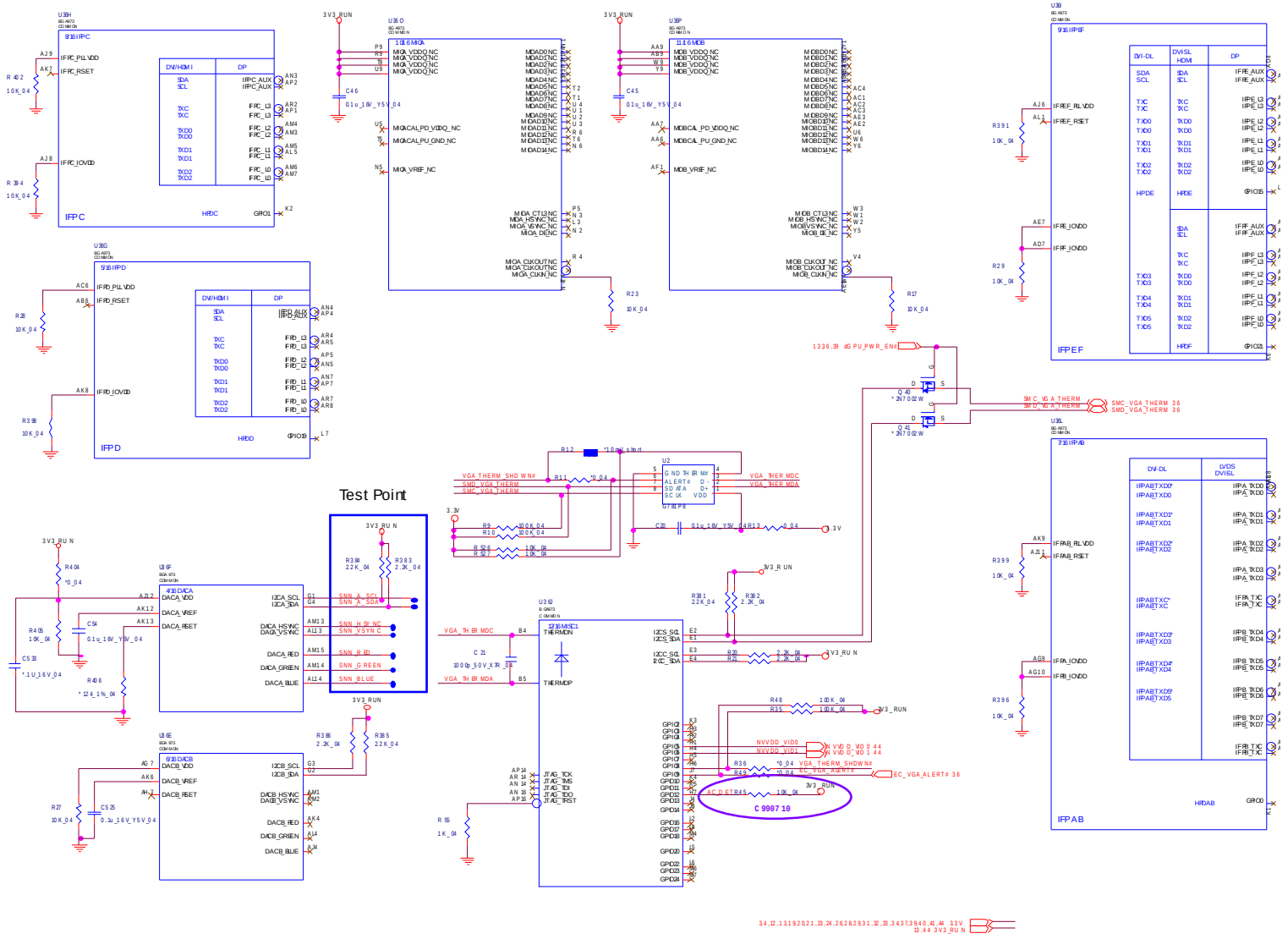

VGA NVVDD Cecoupling

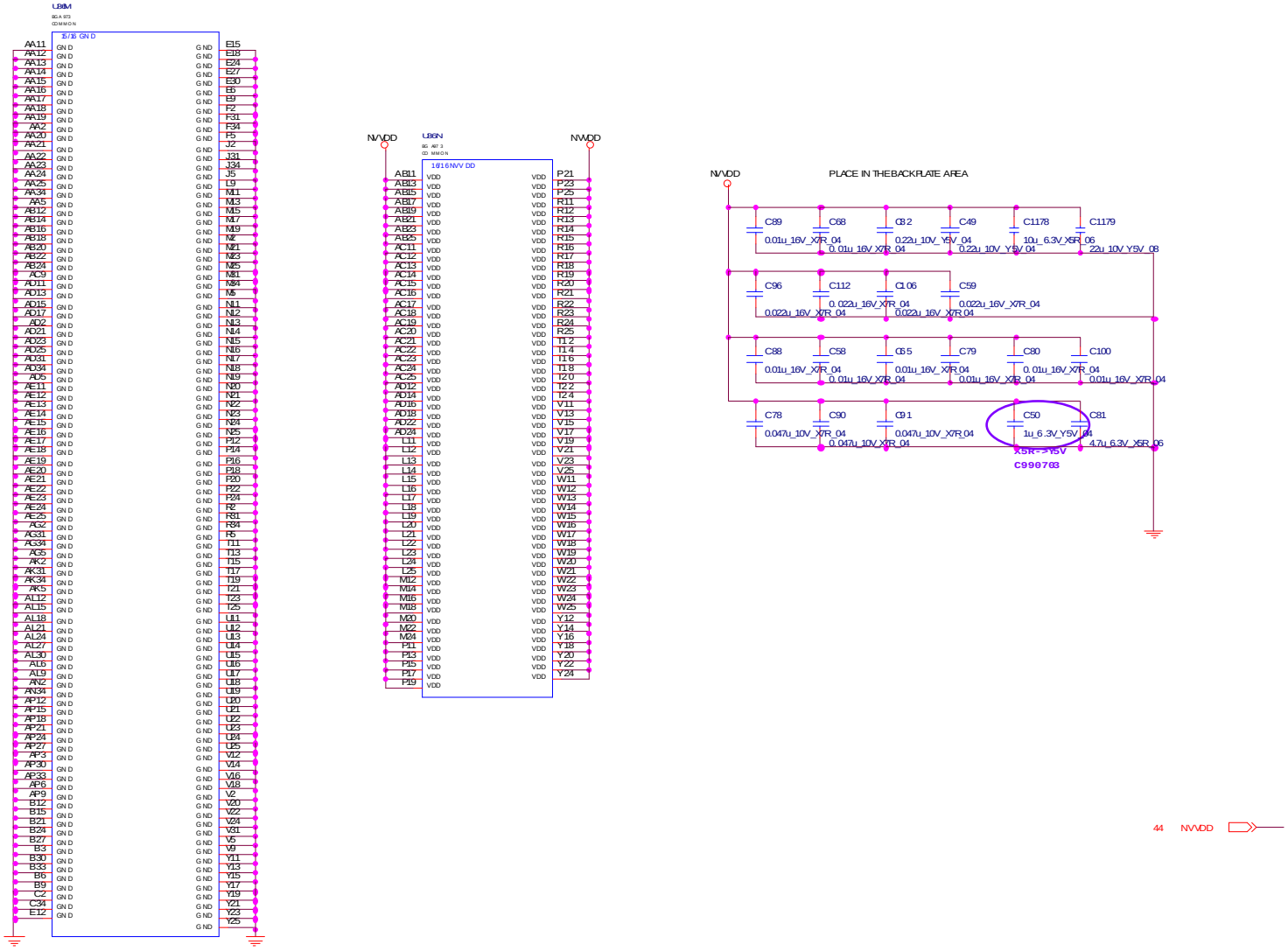

Sheet 18 of 53
VGA NVVDD
Cecoupling

IBEXPEAK- M 1/9

Sheet 19 of 53
IBEXPEAK - M 1/9

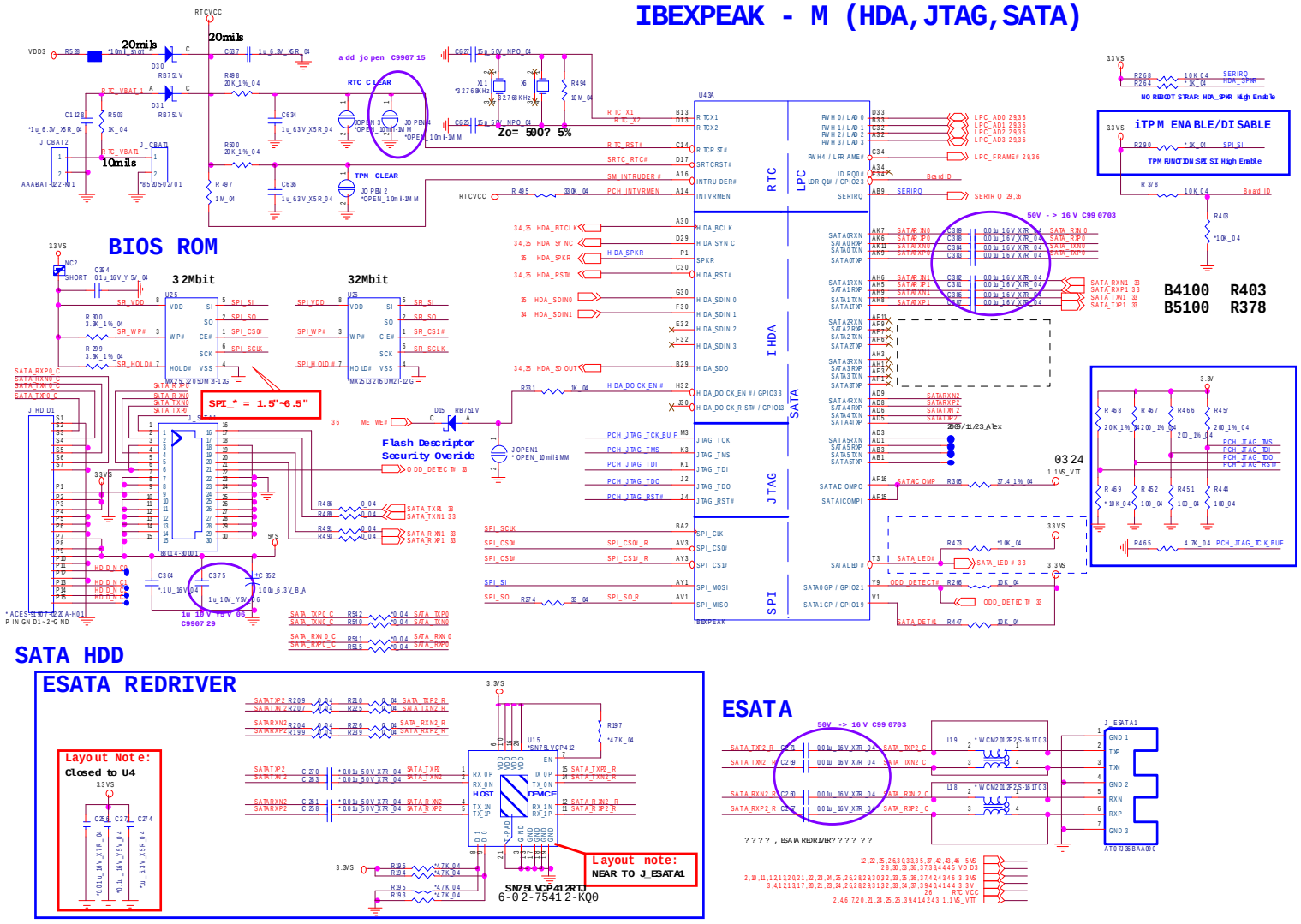

IBEXPEAK - M 2/9

IBEXPEAK - M (PCI-E,SMBUS,CLK)

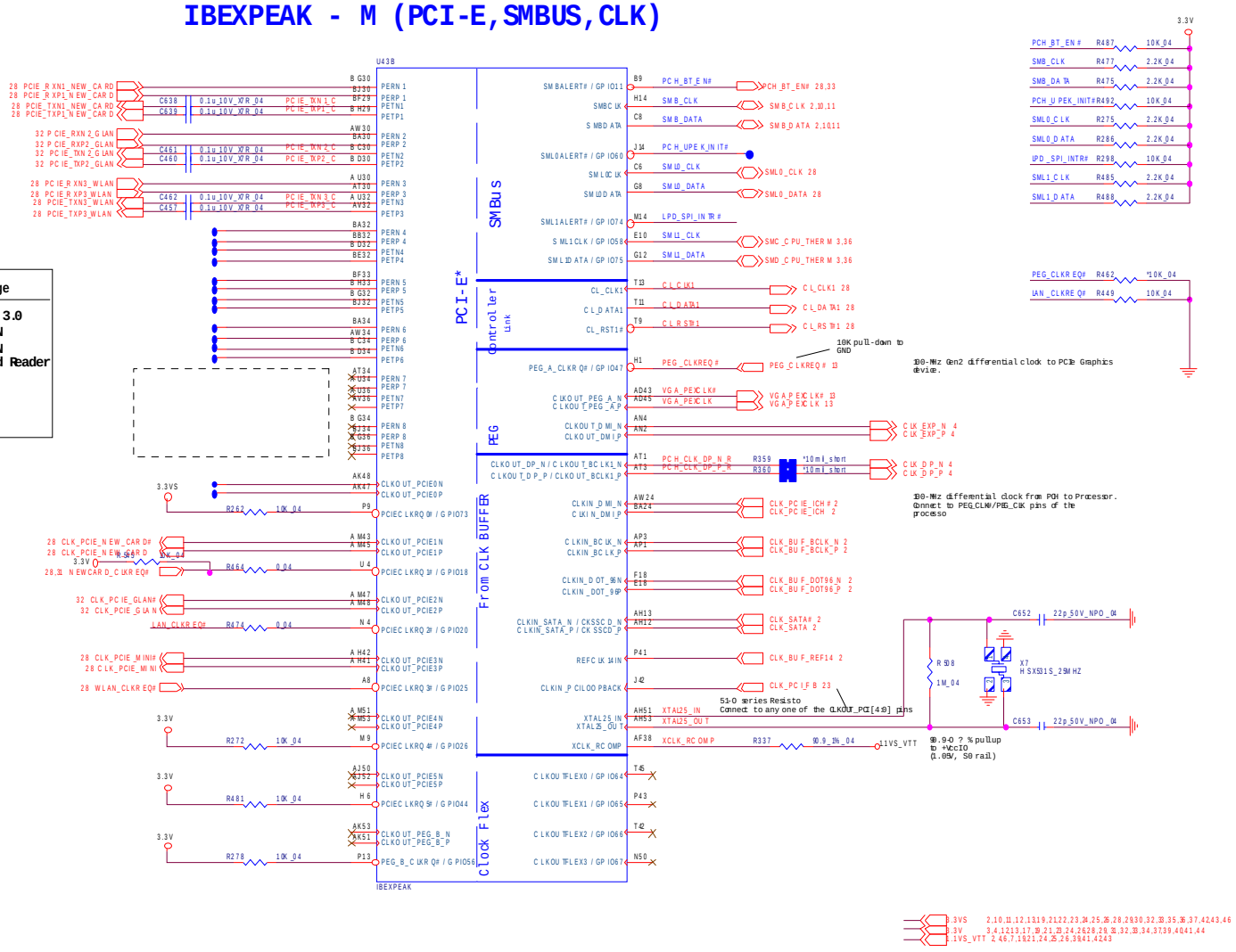

PCI-E x1	Usage
Lane 1	USB 3.0
Lane 2	GLAN
Lane 3	WLAN
Lane 4	Card Reader
Lane 5	X
Lane 6	X
Lane 7	X
Lane 8	X

Sheet 20 of 53
IBEXPEAK - M 2/9

B.Schematic Diagrams

IBEXPEAK - M 3/9

IBEXPEAK - M (DMI,FDI,GPIO)

Sheet 21 of 53
IBEXPEAK - M 3/9

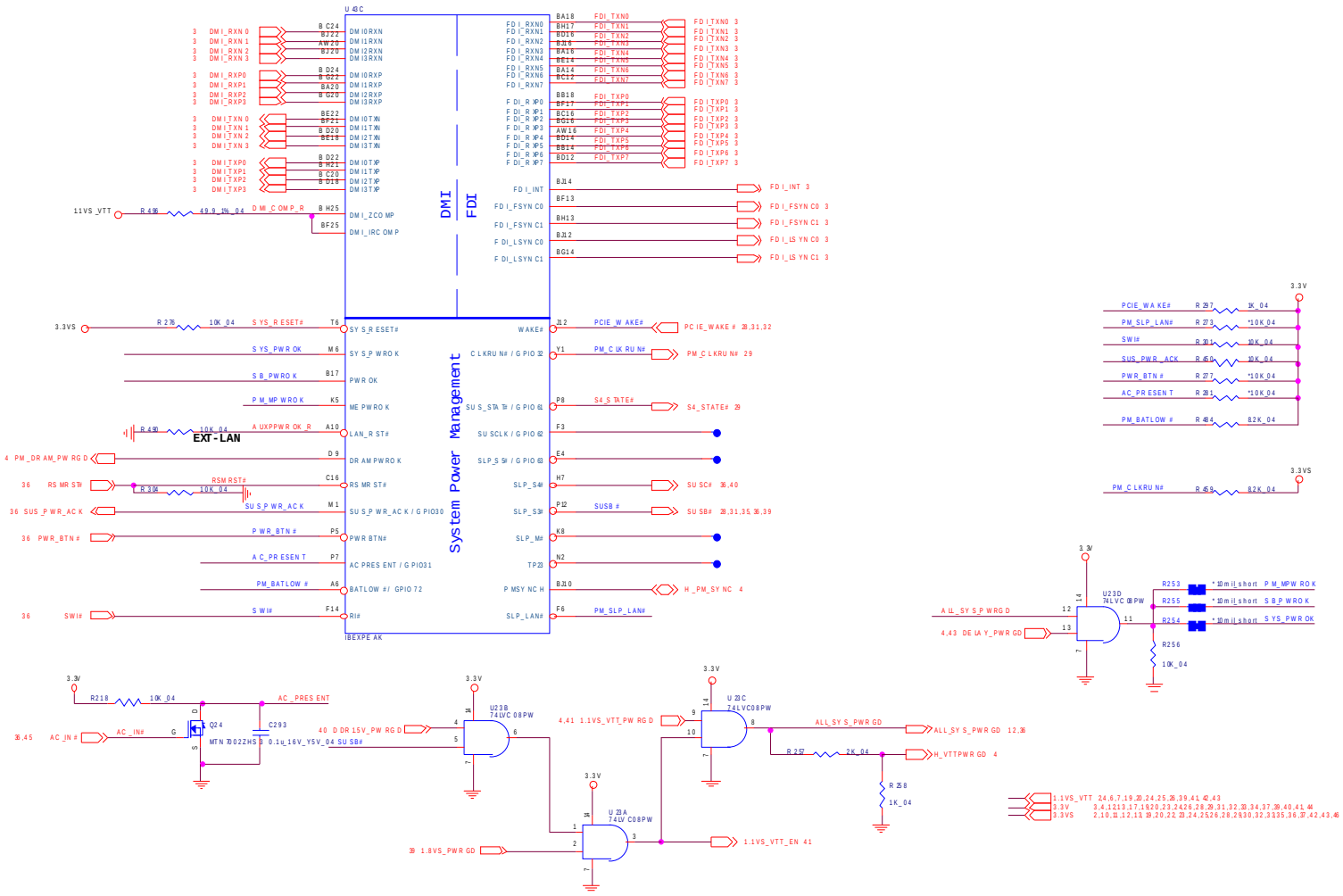

IBEXPEAK - M 4/9

IBEXPEAK - M (LVDS,DDI)

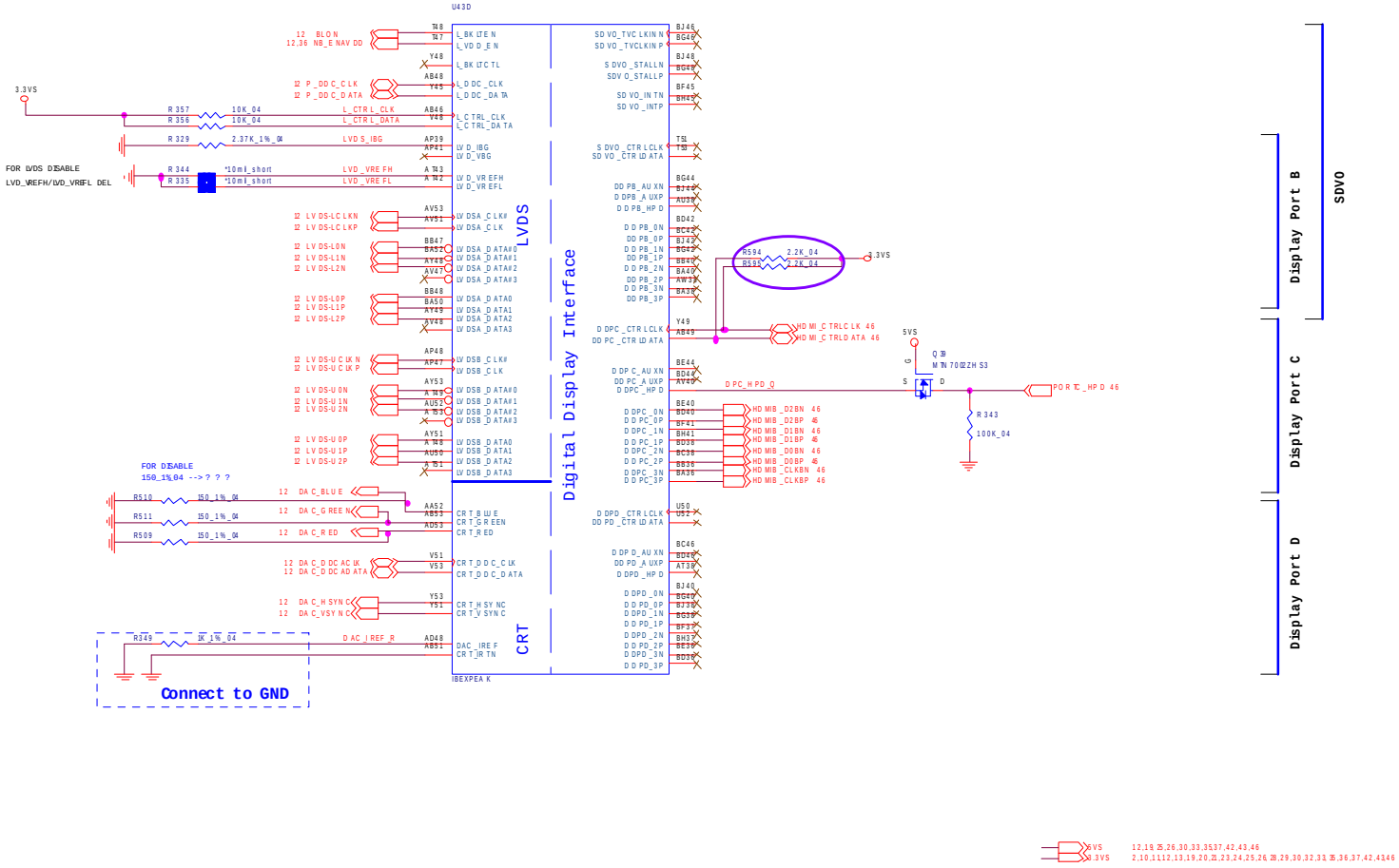

Sheet 22 of 53
IBEXPEAK - M 4/9

IBEXPEAK - M 5/9

Sheet 23 of 53
IBEXPEAK - M 5/9

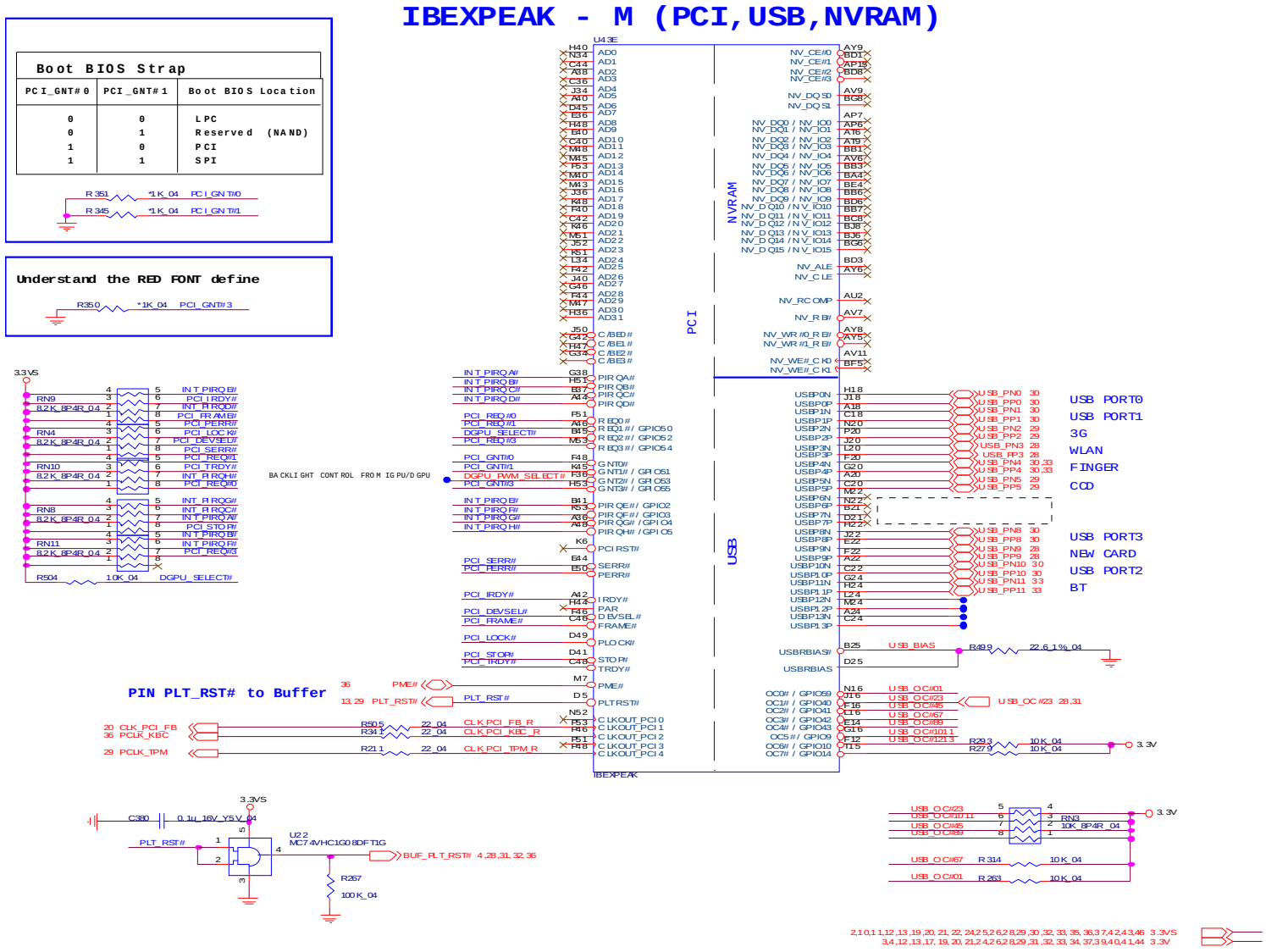

IBEXPEAK - M 6/9

IBEXPEAK - M (GPIO,VSS_NCTF,RSVD)

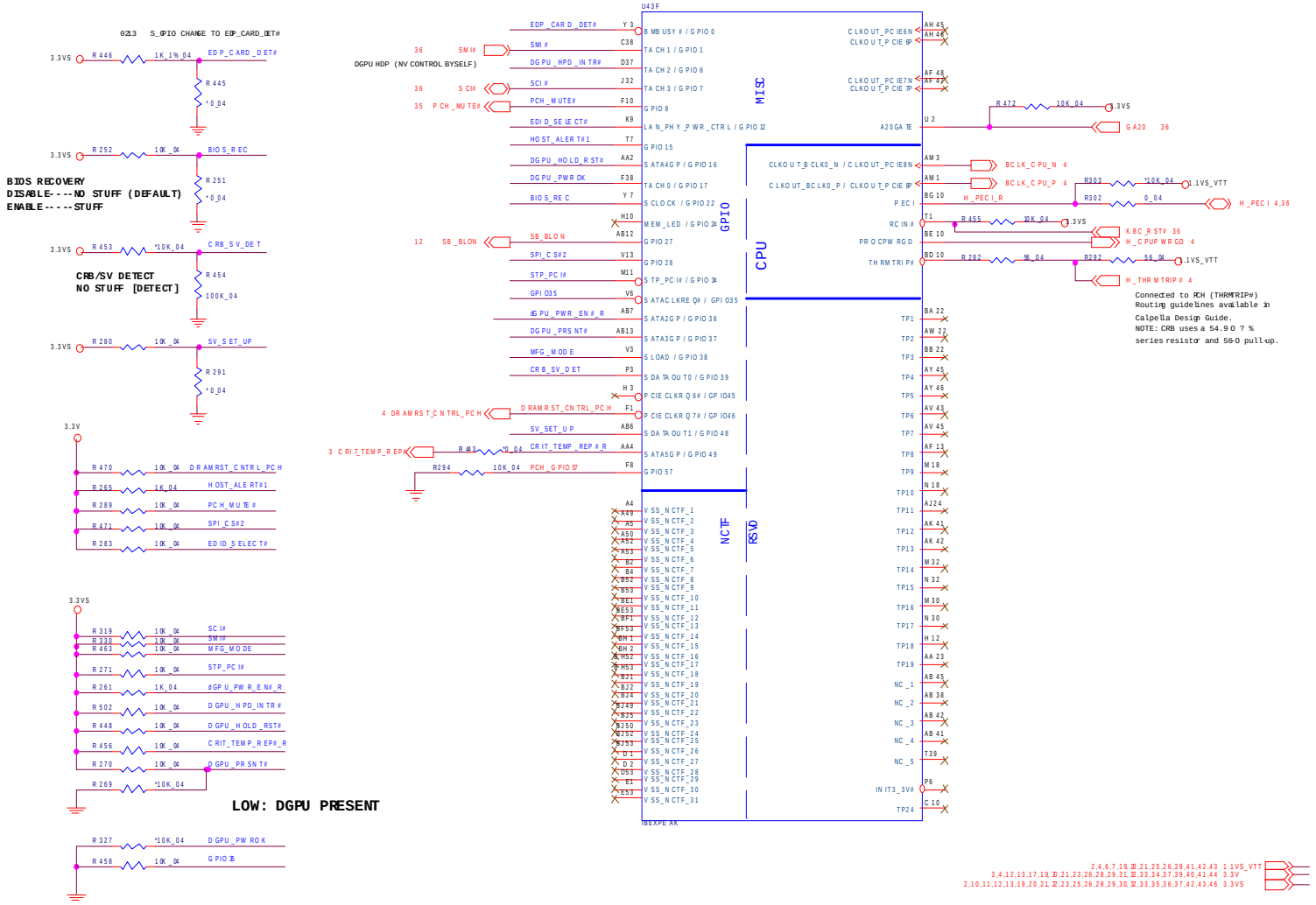

Sheet 24 of 53
IBEXPEAK - M 6/9

B.Schematic Diagrams

IBEXPEAK - M 7/9

Sheet 25 of 53
IBEXPEAK - M 7/9

IBEXPEAK - M (POWER)

APL5603-33B 6-02-56033-4C0
G9091-330T11UF 6-02-90913-4C0

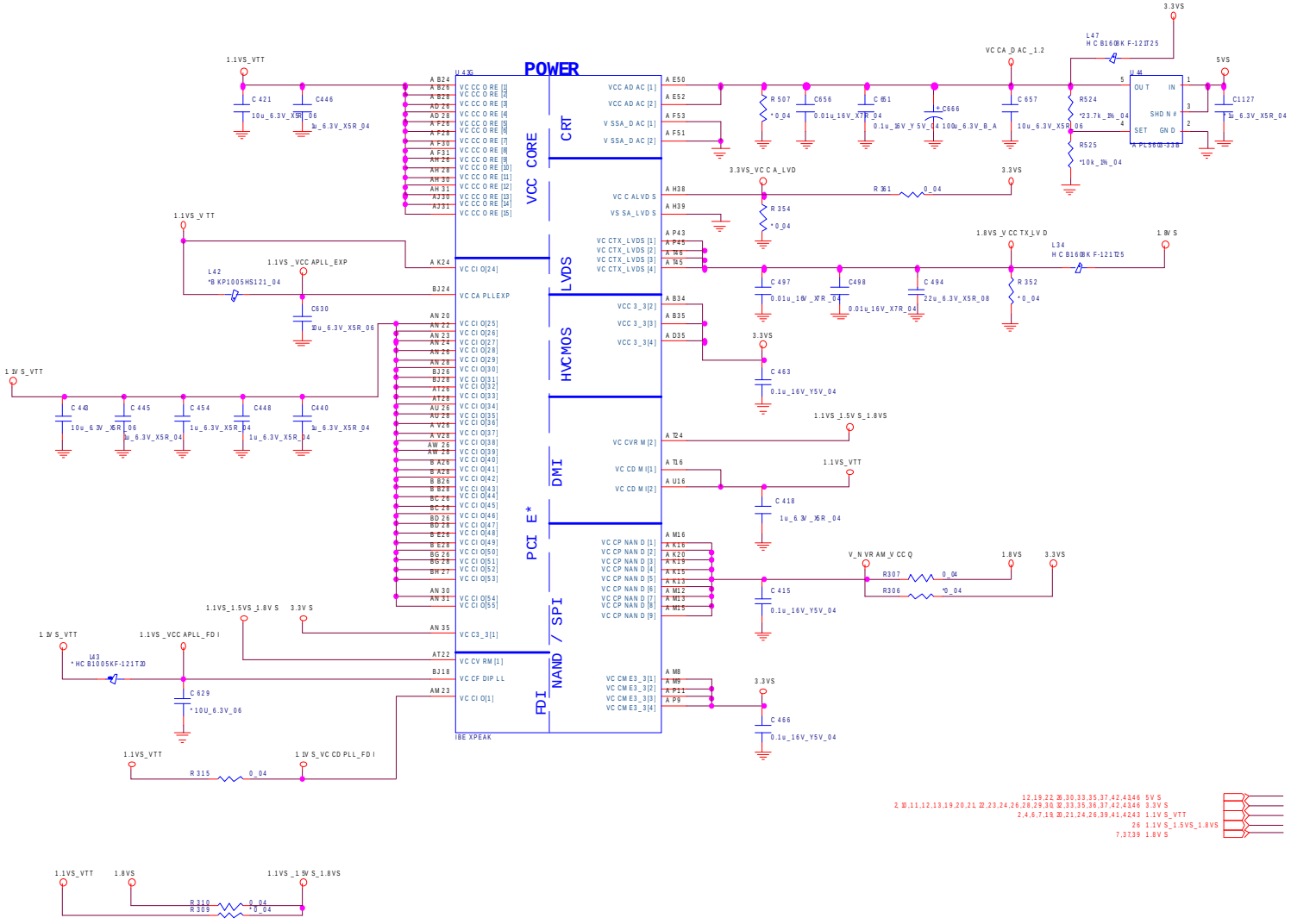

IBEXPEAK - M 8/9

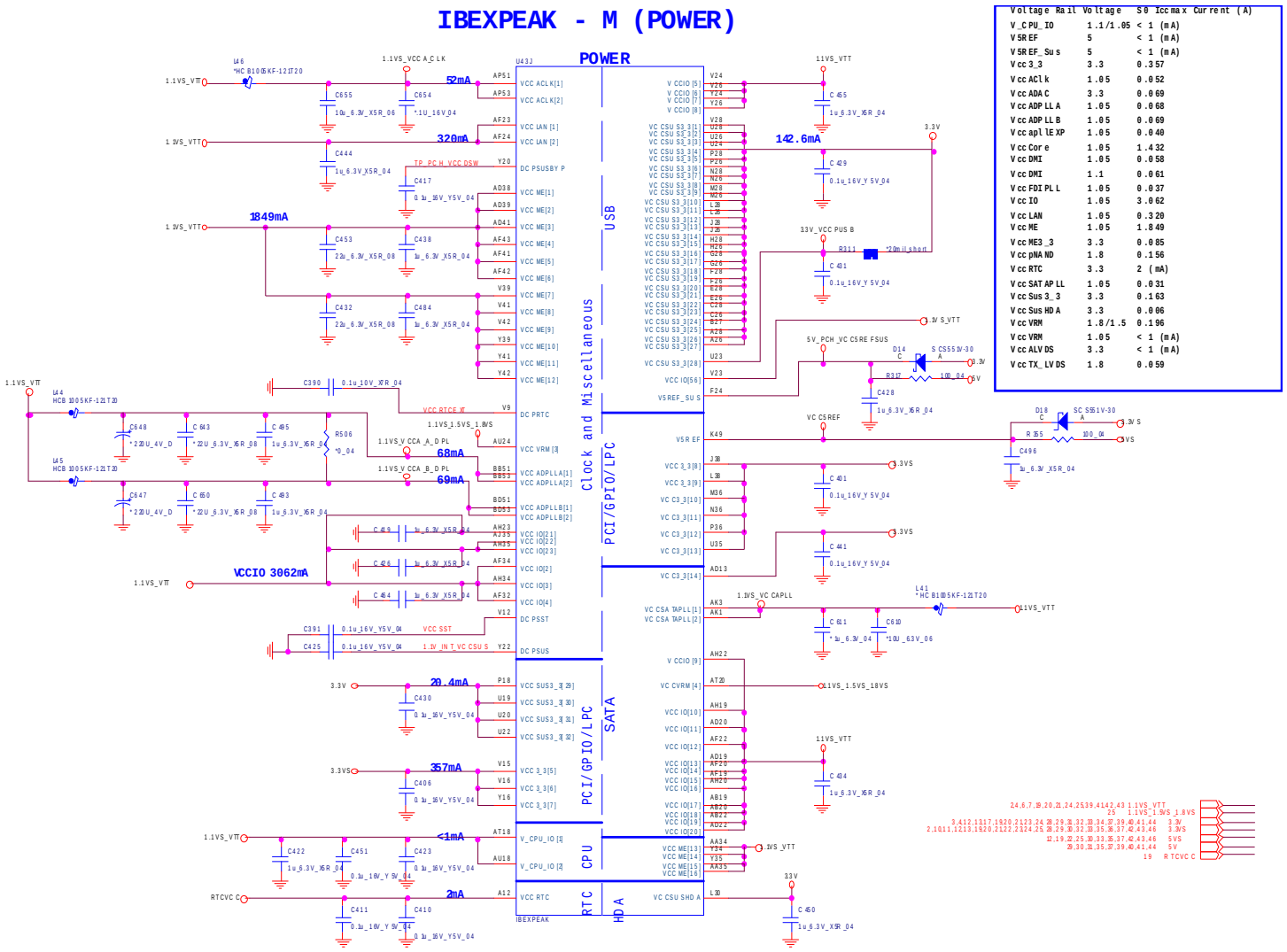

Voltage Rail	Voltage	S0 Iccmax Current (A)
V_CPU_IO	1.1/1.05	< 1 (mA)
V5REF	5	< 1 (mA)
V5REF_Sus	5	< 1 (mA)
Vcc3_3	3.3	0.357
VccAClk	1.05	0.052
VccADAC	3.3	0.069
VccADPLLA	1.05	0.068
VccADPLLB	1.05	0.069
VccapllEXP	1.05	0.040
VccCore	1.05	1.432
VccDMI	1.05	0.058
VccDMI	1.1	0.061
VccFDIPLL	1.05	0.037
VccIO	1.05	3.062
VccLAN	1.05	0.320
VccME	1.05	1.849
VccME3_3	3.3	0.085
VccpNAND	1.8	0.156
VccRTC	3.3	2 (mA)
VccSATAPLL	1.05	0.031
VccSus3_3	3.3	0.163
VccSusHDA	3.3	0.006
VccVRM	1.8/1.5	0.196
VccVRM	1.05	< 1 (mA)
VccALVDS	3.3	< 1 (mA)
VccTX_LVDS	1.8	0.059

Sheet 26 of 53
IBEXPEAK - M 8/9

IBEXPEAK - M 9/9

Sheet 27 of 53
IBEXPEAK - M 9/9

IBEXPEAK - M (GND)

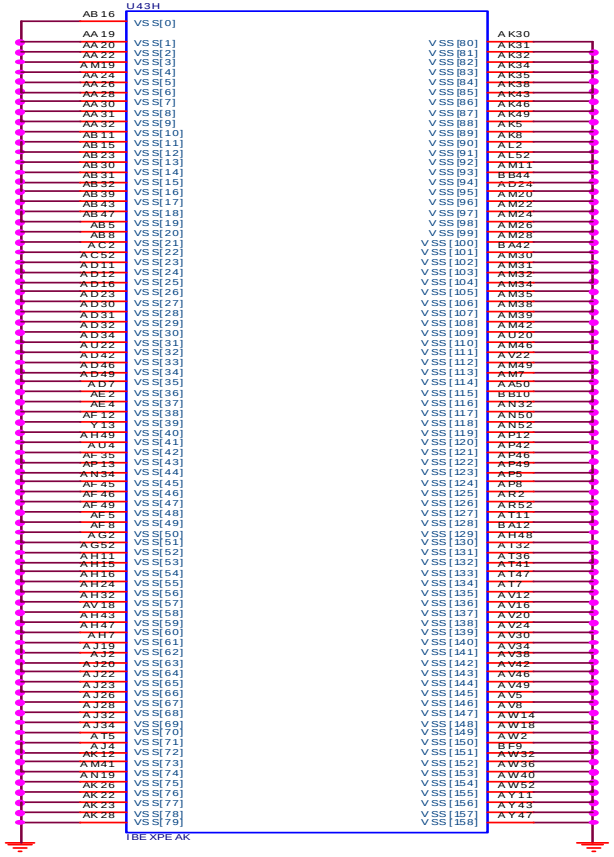

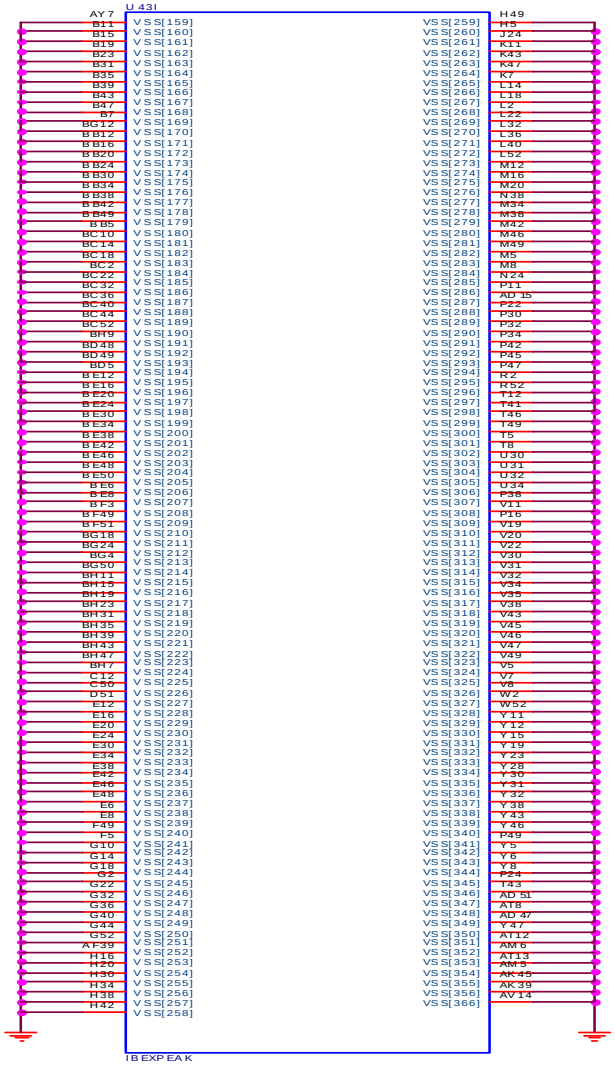

New Card, Mini PCIE

NEW CARD

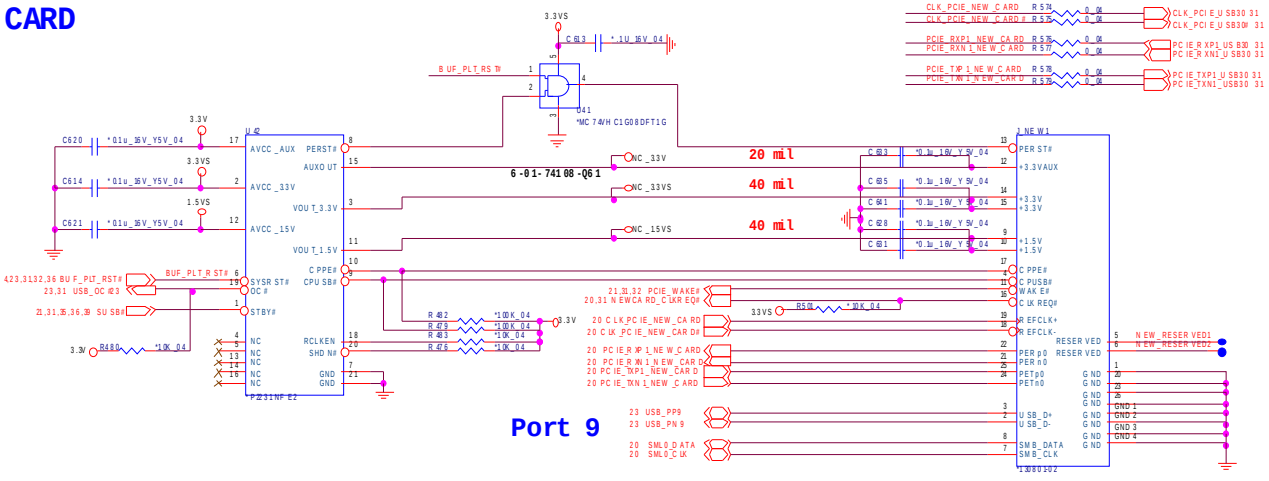

MINI CARD

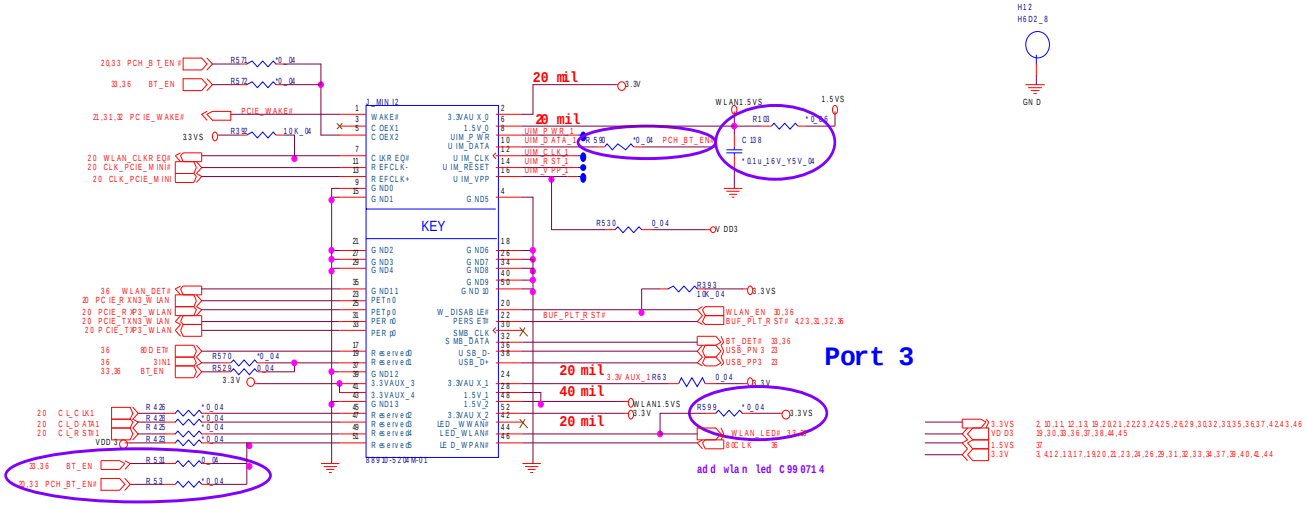

Sheet 28 of 53
New Card, Mini PCIE

3G, CCD, TPM

Sheet 29 of 53
3G, CCD, TPM

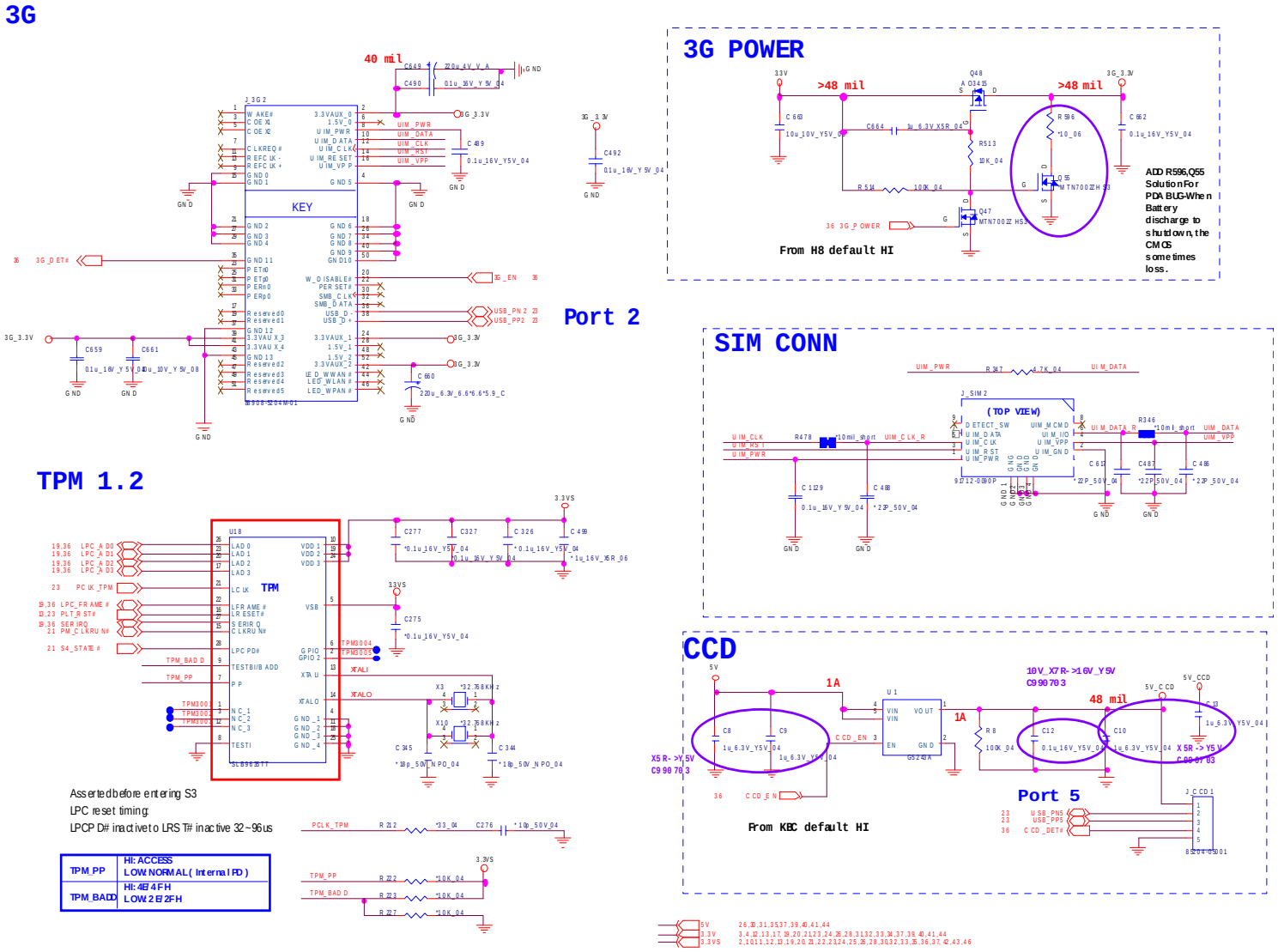

USB, Fan, TP, FP, Multi-Conn

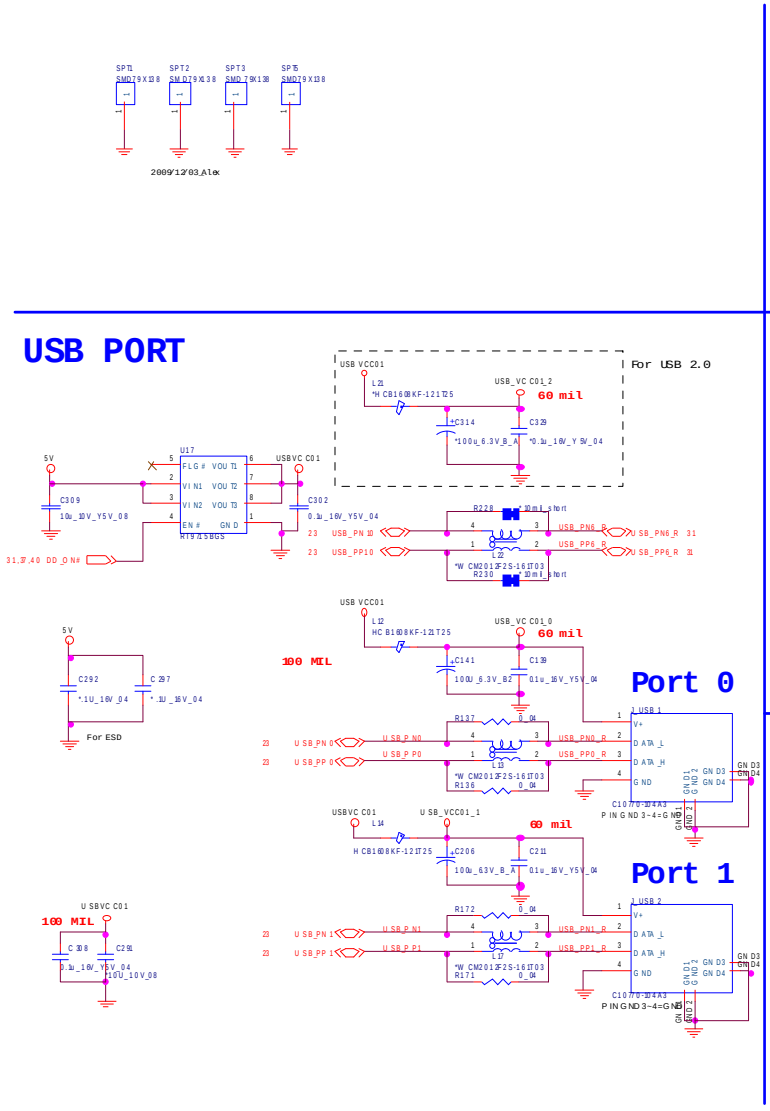

Sheet 30 of 53
USB, Fan, TP, FP, Multi-Conn

USB 3.0

Sheet 31 of 53
USB 3.0

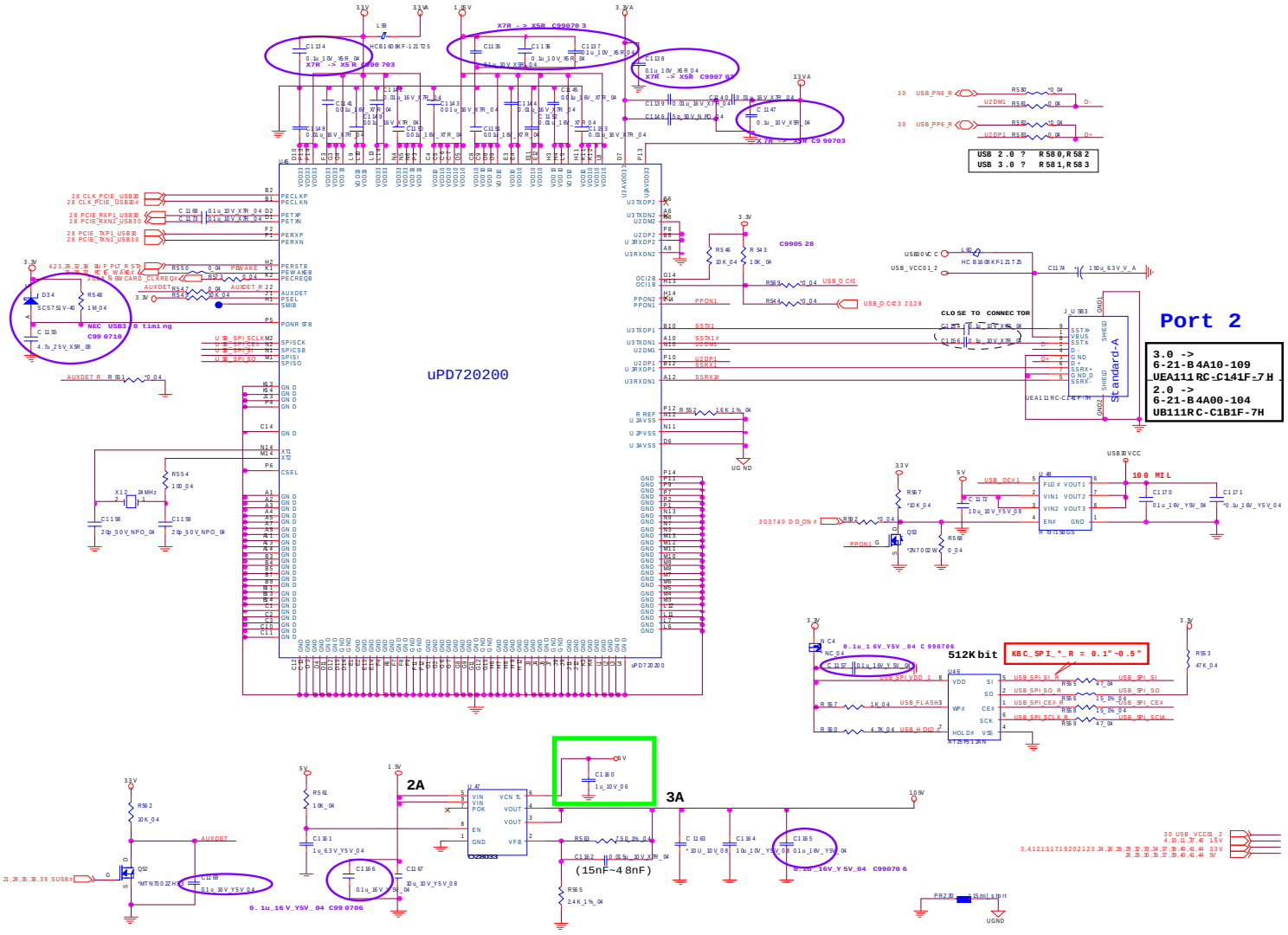

JMC 251 Card Reader

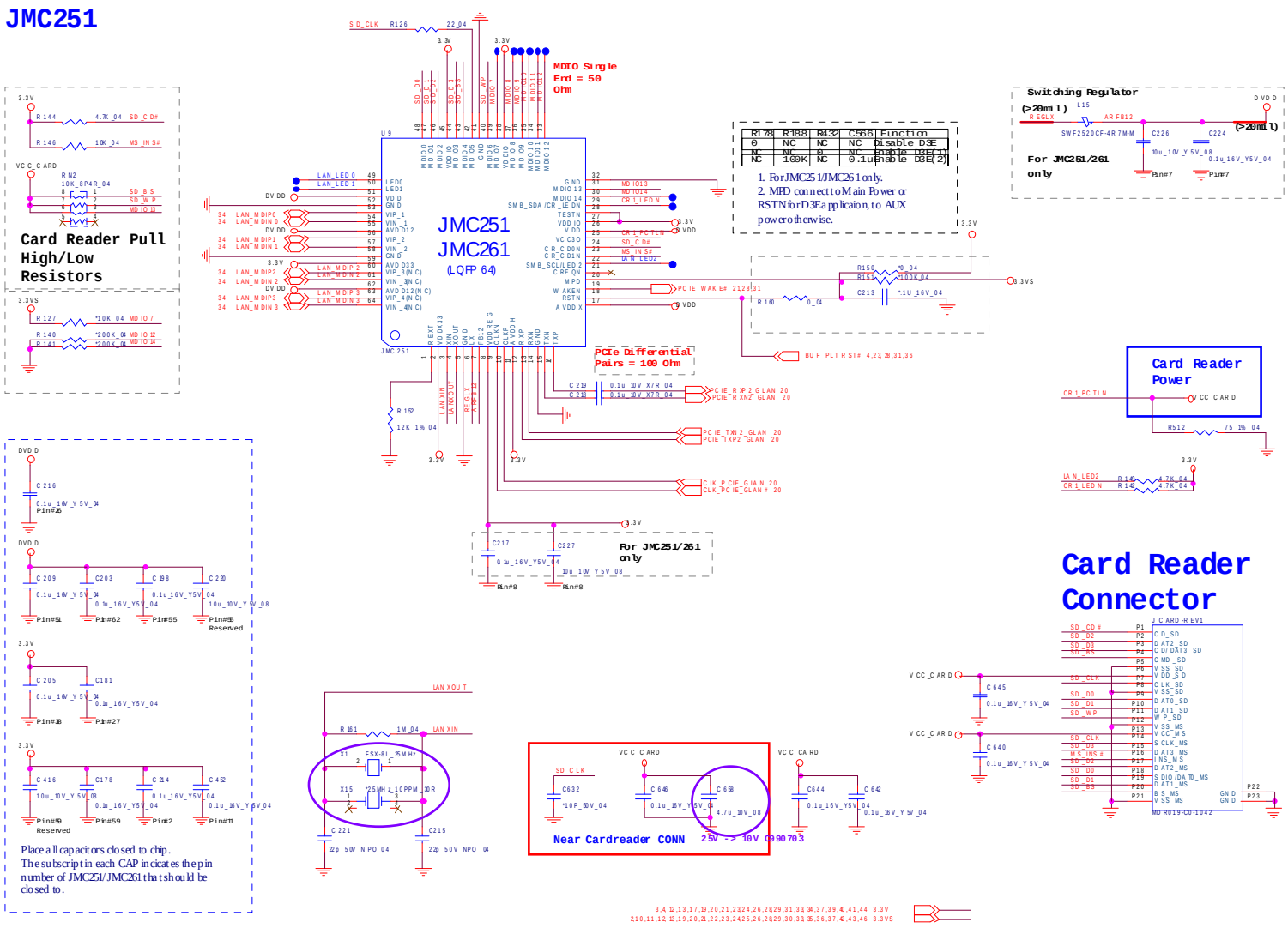

R178	R188	R432	C566	Function
0	NC	NC	NC	Disable D3E
NC	NC	0	NC	Enable D3E(1)
NC	100K	NC	0.1u	enable D3E(2)

1. For JMC251/JMC261 only.
2. MPD connect to Main Power or RSTN for D3E applicaion, to AUX power otherwise.

Sheet 32 of 53
JMC 251 Card Reader

B.Schematic Diagrams

SATA ODD, LED, Hotkey, LID SW

Sheet 33 of 53
SATA ODD, LED, Hotkey, LID SW

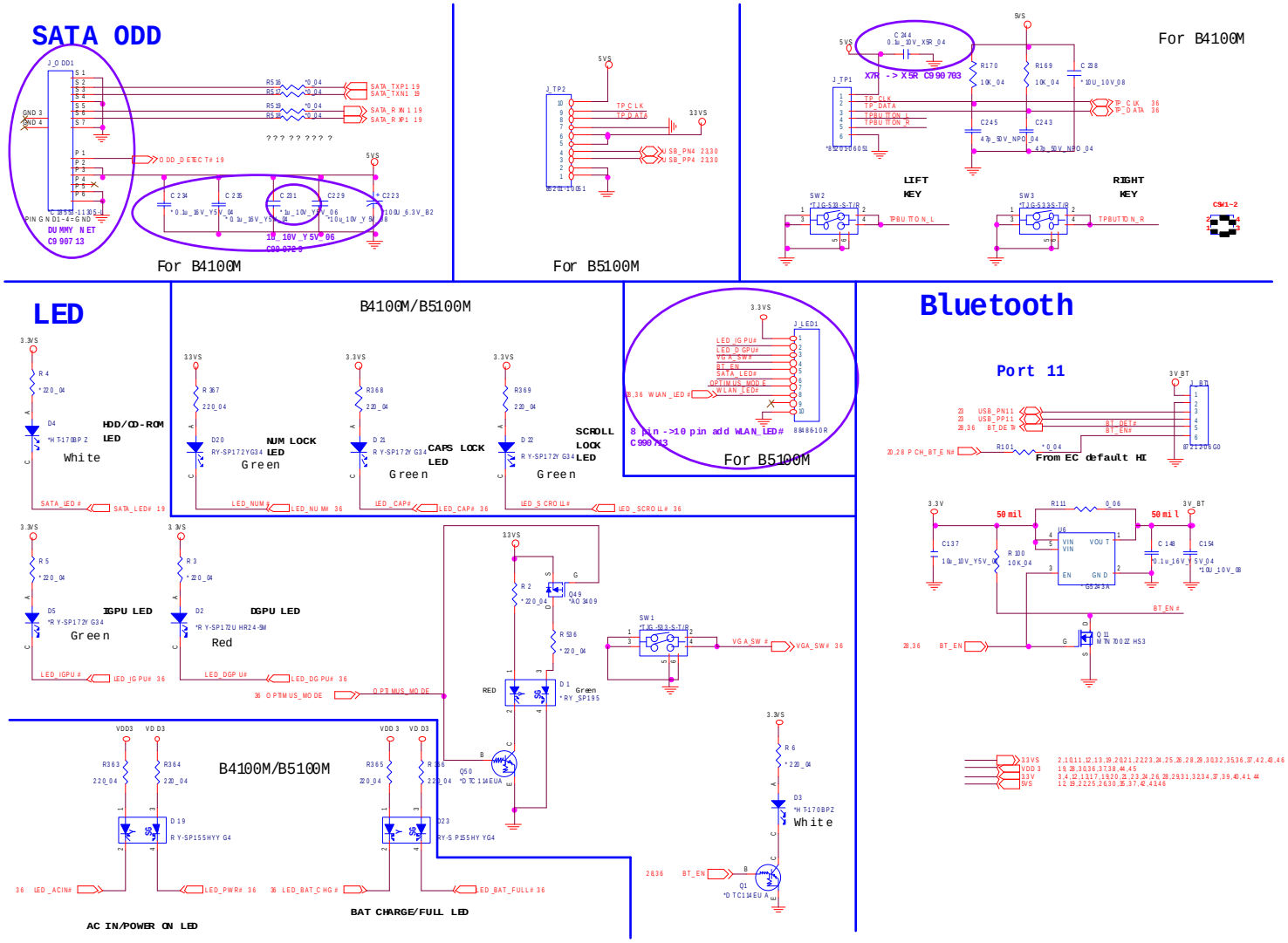

RJ45, Modem

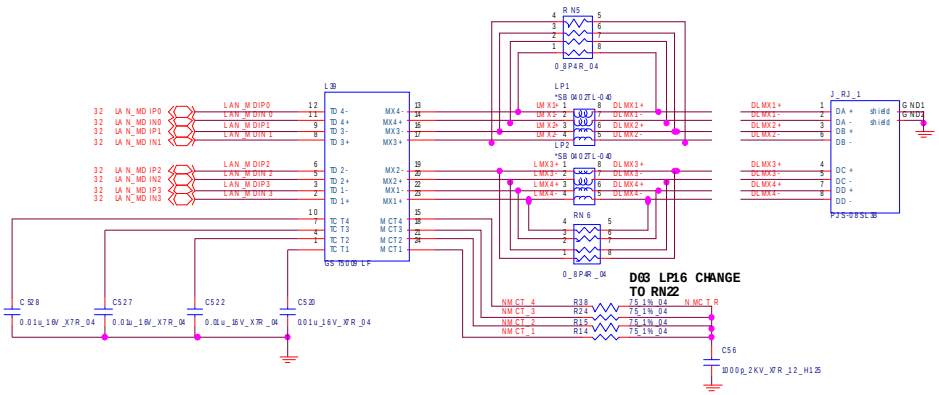

Sheet 34 of 53
RJ45, Modem

MDC

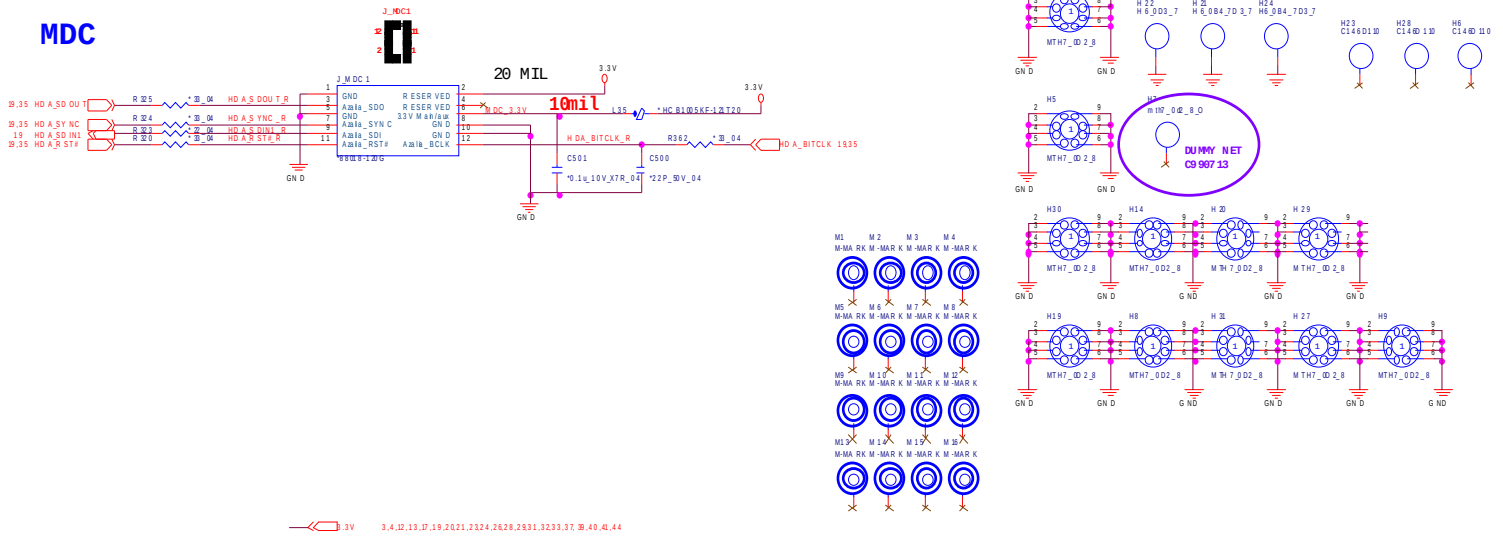

Audio Codec ALC272

Sheet 35 of 53
Audio Codec
ALC272

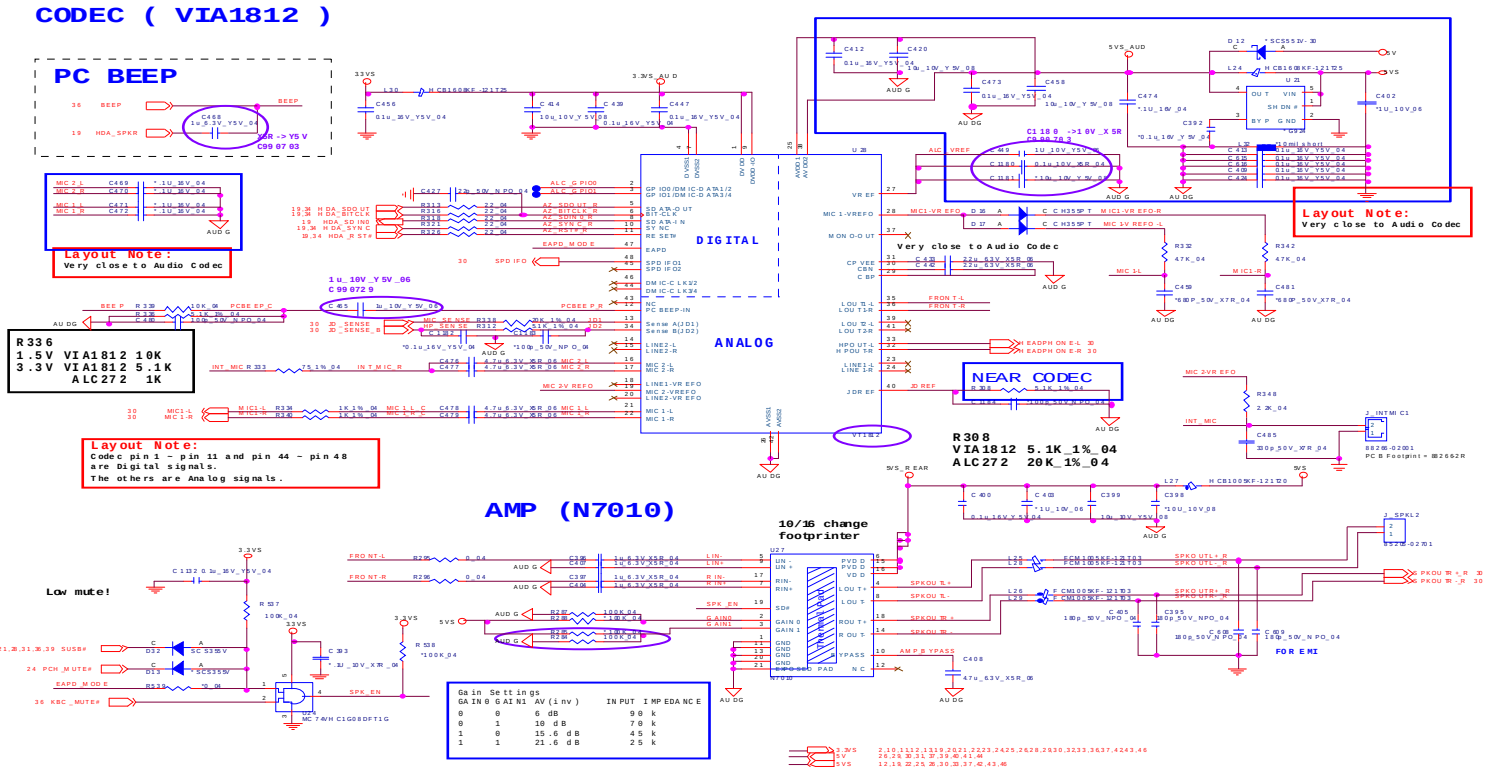

KBC-ITE IT8518

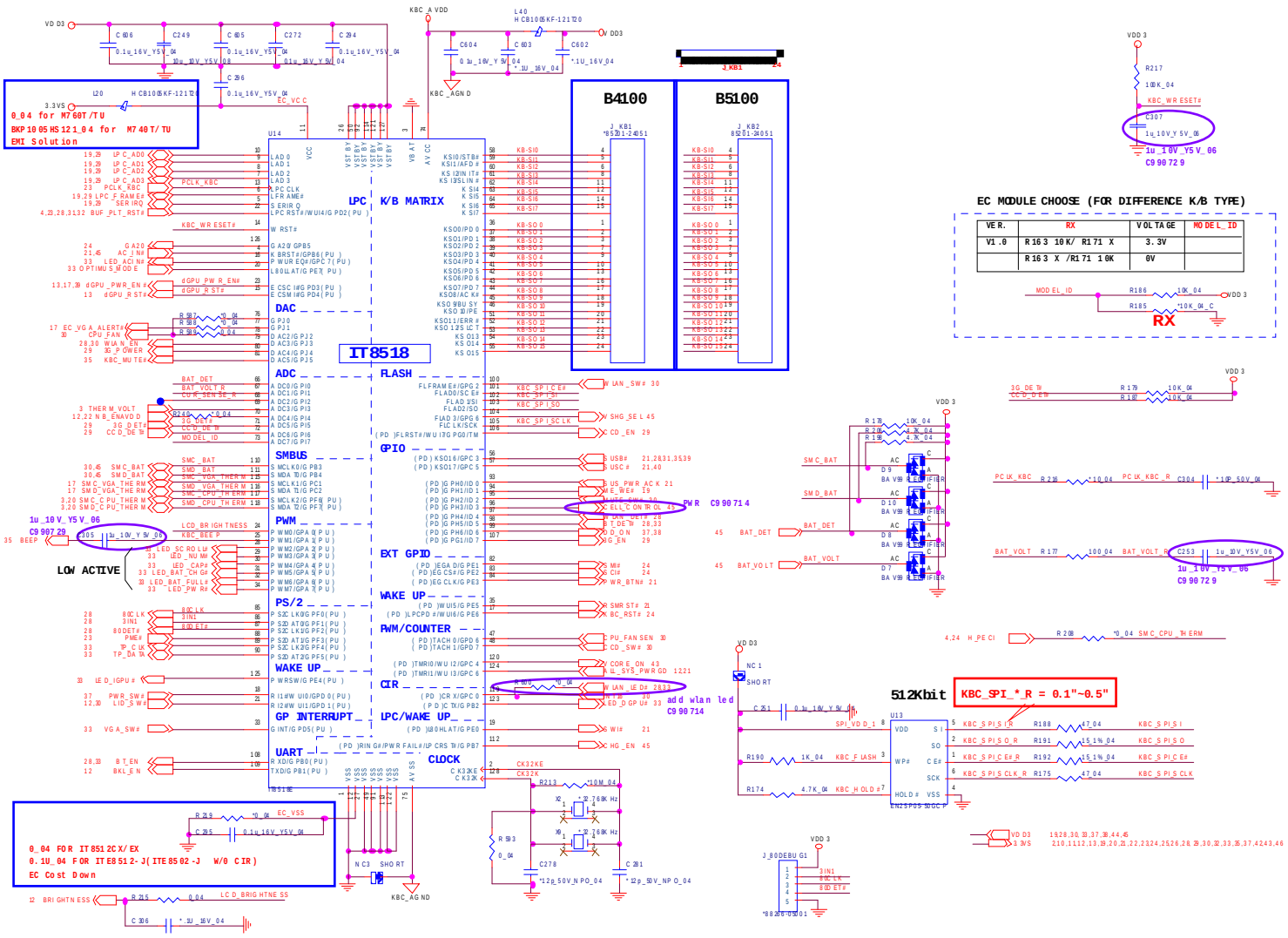

Sheet 36 of 53
KBC-ITE IT8518

5VS, 3.3VS, 1.5VS, VIN1

Sheet 37 of 53
5VS, 3.3VS, 1.5VS, VIN1

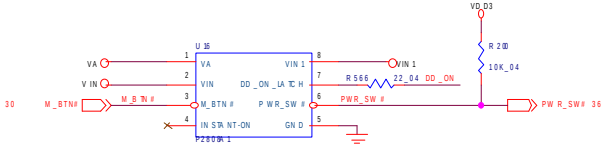

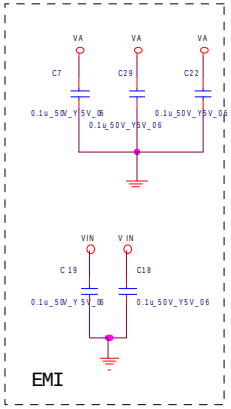

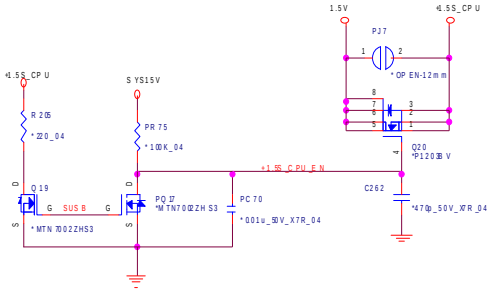

5V

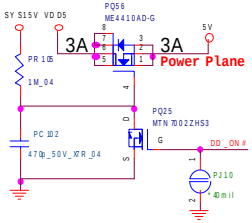

5VS

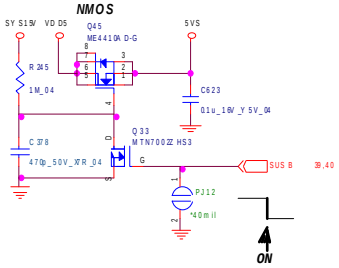

1.8VS

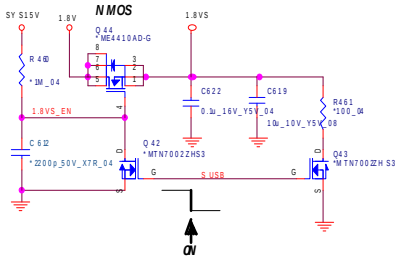

1.5VS

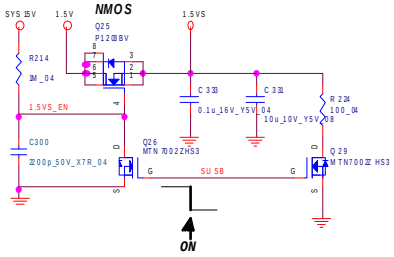

3.3V

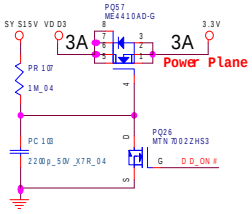

3.3VS

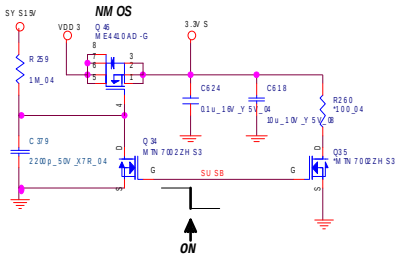

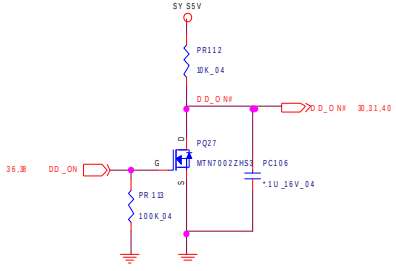

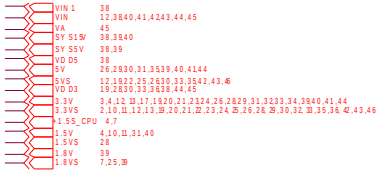

VDD3, VDD5

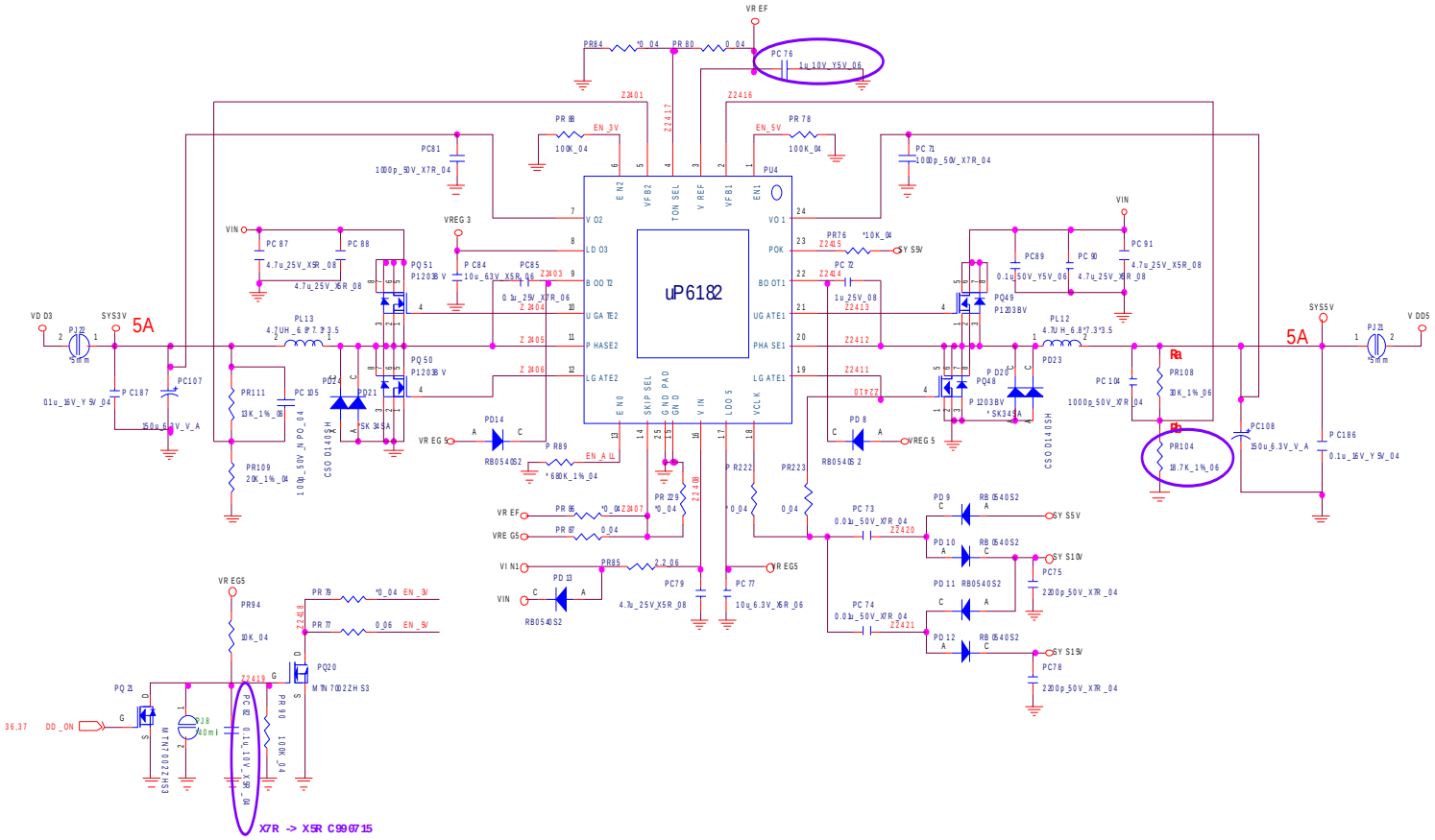

Sheet 38 of 53
VDD3, VDD5

Power 1.8V, PEX_VDD

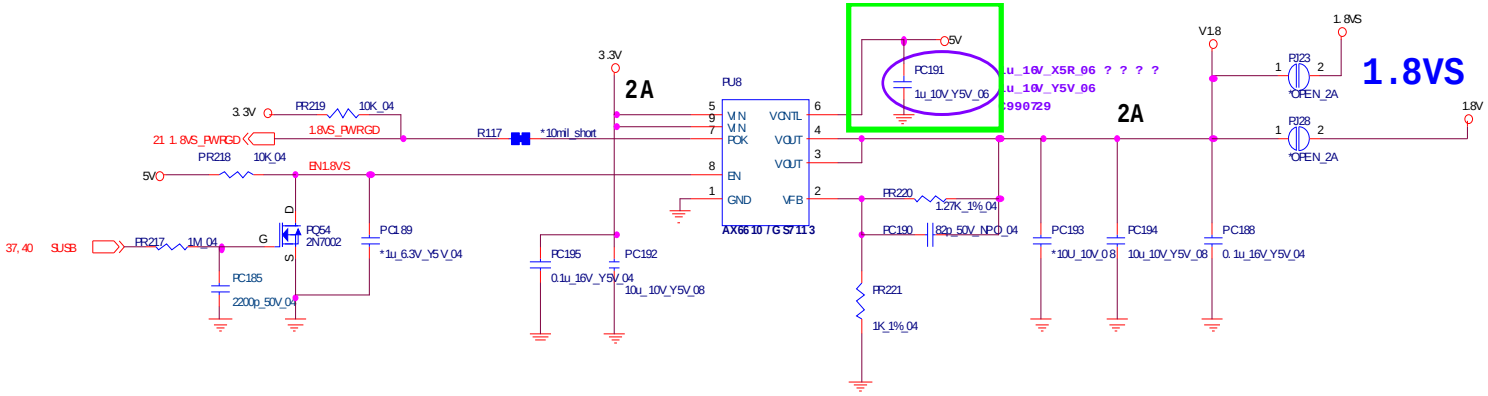

Sheet 39 of 53
Power 1.8V, PEX_VDD

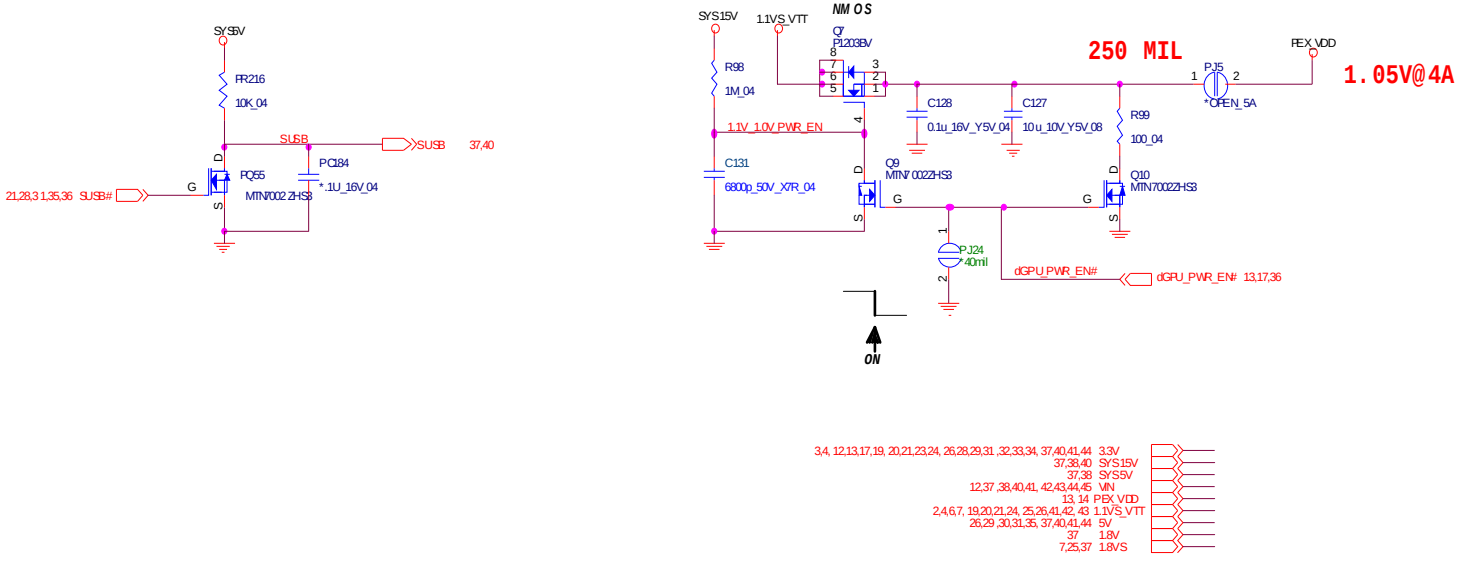

Power 1.5V/0.75V

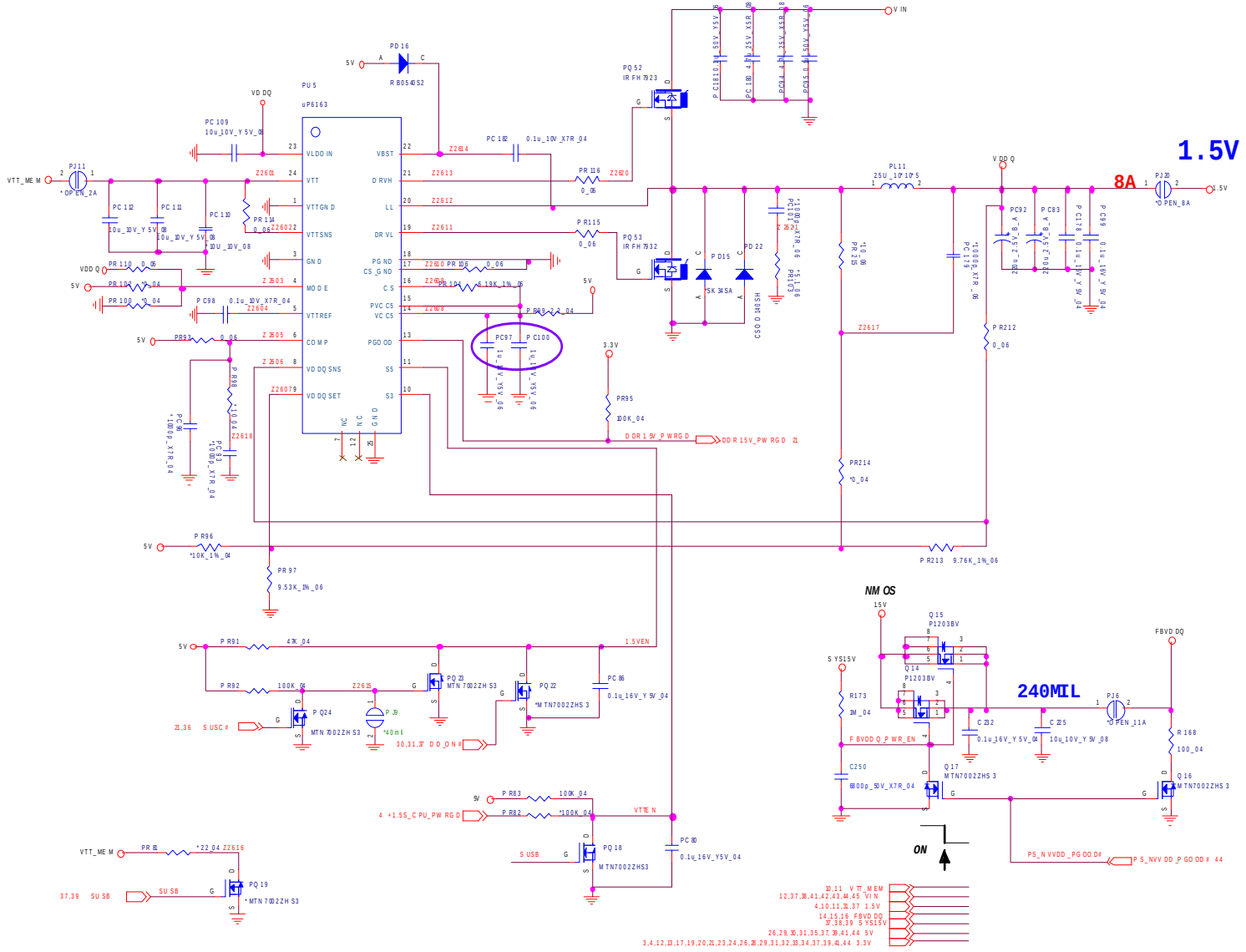

Sheet 40 of 53
Power 1.5V/0.75V

Power 1.1VS_VTT

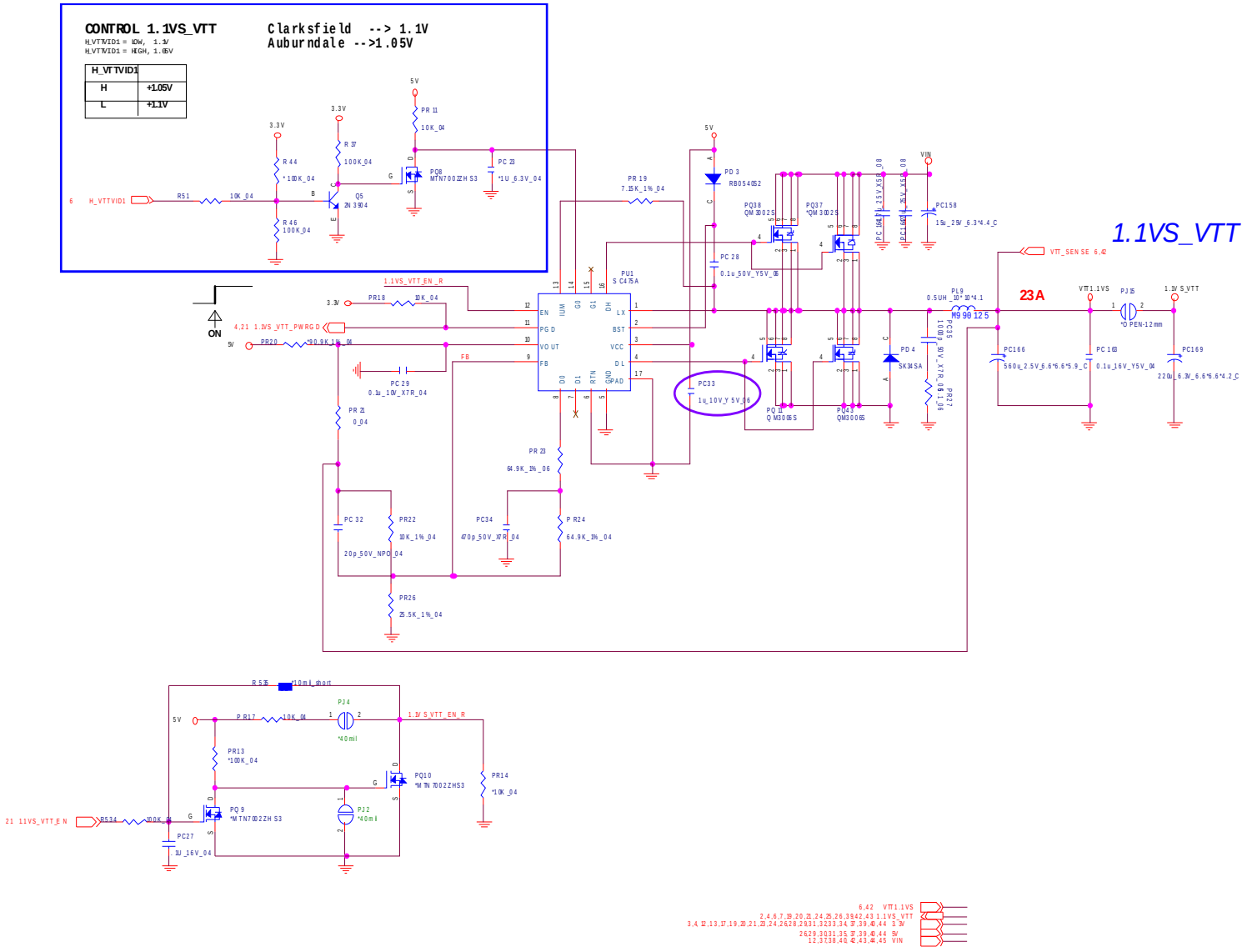

Sheet 41 of 53
Power 1.1VS_VTT

Power VGFX_Core

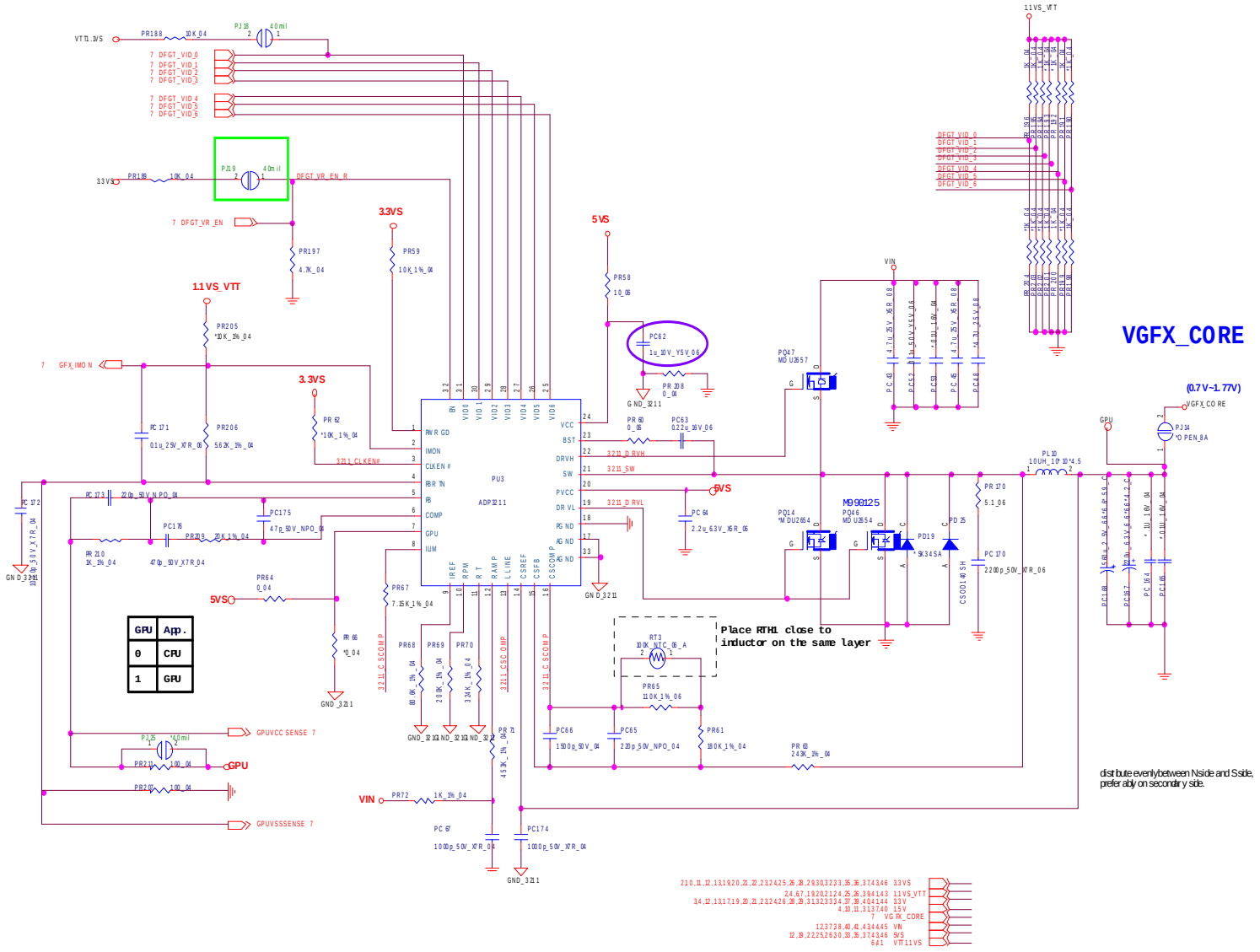

Sheet 42 of 53
Power VGFX_Core

V-Core

Sheet 43 of 53
V-Core

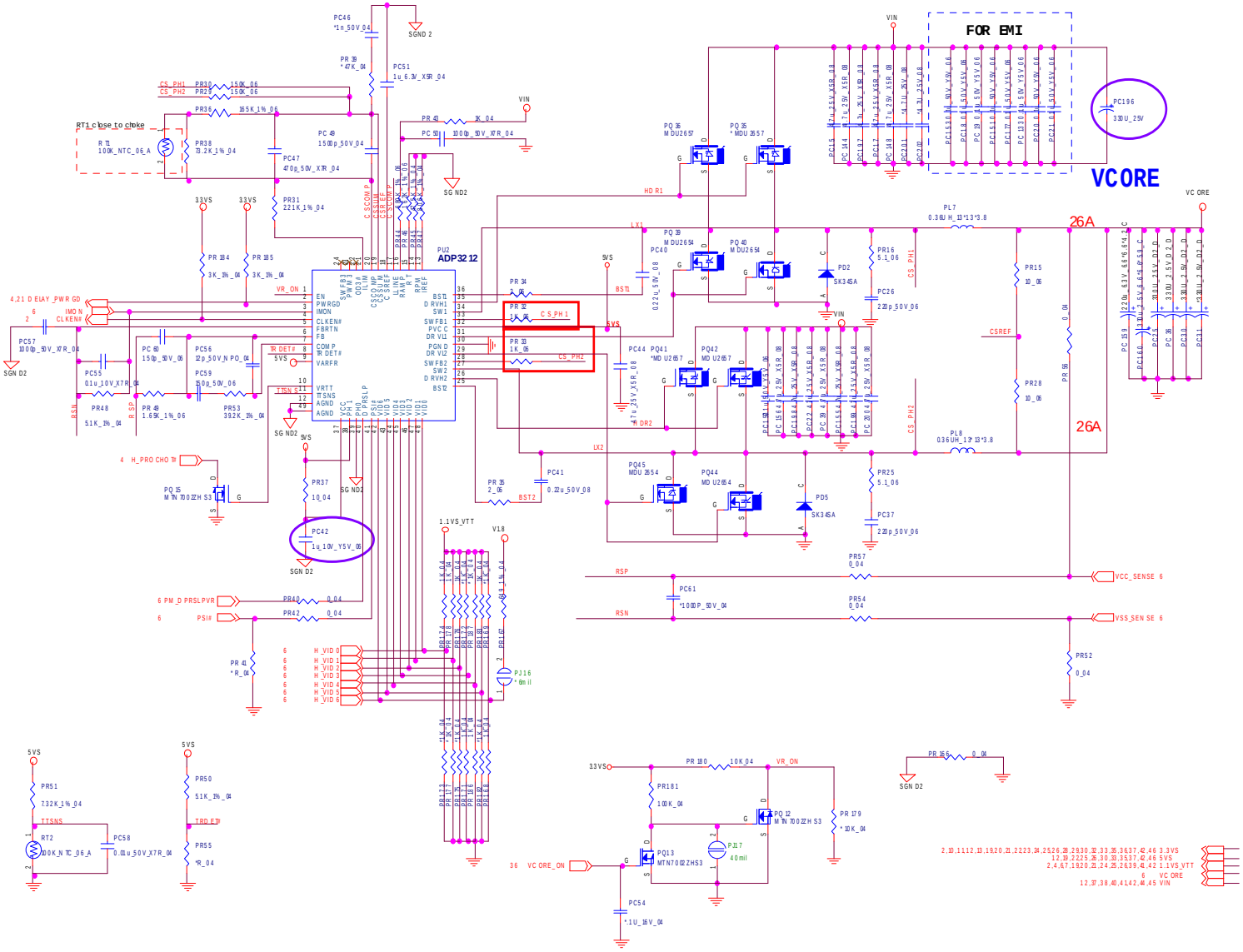

Power VGA NVVDD

NVIDIA N11P-GE1

	0.95V	0.90V	0.85V	0.80V
GPIO5_NVVDD_VID0	0	1	0	1
GPIO6_NVVDD_VID1	0	0	1	1

NVIDIA N11M-OP1

	1.03V	0.95V	0.85V	0.80V
GPIO5_NVVDD_VID0	0	1	0	1
GPIO6_NVVDD_VID1	0	0	1	1

	PR131	PR132	PR139	PR142	PR143	PR144
B4100 N11M-OP1	15K_1%	75K_1%	6.8K_1%	20K_1%	100K_1%	10K_1%
B5100 N11P-GE1	10K_1%	20K_1%	2K_1%	4.99K_1%	30K_1%	10K_1%

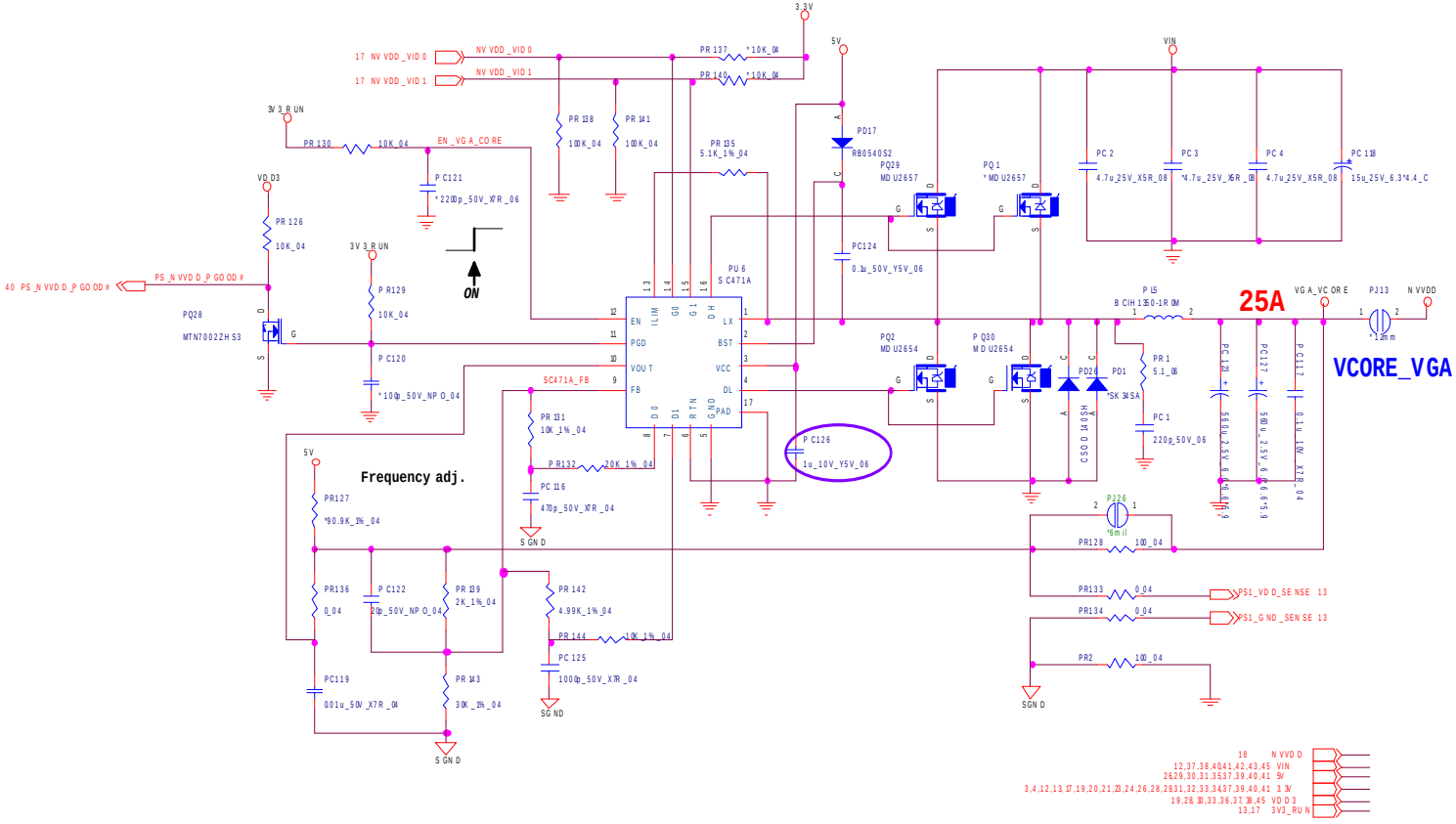

Sheet 44 of 53
Power VGA NVVDD

AC_IN, Charger

Sheet 45 of 53
AC_IN, Charger

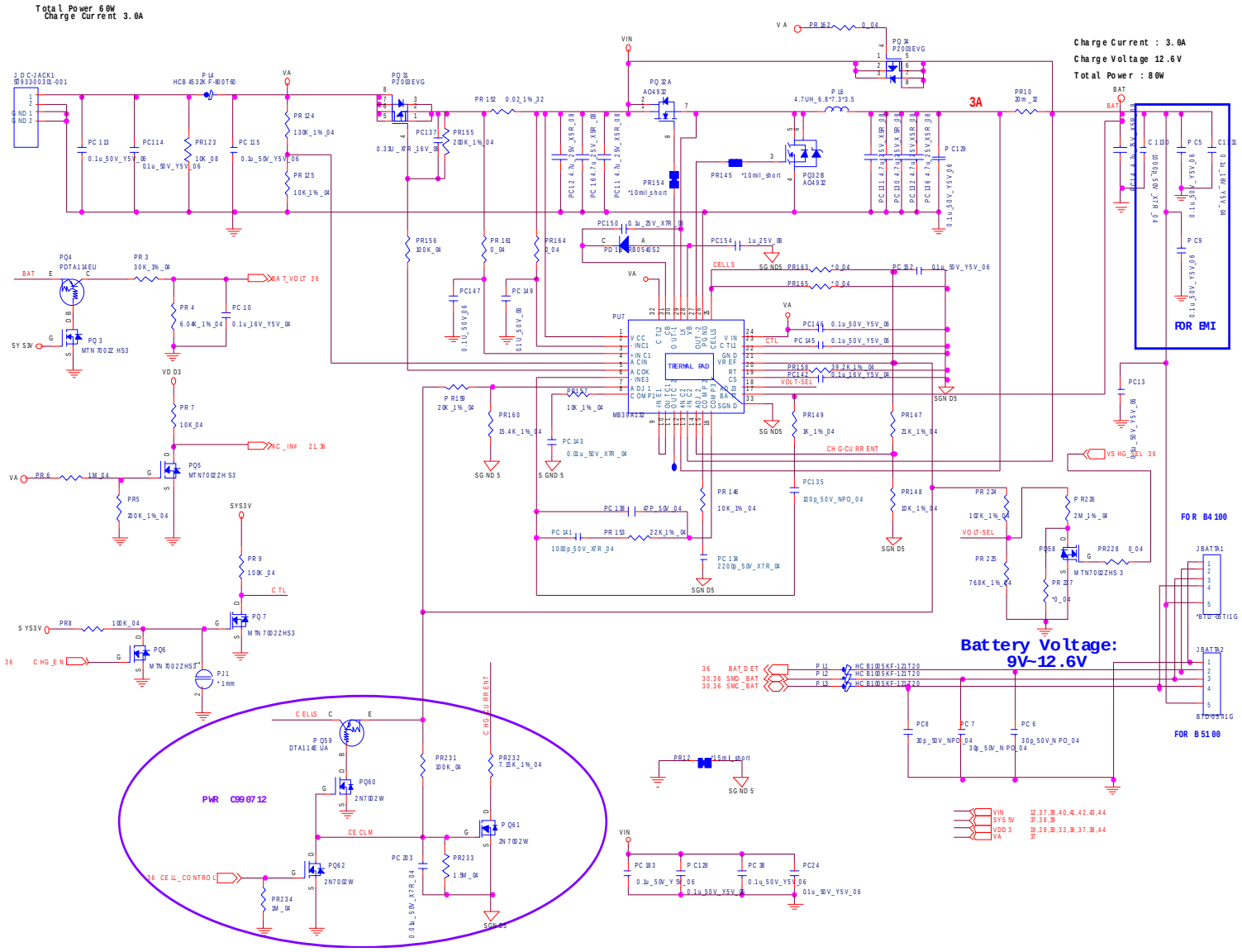

HDMI

HDMI CONNECTOR

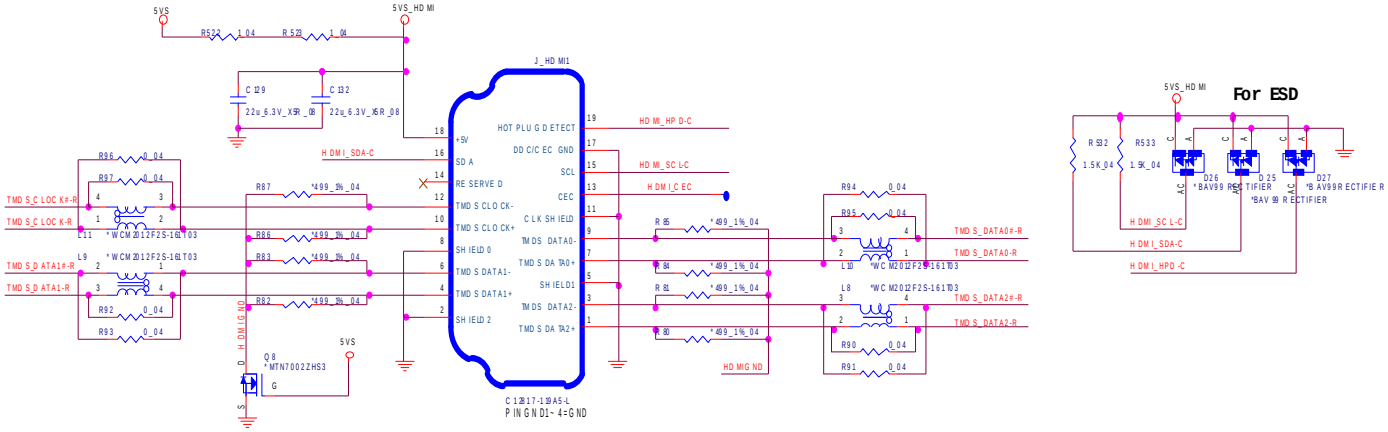

Sheet 46 of 53
HDMI

FOR INTEL GRAPHIC

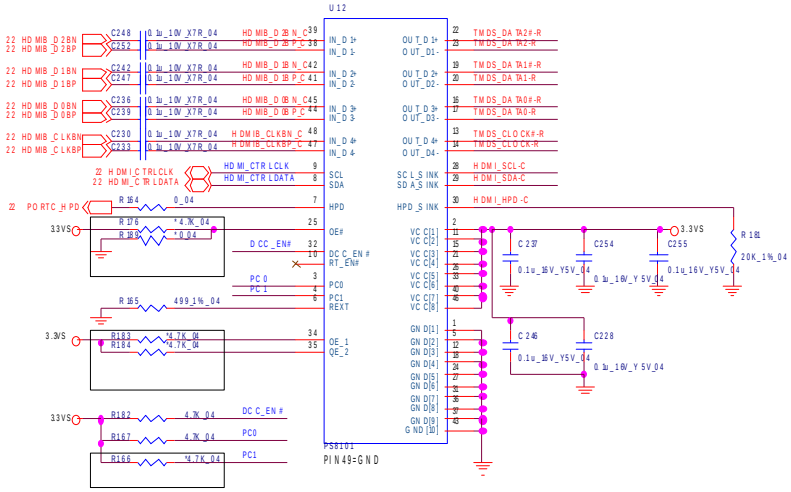

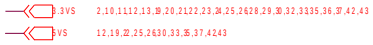

B.Schematic Diagrams

Audio Board

RJ-11

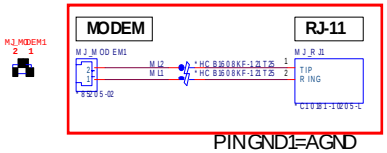

USB PORT

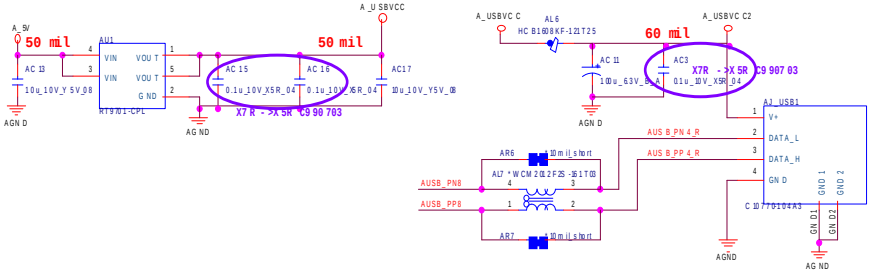

Sheet 47 of 53
Audio Board

AUDIO JACK

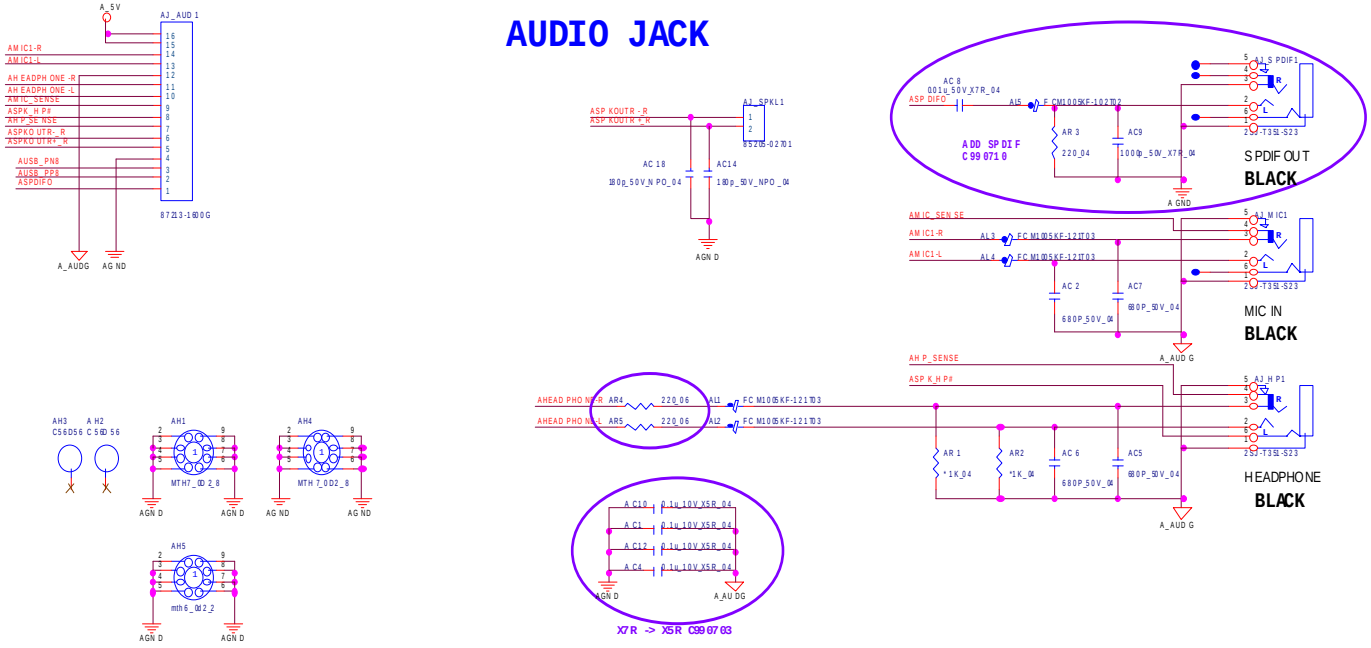

B5100 Second HDD Board

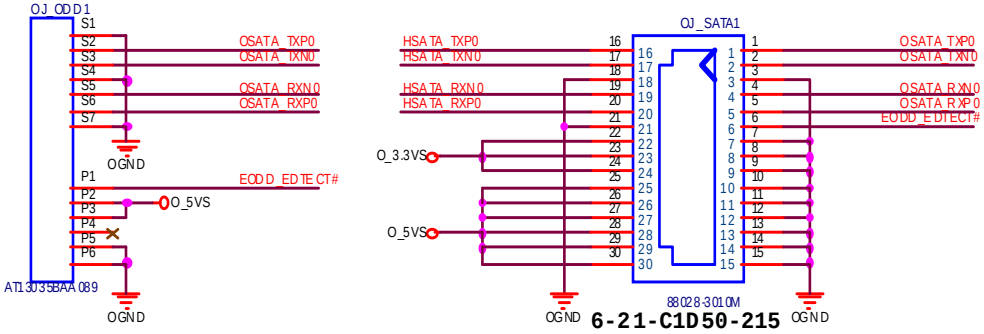

Sheet 48 of 53
B5100 Second HDD Board

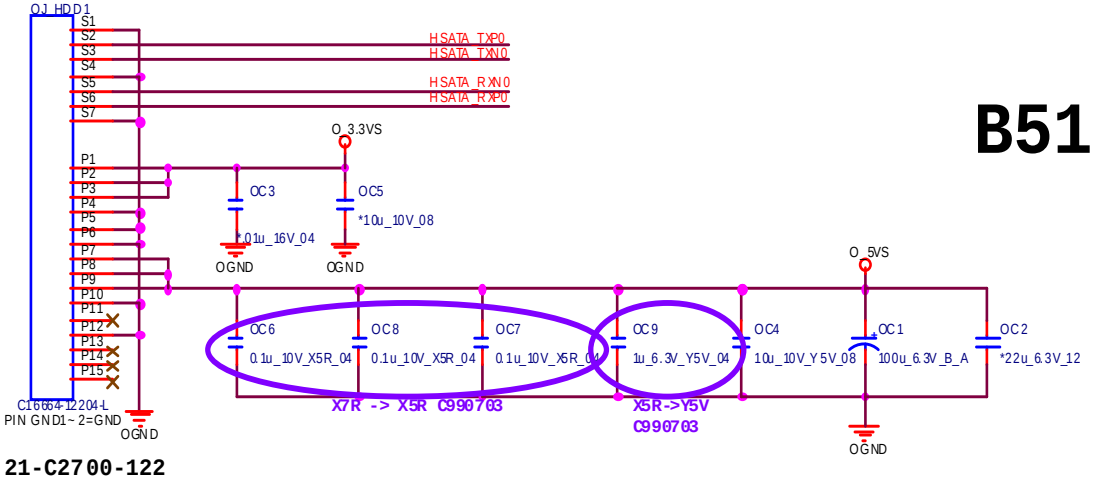

B5100M ONLY

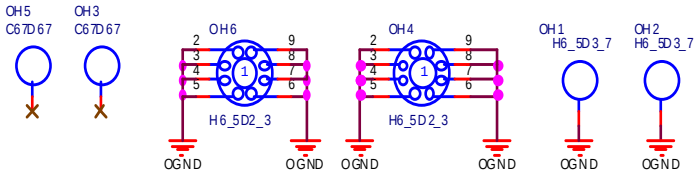

B5100 Click Board

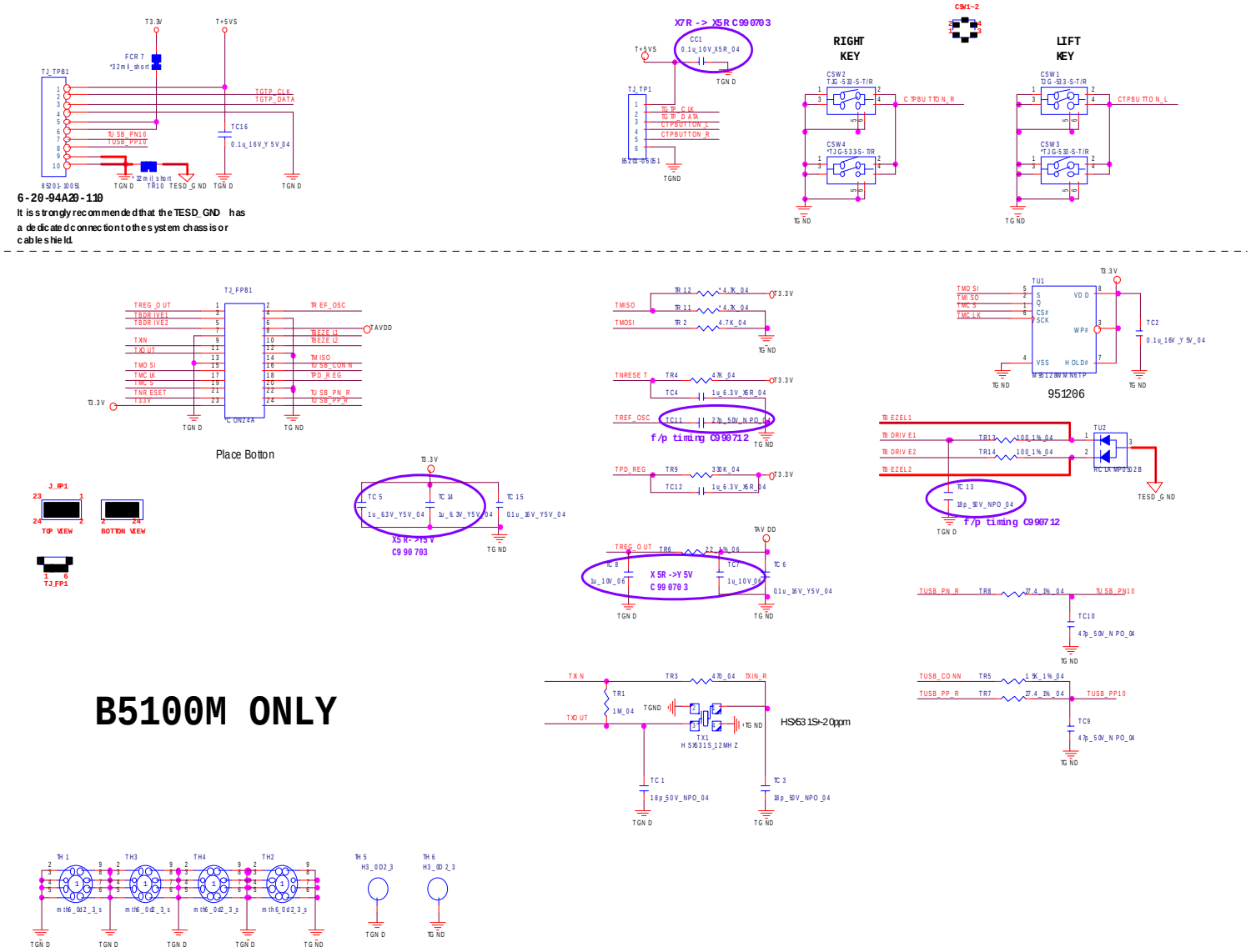

Sheet 49 of 53
B5100 Click Board

B5100M ONLY

B5100 Fingerprint Board

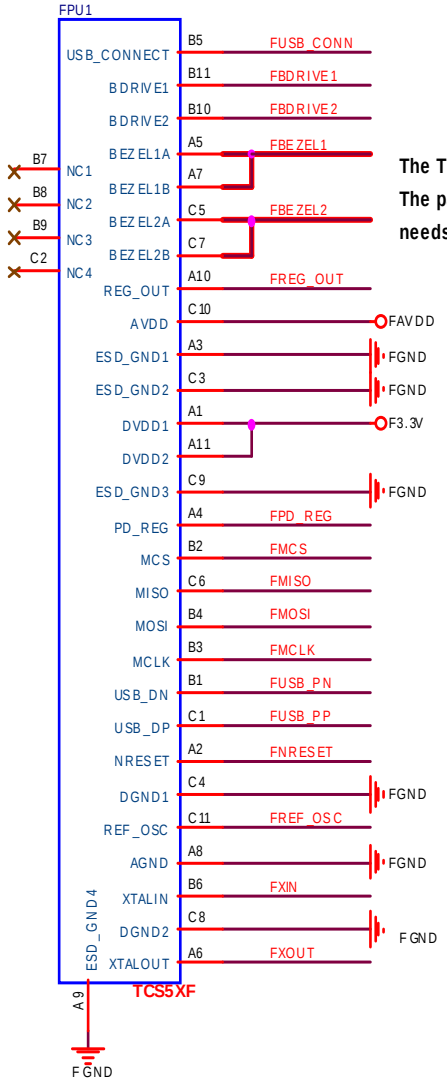

The TESD_GND trace has to be wide (> 20mil)
The path be marked in RED
needs to be design to be short and at low impedance.

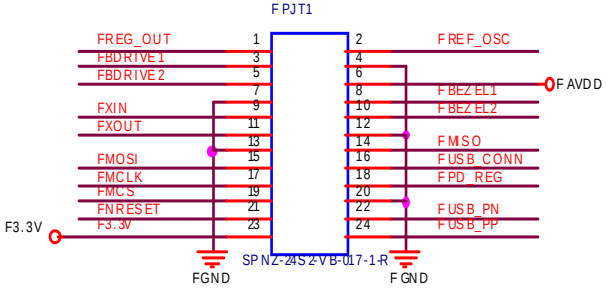

6-21-41710-212

Sheet 50 of 53
B5100 Fingerprint Board

B5100M ONLY

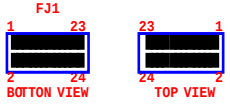

B5100 Power Switch Board

Sheet 51 of 53
B5100 Power
Switch Board

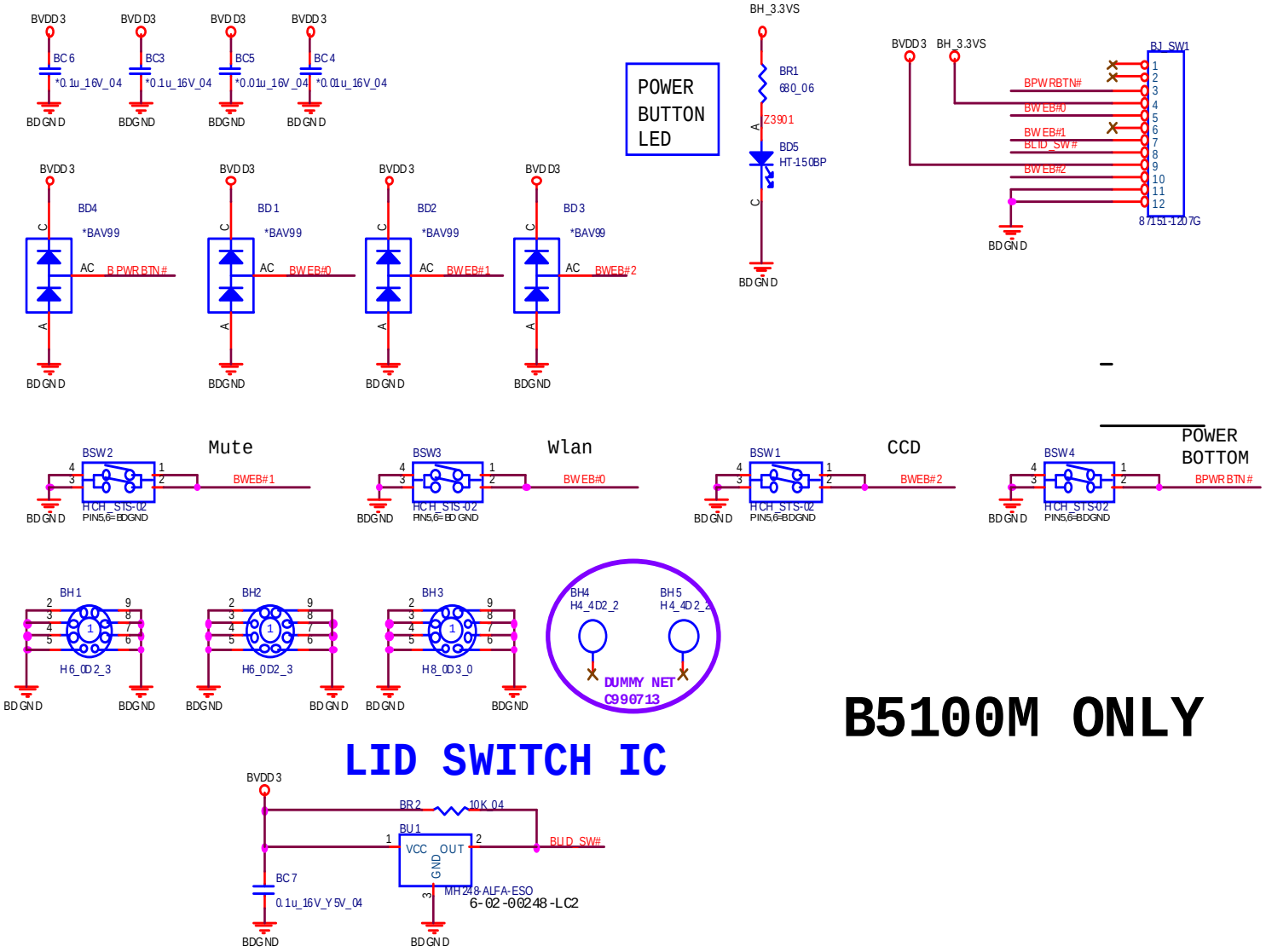

B5100 LED & VGA SW Board

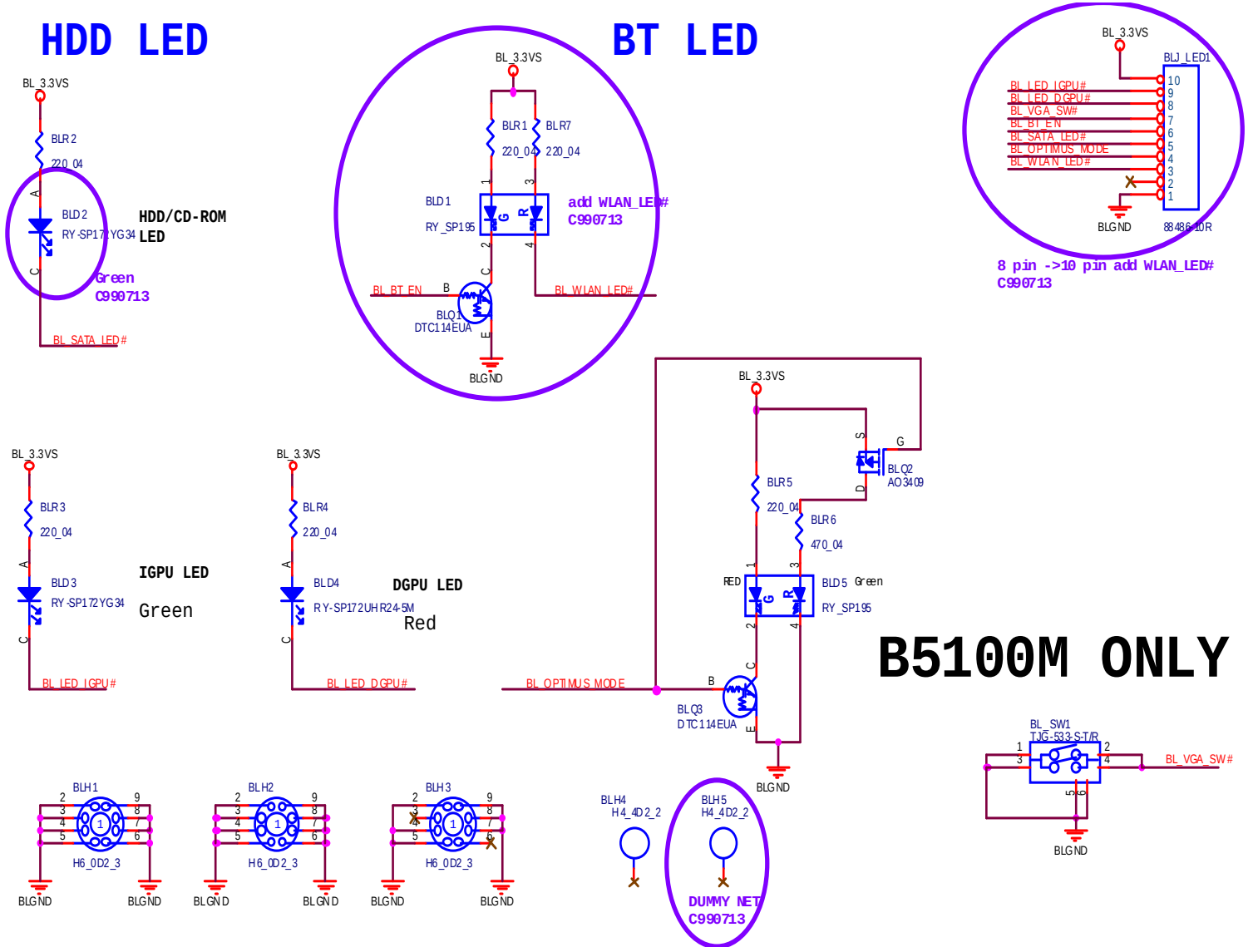

Sheet 52 of 53
B5100 LED & VGA
SW Board

Sequence

Sheet 53 of 53
Sequence

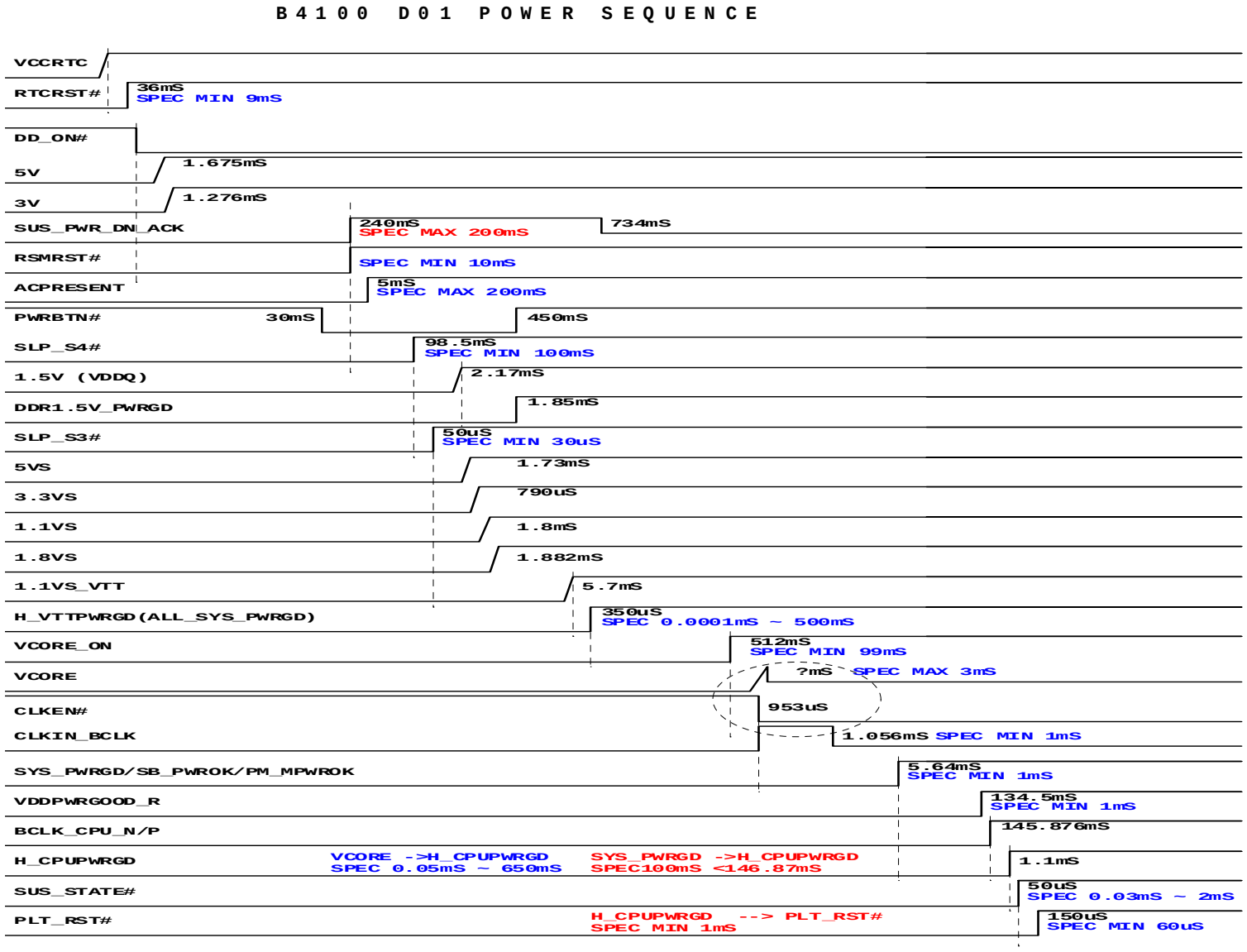

Appendix C:Updating the FLASH ROM BIOS

To update the FLASH ROM BIOS you must:

- Download the BIOS update from the web site.
- Unzip the files onto a bootable CD/DVD/USB Flash Drive.
- Reboot your computer from an external CD/DVD/USB Flash Drive.
- Use the flash tools to update the flash BIOS using the commands indicated below.
- Restart the computer booting from the HDD and press **F2** at startup enter the BIOS.
- Load setup defaults from the BIOS and save the default settings and exit the BIOS to restart the computer.
- After rebooting the computer you may restart the computer again and make any required changes to the default BIOS settings.

Download the BIOS

1. Go to **www.clevo.com.tw** and point to **E-Services** and click **E-Channel**.
2. Use your user ID and password to access the appropriate download area (BIOS), and download the latest BIOS files (the BIOS file will be contained in a batch file that may be run directly once unzipped) for your computer model (**see sidebar for important information on BIOS versions**).

Unzip the downloaded files to a bootable CD/DVD/ or USB Flash drive

1. Insert a bootable CD/DVD/USB flash drive into the CD/DVD drive/USB port of the computer containing the downloaded files.
2. Use a tool such as Winzip or Winrar to unzip all the BIOS files and refresh tools to your bootable CD/DVD/USB flash drive (you may need to create a bootable CD/DVD with the files using a 3rd party software).

Set the computer to boot from the external drive

1. With the bootable CD/DVD/USB flash drive containing the BIOS files in your CD/DVD drive/USB port, restart the computer and press **F2** (in most cases) to enter the BIOS.
2. Use the arrow keys to highlight the **Boot** menu.
3. Use the "+" and "-" keys to move boot devices up and down the priority order.
4. Make sure that the CD/DVD drive/USB flash drive is set first in the boot priority of the BIOS.
5. Press **F10** to save any changes you have made and exit the BIOS to restart the computer.

BIOS Version

Make sure you download the latest correct version of the BIOS appropriate for the computer model you are working on.

You should only download BIOS versions that are V1.01.XX or higher as appropriate for your computer model.

Note that BIOS versions are not backward compatible and therefore **you may not downgrade your BIOS to an older version** after upgrading to a later version (e.g if you upgrade a BIOS to ver 1.01.05, you **MAY NOT** then go back and flash the BIOS to ver 1.01.04).

Use the flash tools to update the BIOS

1. Make sure you are not loading any memory management programs such as HIMEM by holding the **F8** key as you see the message "**Starting MS-DOS**". You will then be prompted to give "**Y**" or "**N**" responses to the programs being loaded by DOS. Choose "N" for any memory management programs.
2. You should now be at the DOS prompt e.g: DISK **C**:\> (C is the designated drive letter for the CD/DVD drive/USB flash drive).
3. **Type the following command** at the DOS prompt:

   C:\> Flash.bat

4. The utility will then proceed to flash the BIOS.
5. You should then be prompted to press any key to restart the system or turn the power off, and then on again but make sure you remove the CD/DVD/USB flash drive from the CD/DVD drive/USB port before the computer restarts.

Restart the computer (booting from the HDD)

1. With the CD/DVD/USB flash drive removed from the CD/DVD drive/USB port the computer should restart from the HDD.
2. Press **F2** as the computer restarts to enter the BIOS.
3. Use the arrow keys to highlight the **Exit** menu.
4. Select **Load Setup Defaults** (or press **F9**) and select "**Yes**" to confirm the selection.
5. Press **F10** to save any changes you have made and exit the BIOS to restart the computer.

Your computer is now running normally with the updated BIOS

You may now enter the BIOS and make any changes you require to the default settings.