# NFL-P G72D BSW UMA (14"/15.6")

# Intel Braswell-M Platform Block Diagram

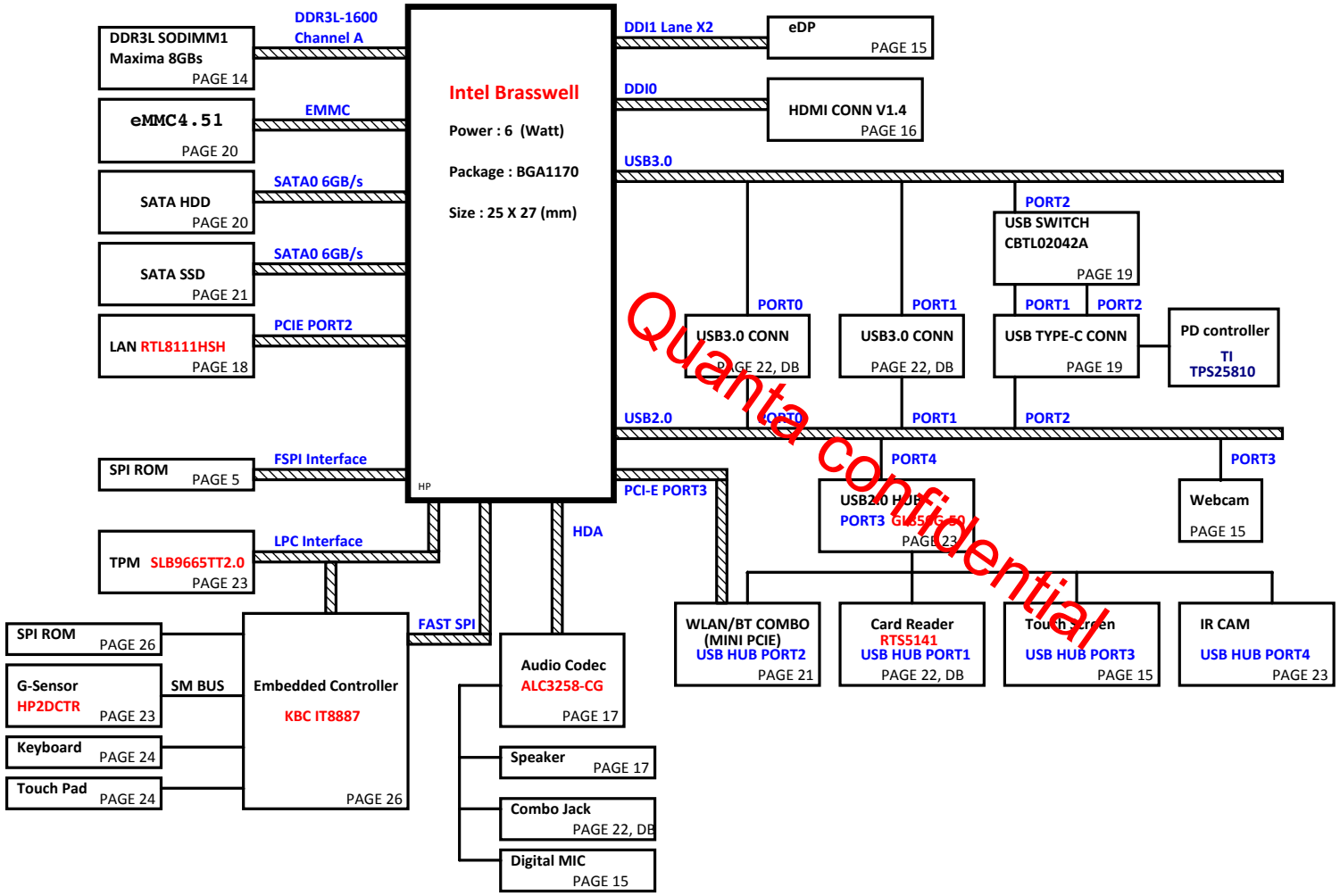


Quanta Confidential

PCB 6L STACK UP

LAYER 1 : TOP
LAYER 2 : SVCC
LAYER 3 : IN1(LOW)
LAYER 4 : IN2(HIGH)
LAYER 5 : SGND
LAYER 6 : BOT


Charger PG.27
+3VS5/+5VS5 PG.28
DDR3L PG.29
MOIC PG.30
VGG & VCC CORE PG.31, 32
SYS Power PG.33


**PROJECT : G72D**
Quanta Computer Inc.

| Size | Document Number | Rev |
|---|---|---|
| Custom | Braswell Block Diagram | 1A |

Date: Tuesday, January 24, 2017 Sheet 1 of 35

www.vinafix.com

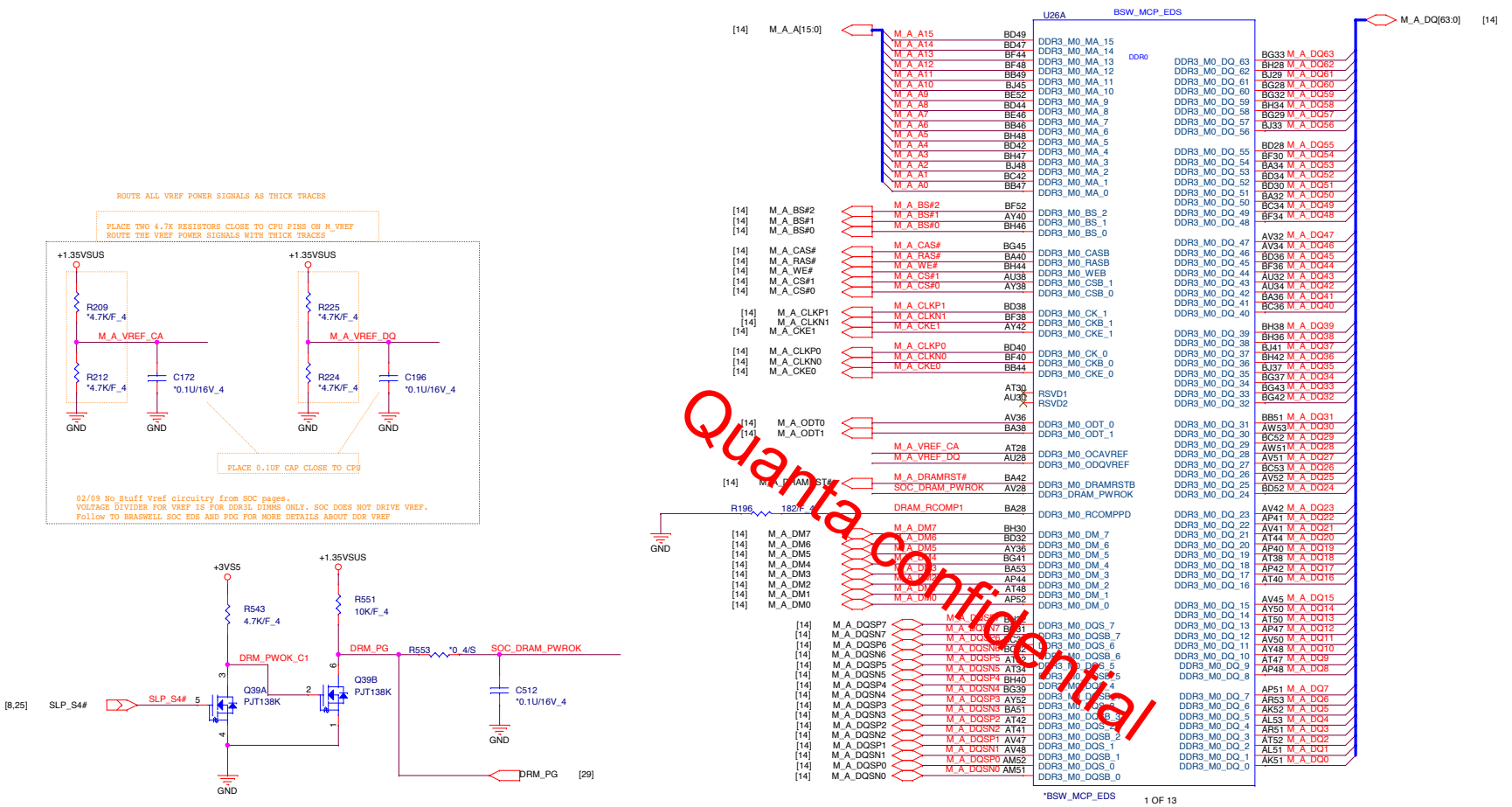


Quanta Confidential

**PROJECT : G72D**
Quanta Computer Inc.

| Size | Document Number | Rev |
|---|---|---|
| Custom | Braswell 1/11 (DDRA) | 1A |

Date: Tuesday, January 24, 2017 | Sheet 2 of 35

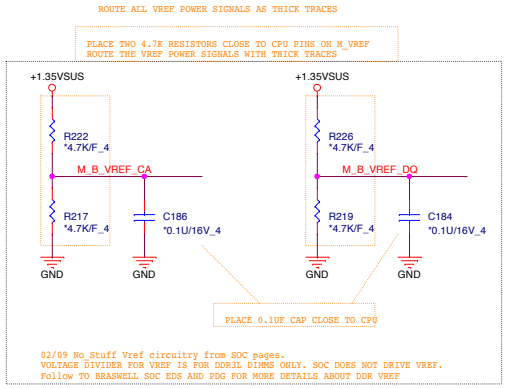


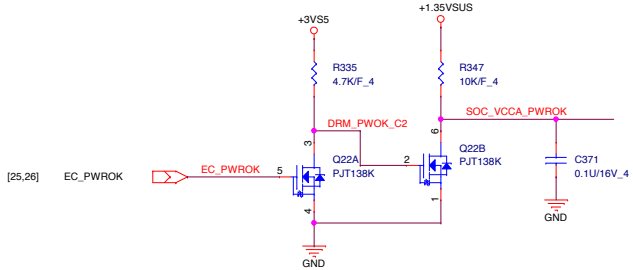


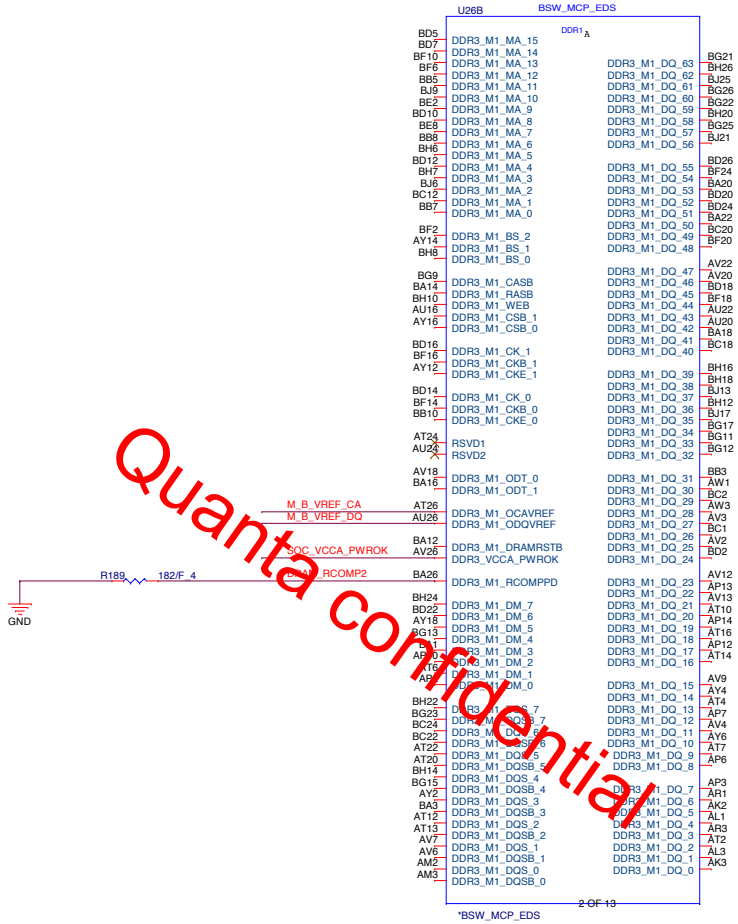


Quanta confidential

**PROJECT : G72D**

Quanta Computer Inc.

| Size | Document Number | Rev |
|---|---|---|
| Custom | Braswell 2/11 (DDRB) | 1A |

Date: Tuesday, January 24, 2017 | Sheet 3 of 35

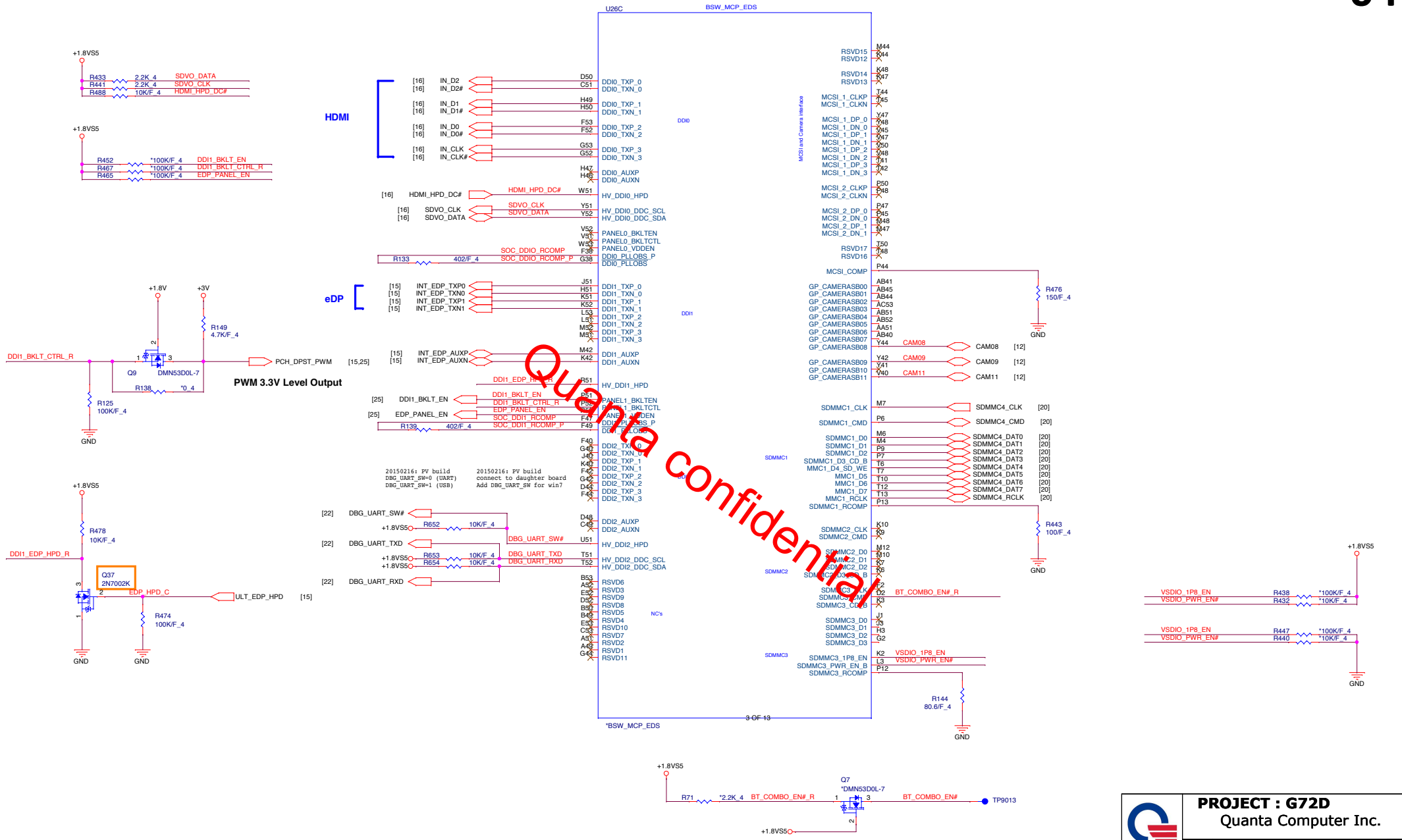


Quanta confidential

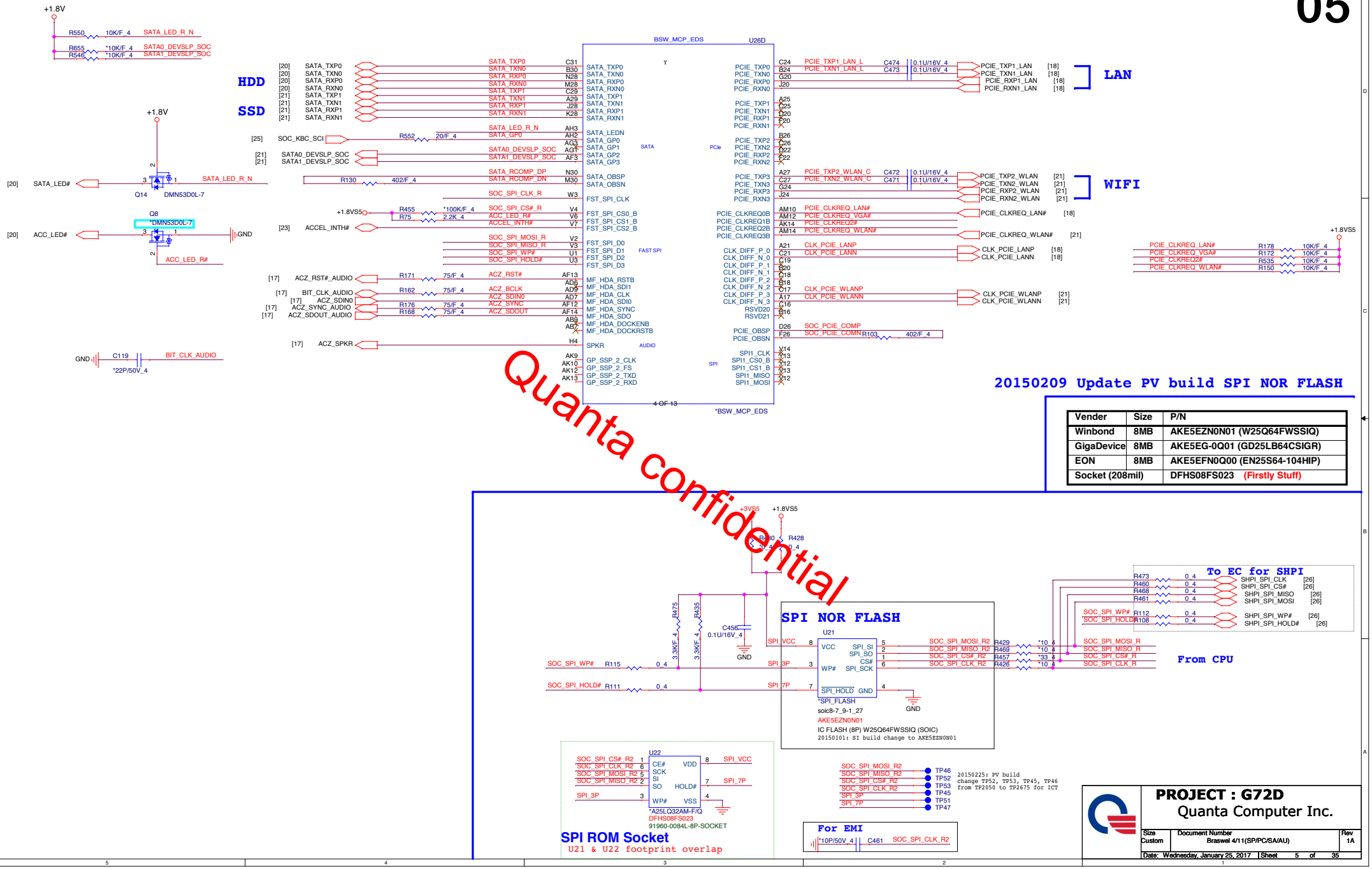


| Vender | Size | P/N |
|---|---|---|
| Winbond | 8MB | AKE5EZN0N01 (W25Q64FWSSIQ) |
| GigaDevice | 8MB | AKE5EG-0Q01 (GD25LB64CSIGR) |
| EON | 8MB | AKE5EFN0Q00 (EN25S64-104HIP) |
| Socket (208mil) | | DFHS08FS023 (Firstly Stuff) |

**PROJECT : G72D**

Quanta Computer Inc.

| Size | Document Number | Rev |
|---|---|---|
| Custom | Braswel 4/11(SP/PC/SA/AU) | 1A |

Date: Wednesday, January 25, 2017 | Sheet 5 of 35

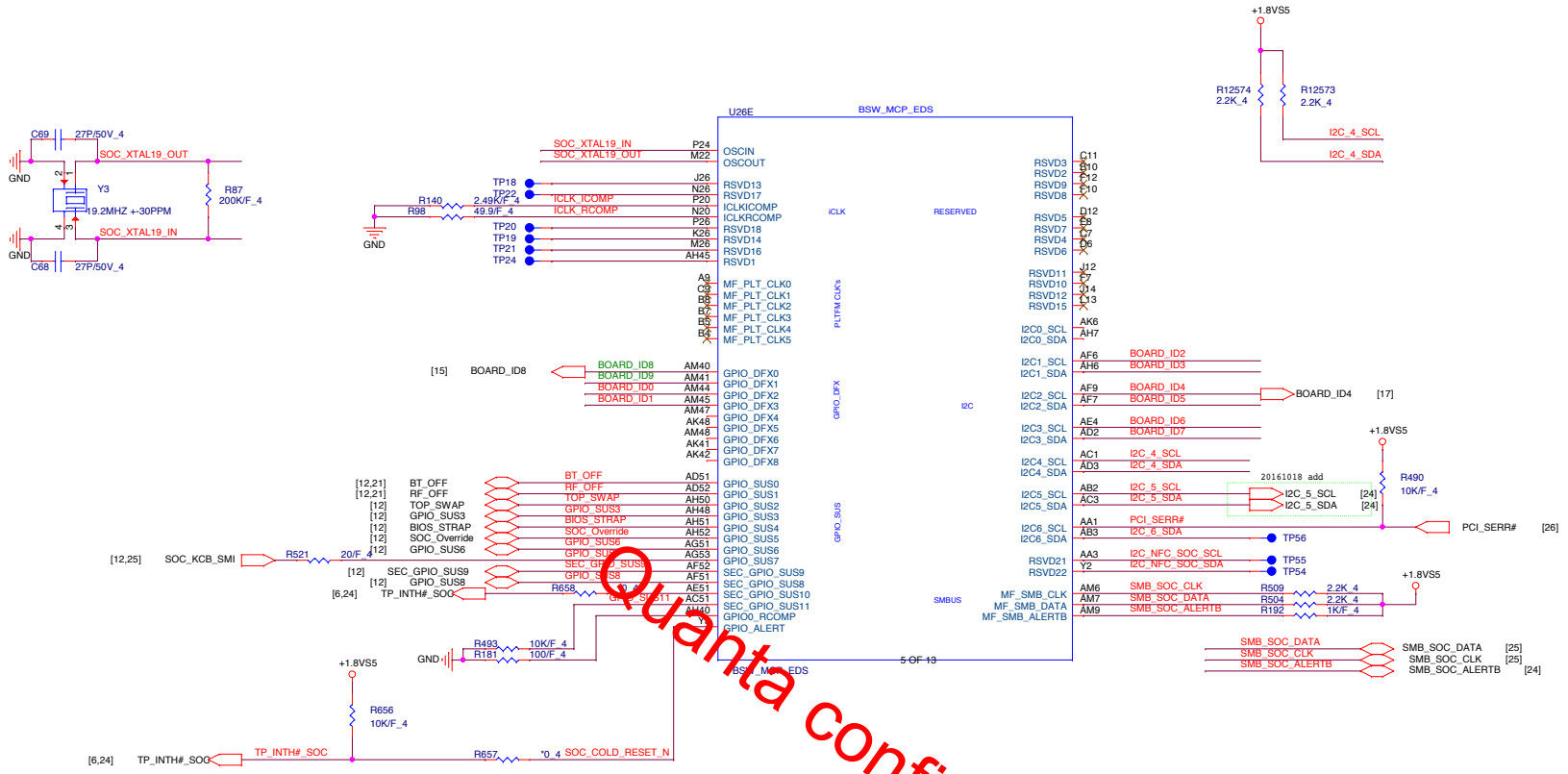


Quanta confidential

| Board ID | BIOS Strap Description |
|---|---|
| BOARD_ID0 | (Reserve) |
| BOARD_ID1 | SATA/EMMC SELECT |
| BOARD_ID2 | |
| BOARD_ID3 | 1 = TPM<br>0 = Non-TPM |
| BOARD_ID4 | SPK_ID (Reserve) |
| BOARD_ID5 | Memory Vendor for MD USE |
| BOARD_ID6 | |
| BOARD_ID7 | |
| BOARD_ID8 | 0 = ELAN Touchpad<br>1 = Synaptics Touchpad |
| BOARD_ID9 | 1 = SO-DIMM<br>0 = Memory Down |

| BOARD_ID7 | BOARD_ID6 | BOARD_ID5 | Vender | Quanta PN | Description |
|---|---|---|---|---|---|
| 0 | 0 | 0 | | | |
| 0 | 0 | 1 | | | |
| 0 | 1 | 0 | | | |
| 0 | 1 | 1 | | | |
| 1 | 0 | 0 | | | |
| 1 | 0 | 1 | | | |
| 1 | 1 | 0 | | | |
| 1 | 1 | 1 | | | |
| | | | | | |

| BOARD_ID1 | BOARD_ID2 | |
|---|---|---|
| 0 | 0 | EMMC only |
| 0 | 1 | EMMC +SATA |
| 1 | 0 | SATA only |
| 1 | 1 | (Reserve) |

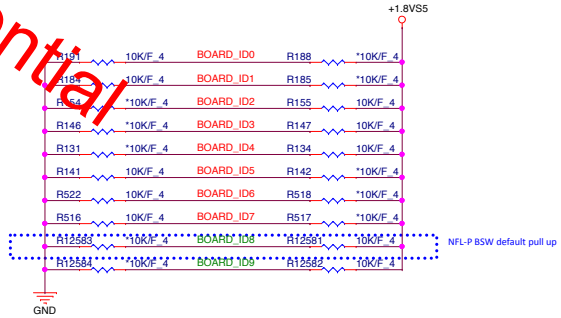


**PROJECT : G72D**

Quanta Computer Inc.

| Size | Document Number | Rev |
|---|---|---|
| Custom | Braswel 5/11(I2C/GPIO/CLK | 1A |

Date: Tuesday, January 24, 2017 Sheet 6 of 35

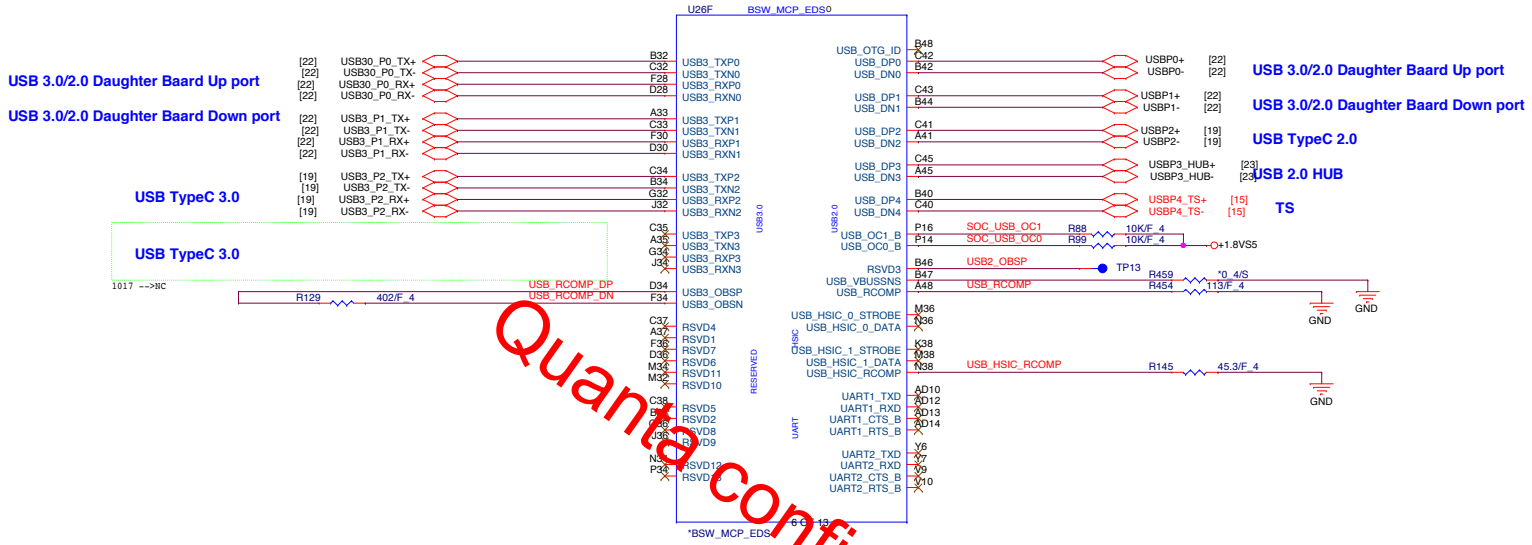


Quanta confidential

**PROJECT : G72D**

Quanta Computer Inc.

| Size | Document Number | Rev |
|---|---|---|
| Custom | Braswel 6/11 (USB/URAT) | 1A |

Date: Tuesday, January 24, 2017 Sheet 7 of 35

# RTC Clock 32.768KHz

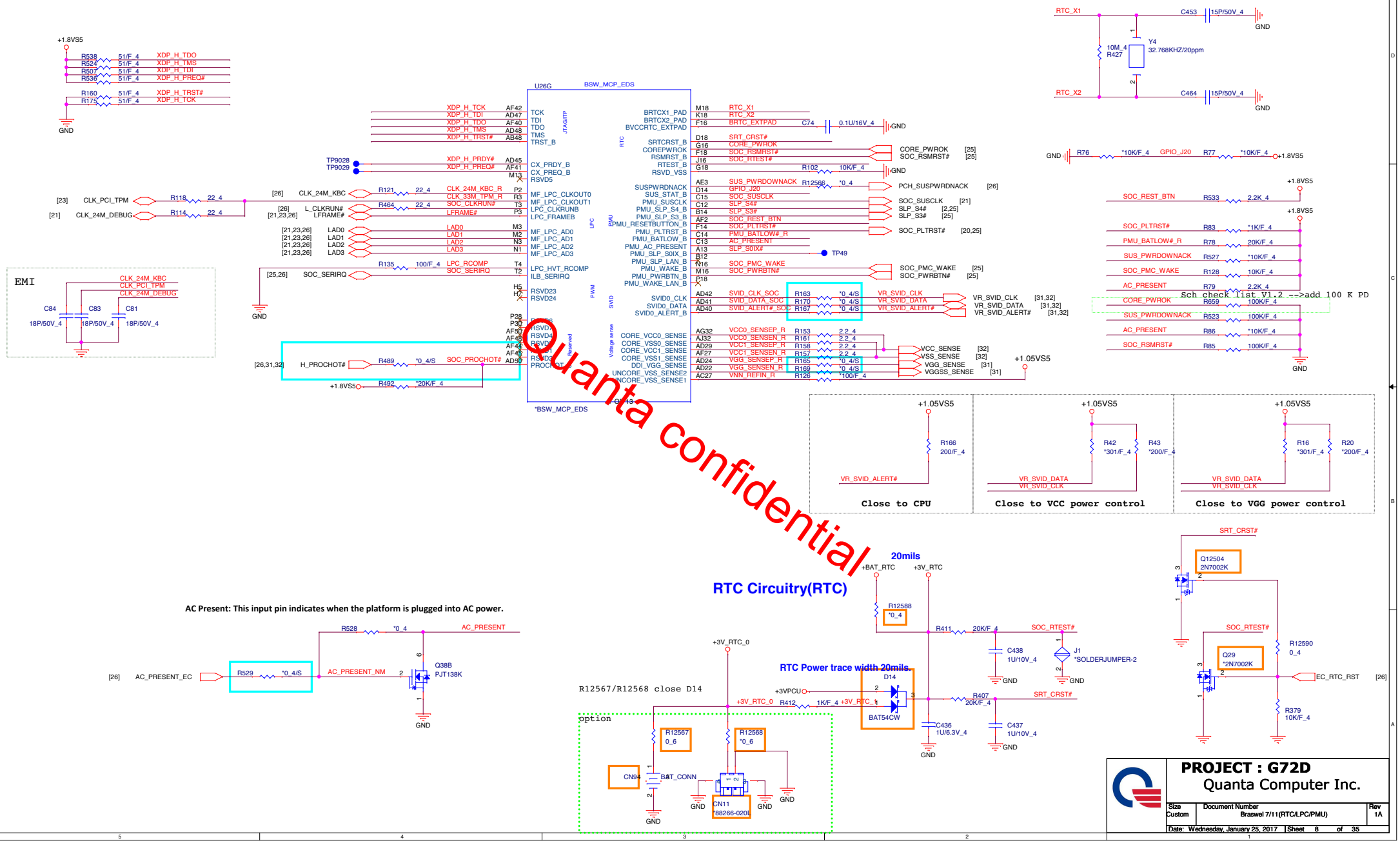


Quanta confidential

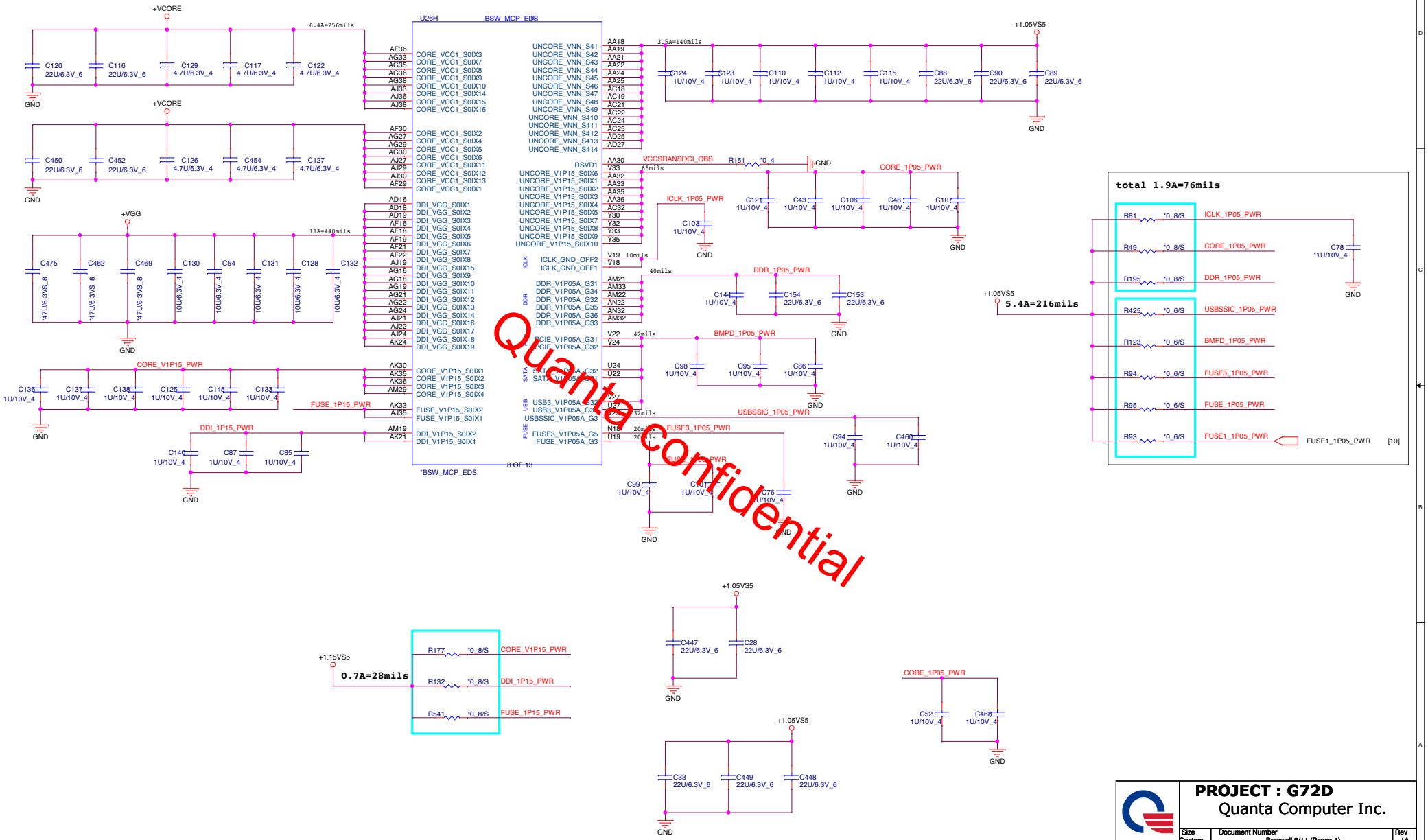


Quanta Confidential

**PROJECT : G72D**
Quanta Computer Inc.

| Size | Document Number | Rev |
|---|---|---|
| Custom | Braswell 8/11 (Power 1) | 1A |

Date: Tuesday, January 24, 2017 | Sheet 9 of 35

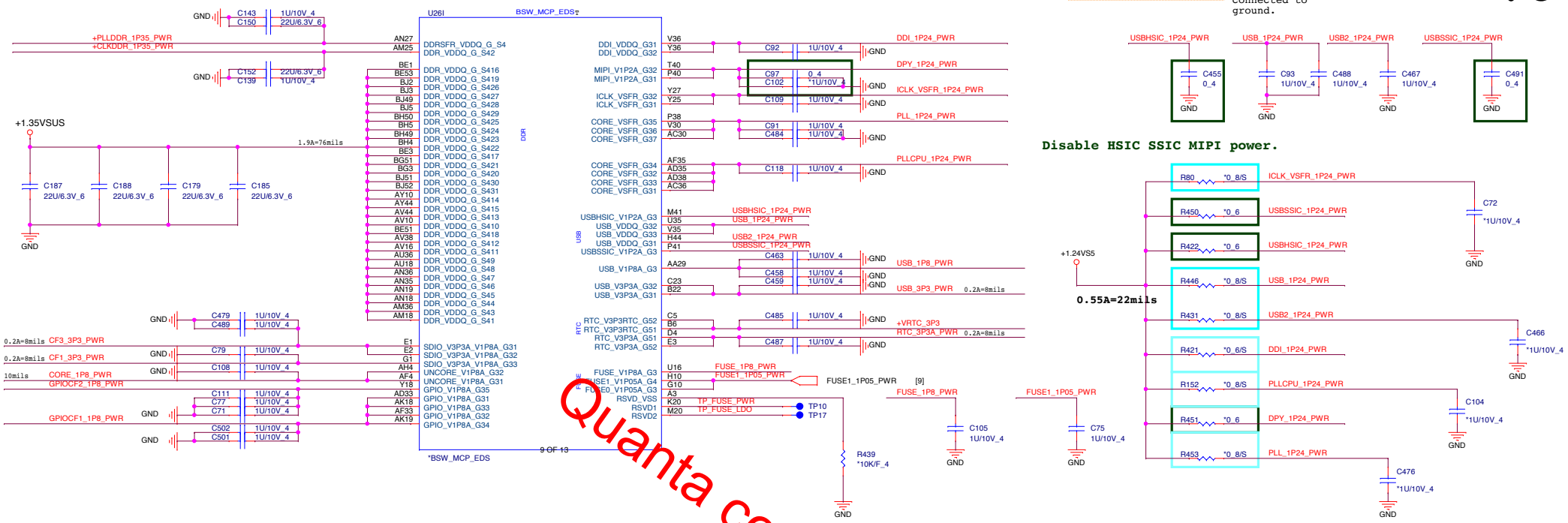


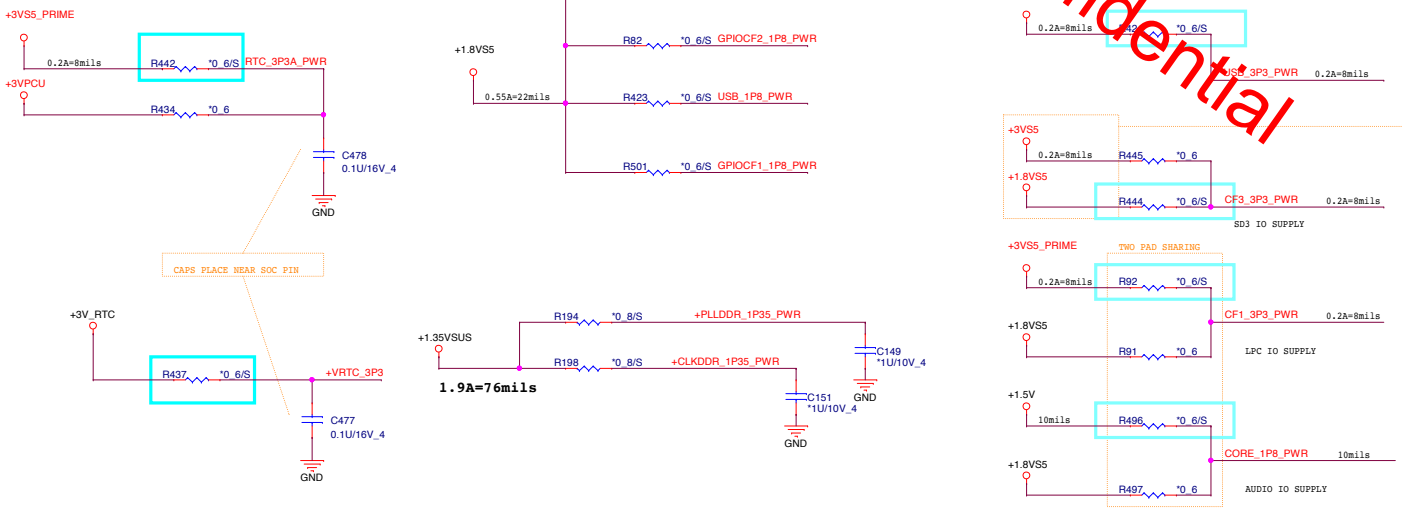


| VSDIO VOLTAGE SETTING (CF3_3P3_PWR) | | |
|---|---|---|
| SDMMC3_PWR_EN_N | SDMMC3_1P8_EN | VSDIO (V) |
| 1 | 0 | 0V |
| 1 | 1 | 0V |
| 0 | 0 | 3.3V |
| 0 | 1 | 1.8V |

Quanta confidential

**PROJECT : G72D**
Quanta Computer Inc.

| Size | Document Number | Rev |
|---|---|---|
| Custom | Braswell 9/11 (Power 2) | 1A |

Date: Tuesday, January 24, 2017 Sheet 10 of 35

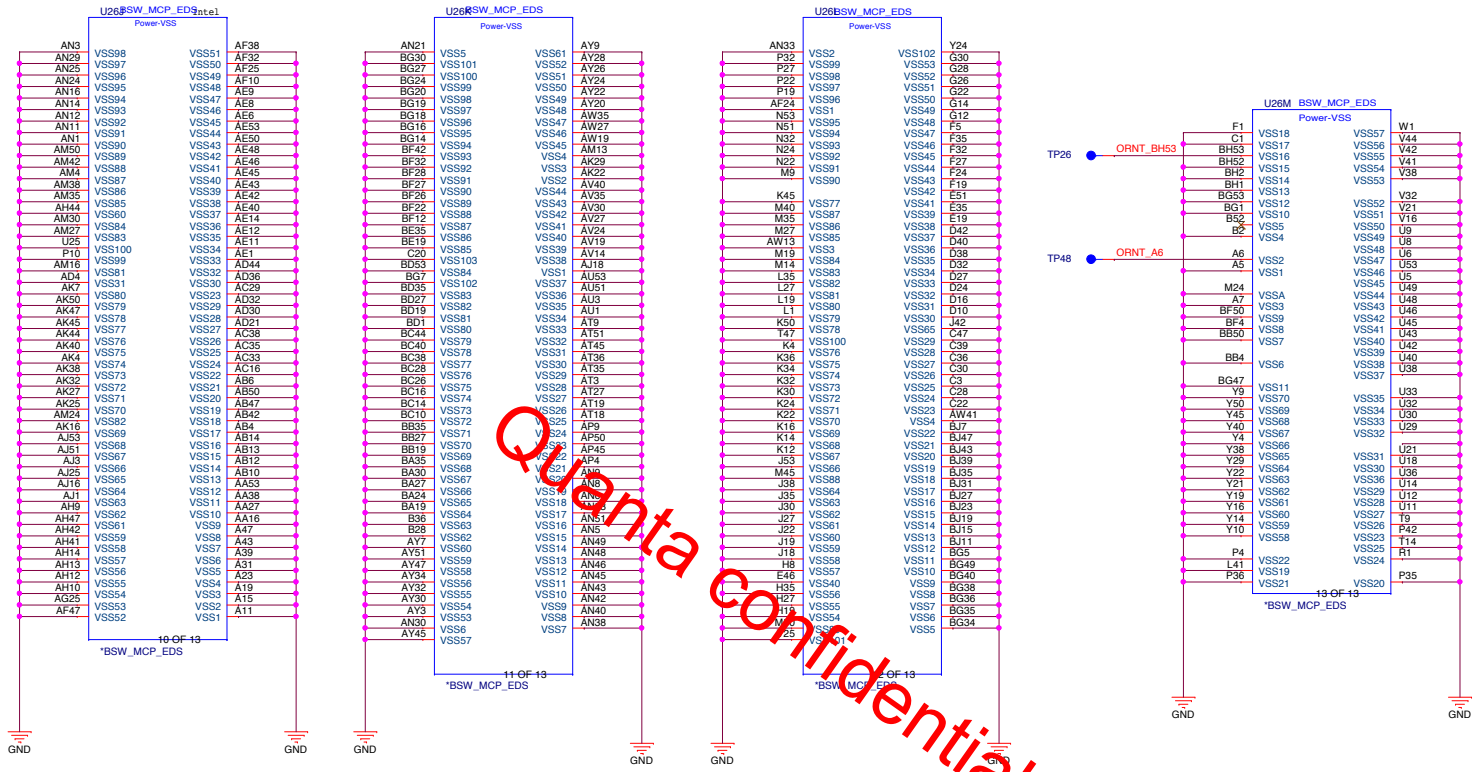


Quanta Confidential

**PROJECT : G72D**

Quanta Computer Inc.

| Size | Document Number | Rev |
|---|---|---|
| Custom | Braswell 10/11 (GND) | 1A |

Date: Tuesday, January 24, 2017 | Sheet 11 of 35

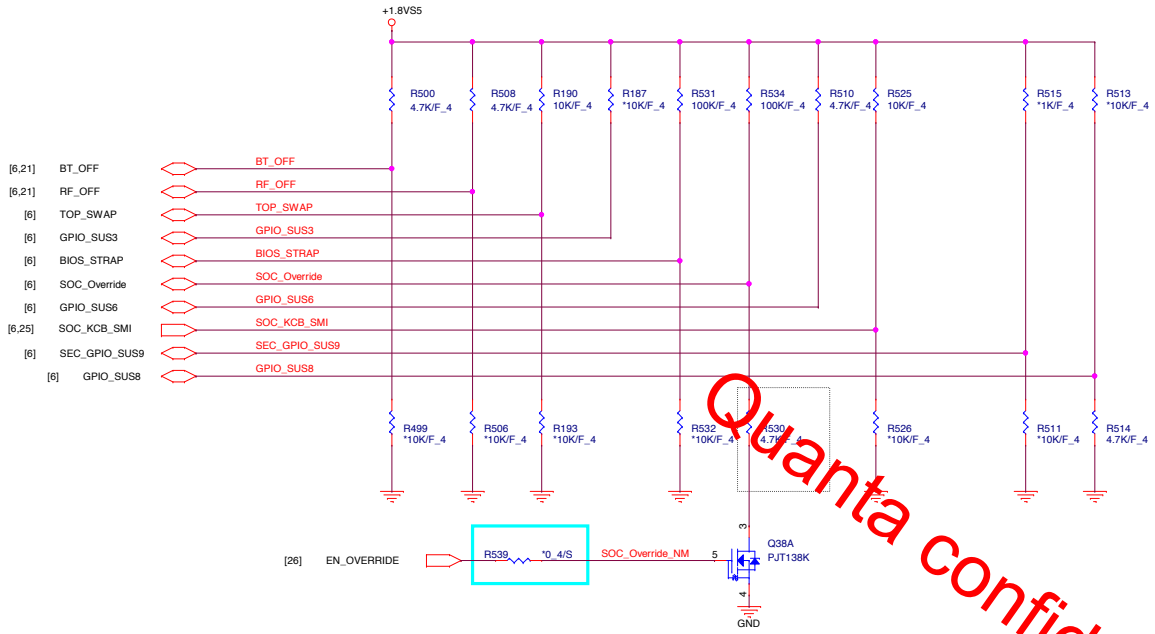


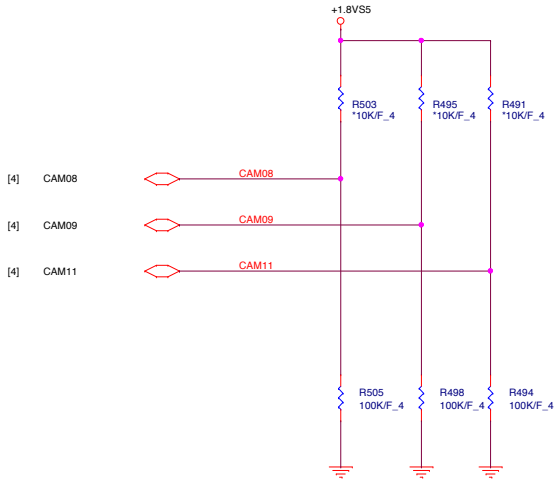


Quanta confidential

## REQUIRED STRAPS

| | GPIO_SUS0 | GPIO_SUS1 | TOP_SWAP | GPIO_SUS3 | BIOS_STRAP | SOC_Override | GPIO_SUS6 | SOC_KCB_SMI | GPIO_SUS8 |
|---|---|---|---|---|---|---|---|---|---|
| PULL HIGH | DDI0 detected<br>DEFAULT | DDI1 detected<br>DEFAULT | Normal Operation<br>DEFAULT | Reserve 10 KΩ PU<br>DEFAULT | SPI<br>DEFAULT | Normal Operation<br>DEFAULT<br>20150209 PV change | 10 KΩ PU to 1.8V<br>DEFAULT | Reserve 10 KΩ PU<br>DEFAULT | Supply is 1.35V |
| PULL LOW | DDI0 not detected | DDI1 not detected | Change Boot Loader address | | LPC | Override | | | Supply is 1.25V<br>DEFAULT |

| | CAM08 | CAM09 | CAM11 |
|---|---|---|---|
| PULL HIGH | ICLK Xtal OSC Bypass | CCU SUS RO Bypass | RTC OSC Bypass |
| PULL LOW | ICLK Xtal OSC No Bypass<br>DEFAULT | CCU SUS RO No Bypass<br>DEFAULT | RTC OSC No Bypass<br>DEFAULT |

**PROJECT : G72D**
Quanta Computer Inc.

| Size | Document Number | Rev |
|---|---|---|
| Custom | Braswell 11/11 (Strap) | 1A |

Date: Tuesday, January 24, 2017 Sheet 12 of 35

Quanta confidential

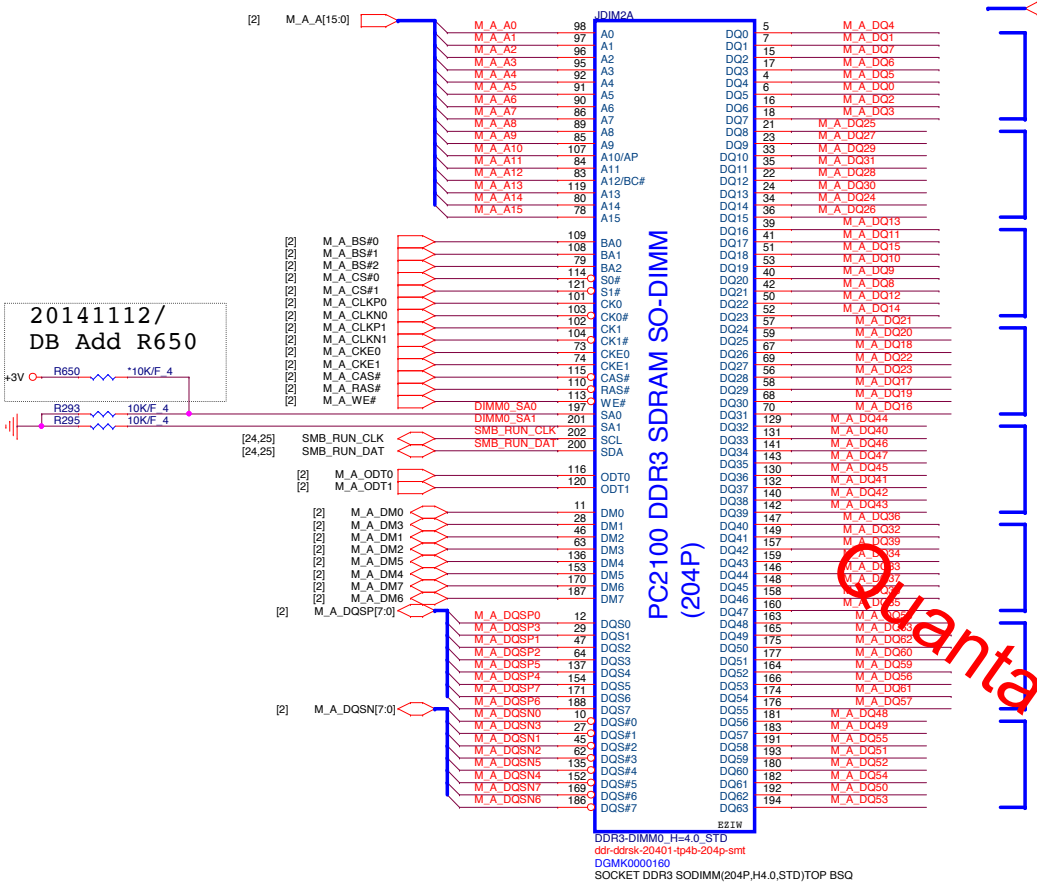


20141112/
DB Add R650

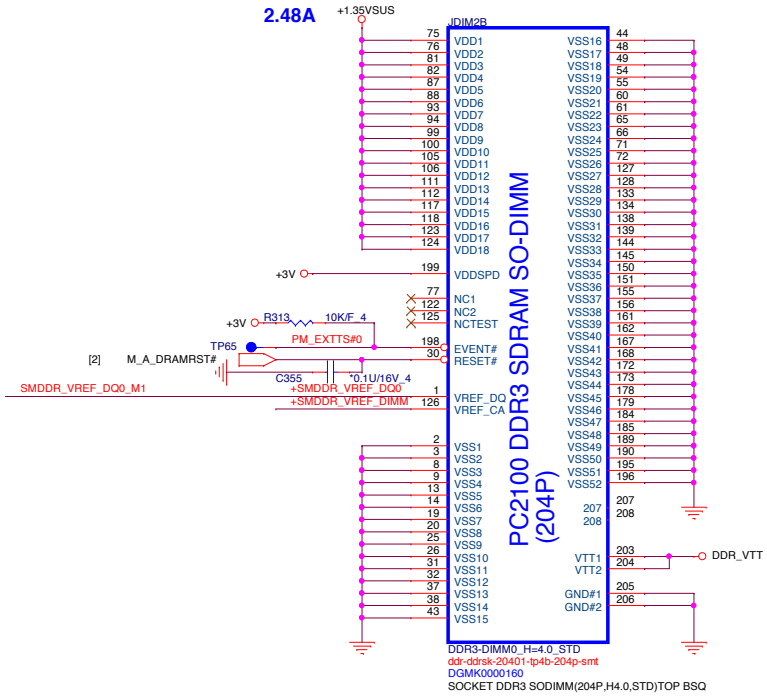


Quanta confidential

## Local Thermal Sensor

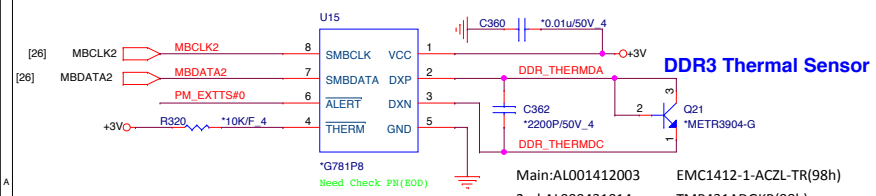


## DDR3 Thermal Sensor

Main:AL001412003 EMC1412-1-ACZL-TR(98h)
2nd:AL000431014 TMP431ADGKR(98h)

## Place these Caps near So-Dimm0.

1uF/10uF 4pcs on each side of connector

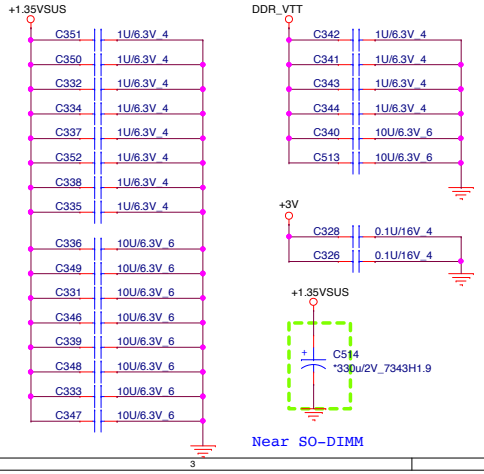


Near SO-DIMM

## VREF DQ0 M1 Solution

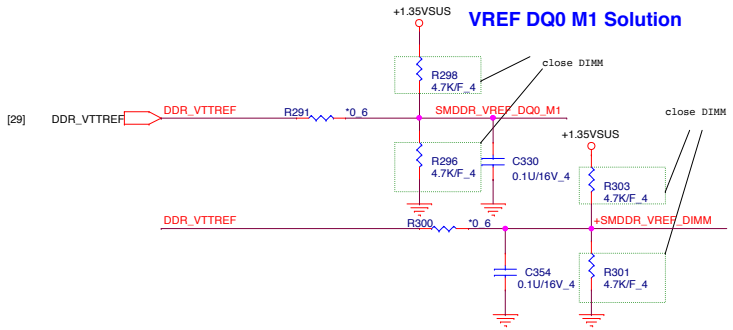


| | | |
|---|---|---|
| PROJECT : G72D<br>Quanta Computer Inc. | | |
| Size<br>Custom | Document Number<br>DDR3 DIMM0-STD(4.0H) | Rev<br>1A |
| Date: Tuesday, January 24, 2017 | Sheet 14 of 35 | |

# LID Switch

R4501 can't change to shortpad

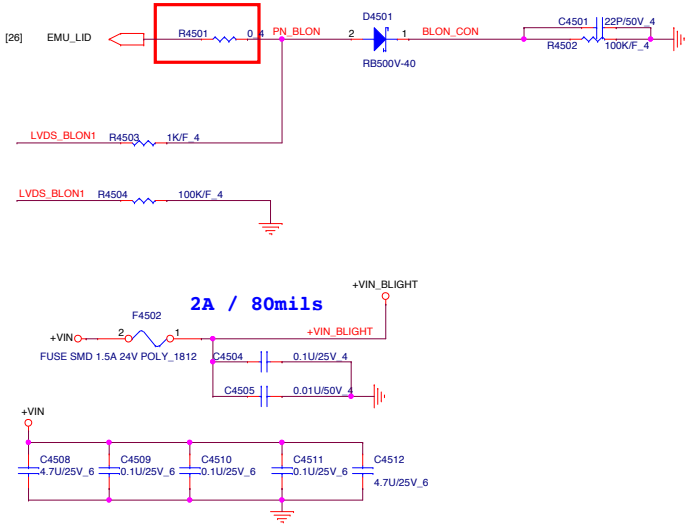


# Touch screen

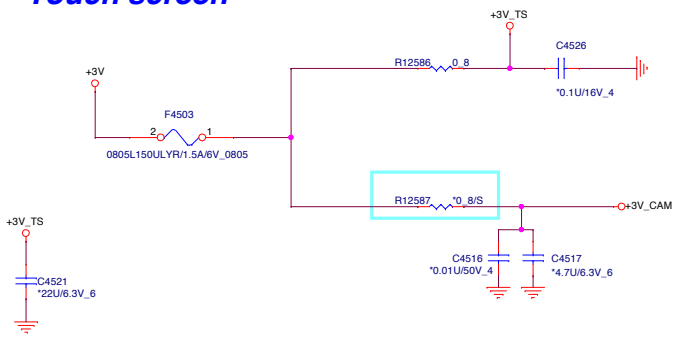


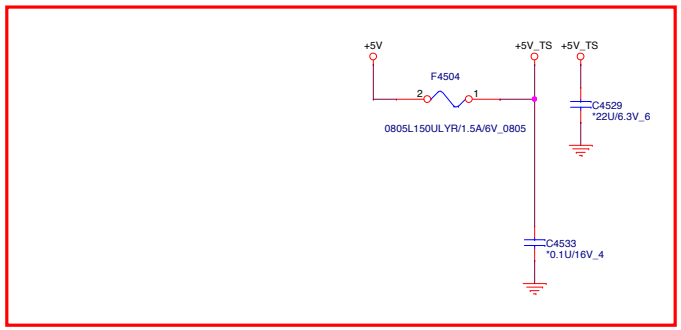


# eDP Conn.

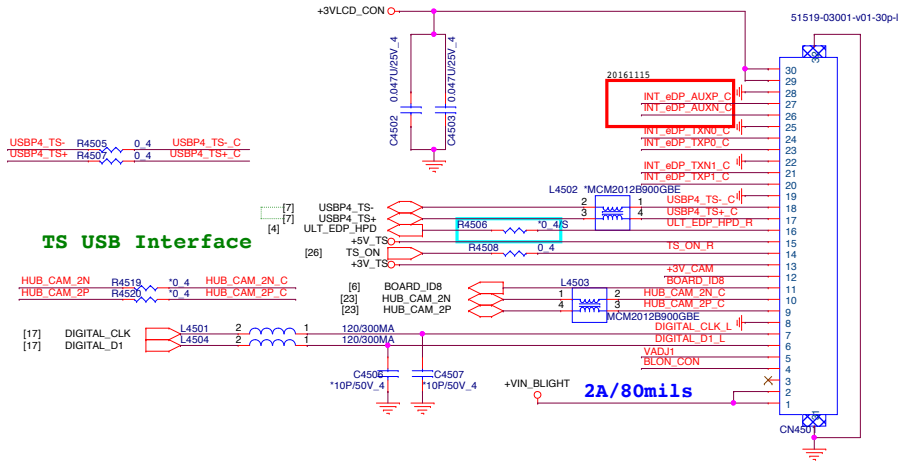


20161018 FP/PN check ok

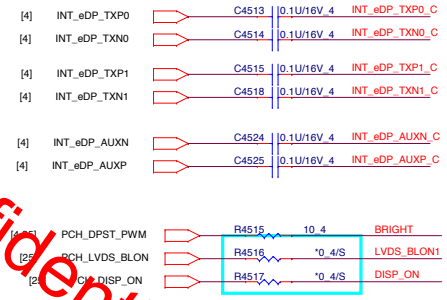


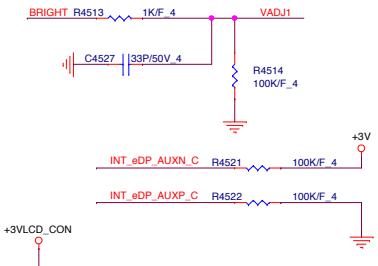


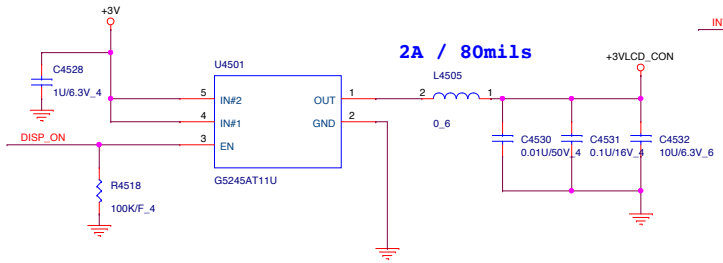


Quanta confidential

**PROJECT : G72D**
Quanta Computer Inc.

| Size | Document Number | Rev |
|---|---|---|
| Custom | eDP CONN/LID/CAM/D-MIC/TS | 1A |

Date: Tuesday, January 24, 2017 Sheet 15 of 35

20161018 FP/PN check ok

## HDMI SMBus isolation

Close to HDMI connector

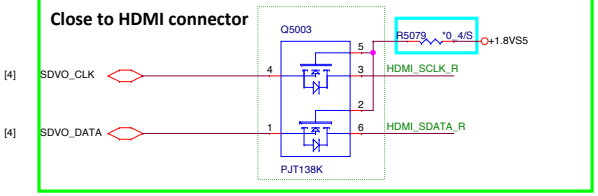


## For From CPU use

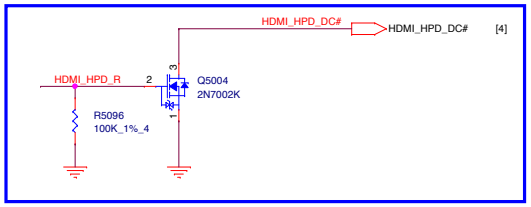


## HDMI ESD

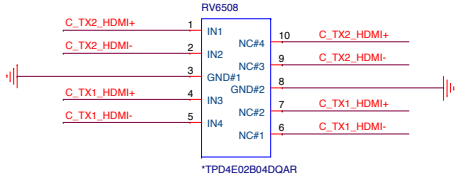


## HDMI ESD

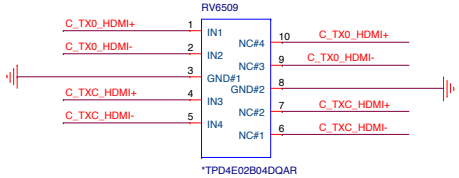


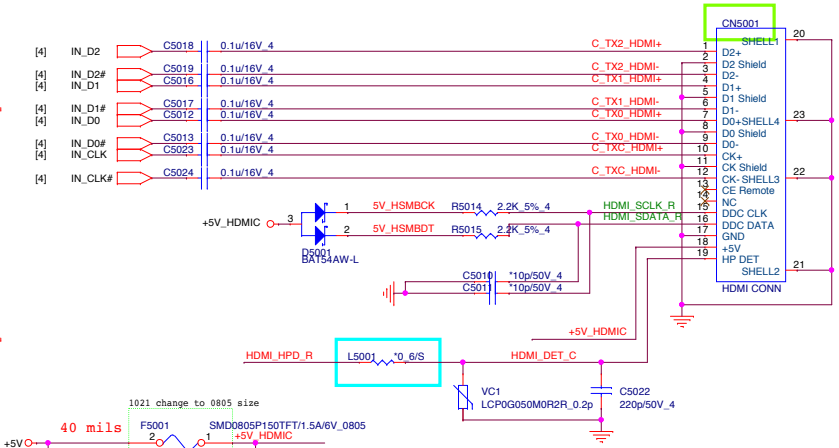


## Intel EMI Solution

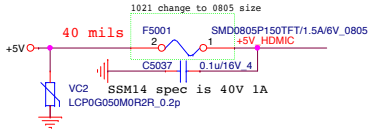


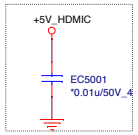


for EMI request

Close to HDMI connector

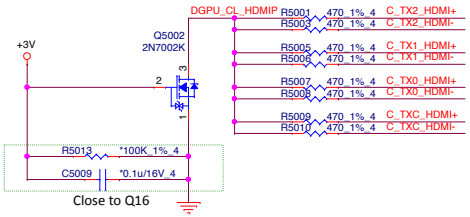


Quanta confidential

## HOLE

CPU BKT

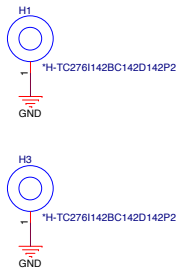


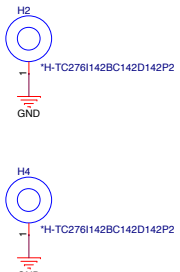


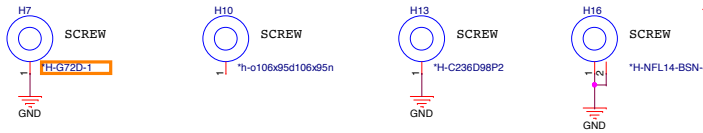

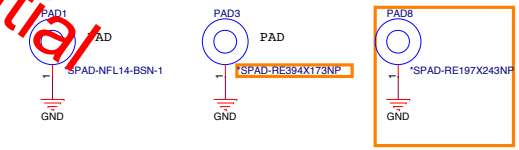


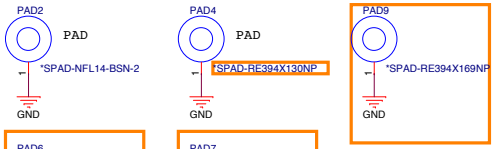


VGA NUT

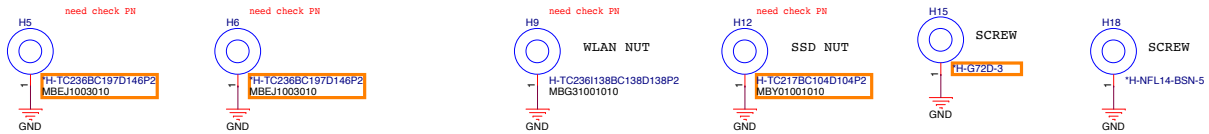


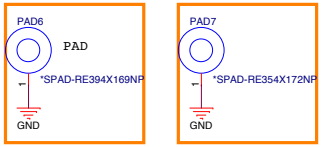


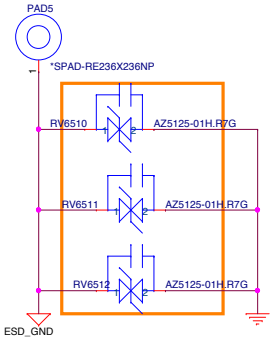


**PROJECT : G72D**

Quanta Computer Inc.

| Size | Document Number | Rev |
|---|---|---|
| Custom | HDMI/CONN | 1A |

Date: Wednesday, January 25, 2017 Sheet 16 of 35

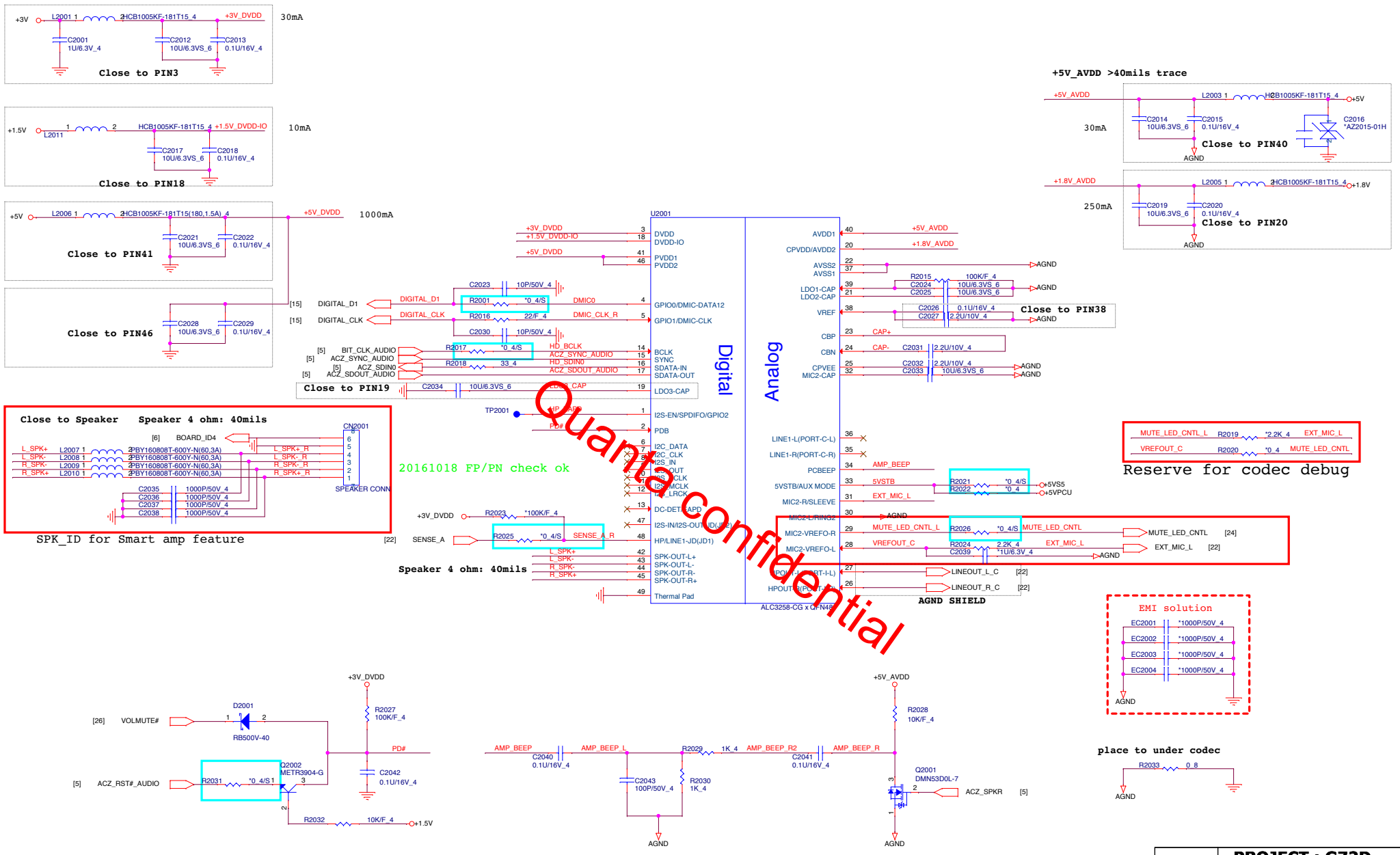
+3V
L2001 1
2 HCB1005KF-181T15_4
+3V_DVDD
30mA
C2001 1U/6.3V_4
C2012 10U/6.3VS_6
C2013 0.1U/16V_4
Close to PIN3
+1.5V
L2011
HCB1005KF-181T15_4
+1.5V_DVDD-IO
10mA
C2017 10U/6.3VS_6
C2018 0.1U/16V_4
Close to PIN18
+5V
L2006 1
2 HCB1005KF-181T15(180,1.5A) 4
+5V_DVDD
1000mA
C2021 10U/6.3VS_6
C2022 0.1U/16V_4
Close to PIN41
C2028 10U/6.3VS_6
C2029 0.1U/16V_4
Close to PIN46
+5V_AVDD >40mils trace
+5V_AVDD
L2003 1
2 HCB1005KF-181T15_4
+5V
30mA
C2014 10U/6.3VS_6
C2015 0.1U/16V_4
C2016 *AZ2015-01H
Close to PIN40
AGND
+1.8V_AVDD
L2005 1
2 HCB1005KF-181T15_4
+1.8V
250mA
C2019 10U/6.3VS_6
C2020 0.1U/16V_4
Close to PIN20
AGND
U2001
Digital
Analog
DVDD
DVDD-IO
PVDD1
PVDD2
GPIO0/DMIC-DATA12
GPIO1/DMIC-CLK
BCLK
SYNC
SDATA-IN
SDATA-OUT
LDO3-CAP
I2S-EN/SPDIFO/GPIO2
PDB
I2C_DATA
I2C_CLK
I2S_IN
I2S_OUT
I2S_BCLK
I2S_MCLK
I2S_LRCK
DC-DET/CAPD
I2S-IN/I2S-OUT/JD(JD2)
HP/LINE1-JD(JD1)
SPK-OUT-L+
SPK-OUT-L-
SPK-OUT-R-
SPK-OUT-R+
Thermal Pad
AVDD1
CPVDD/AVDD2
AVSS2
AVSS1
LDO1-CAP
LDO2-CAP
VREF
CBP
CBN
CPVEE
MIC2-CAP
LINE1-L(PORT-C-L)
LINE1-R(PORT-C-R)
PCBEEP
5VSTB/AUX MODE
MIC2-R/SLEEVE
MIC2-L/RING2
MIC2-VREFO-R
MIC2-VREFO-L
LINEOUT_L_C
LINEOUT_R_C
ALC3258-CG x QFN48
AGND SHIELD
DIGITAL_D1
DIGITAL_CLK
BIT_CLK_AUDIO
ACZ_SYNC_AUDIO
ACZ_SDIN0
ACZ_SDOUT_AUDIO
Close to PIN19
TP2001
Close to Speaker
Speaker 4 ohm: 40mils
BOARD_ID4
CN2001
SPEAKER CONN
L_SPK+
L_SPK-
R_SPK-
R_SPK+
SPK_ID for Smart amp feature
20161018 FP/PN check ok
SENSE_A
Speaker 4 ohm: 40mils
Close to PIN38
MUTE_LED_CNTL_L
VREFOUT_C
EXT_MIC_L
MUTE_LED_CNTL
Reserve for codec debug
EMI solution
EC2001
EC2002
EC2003
EC2004
AGND
VOLMUTE#
D2001
RB500V-40
R2027 100K/F_4
PD#
ACZ_RST#_AUDIO
Q2002 METR3904-G
R2031 *0_4/S1
C2042 0.1U/16V_4
R2032 10K/F_4
+1.5V
+3V_DVDD
+5V_AVDD
R2028 10K/F_4
AMP_BEEP
AMP_BEEP_L
AMP_BEEP_R2
AMP_BEEP_R
C2040 0.1U/16V_4
C2041 0.1U/16V_4
R2029 1K_4
C2043 100P/50V_4
R2030 1K_4
Q2001 DMN53D0L-7
ACZ_SPKR
place to under codec
R2033 0_8
Quanta Confidential
PROJECT : G72D
Quanta Computer Inc.
Size Custom
Document Number
Codec ALC3258-CG
Rev 1A
Date: Tuesday, January 24, 2017
Sheet 17 of 35

# LAN RTL8166EH/RTL8111HSH

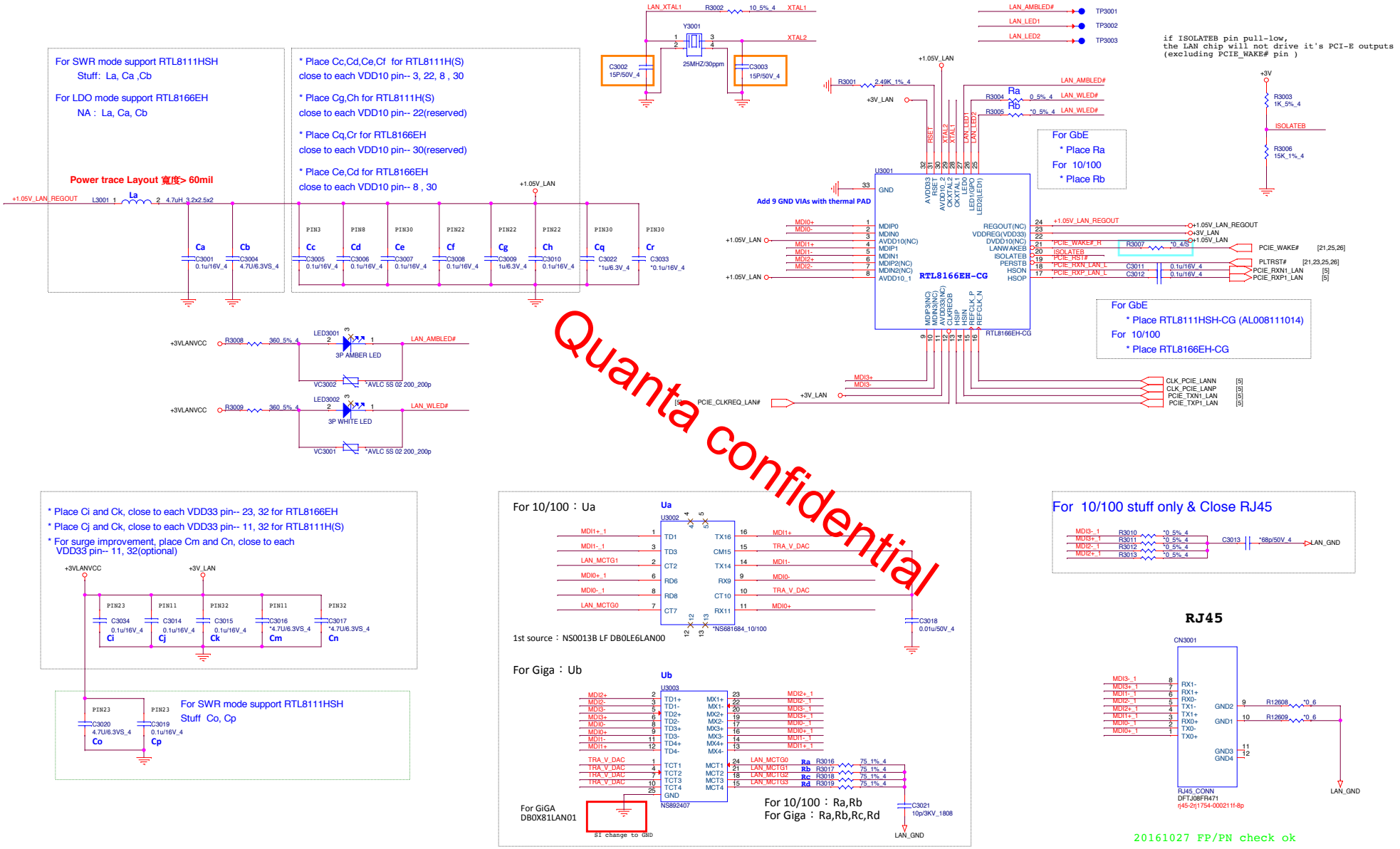


Quanta confidential

**PROJECT : G72D**
Quanta Computer Inc.

| Size | Document Number | Rev |
|---|---|---|
| C | LAN RTL8166EH/RTL8111HSH | 1A |

Date: Tuesday, January 24, 2017 Sheet 18 of 35

# USB TYPE-C - TPS25810



## USB2.0

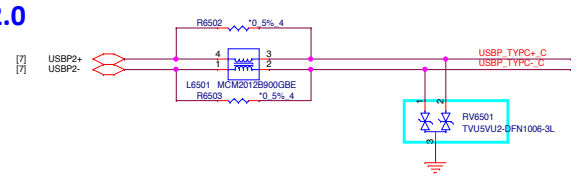


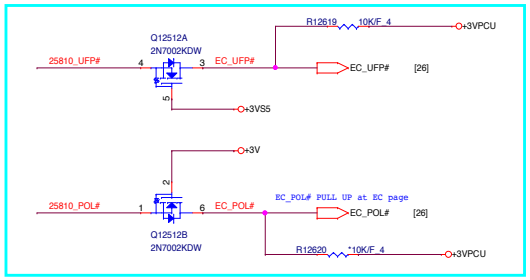


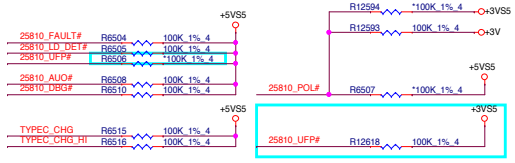


| CHG | CHG_HI | CC Capability Broadcast | Current Limit | Load Detect Threshold |
|---|---|---|---|---|
| 0 | 0 | STD | 1.67 A | NA |
| 0 | 1 | STD | 1.67 A | NA |
| 1 | 0 | 1.5 A | 1.67 A | NA |
| 1 | 1 | 3.0 A | 3.34 A | 1.77 A |

**PV add To judge the usb typeC port for factory**

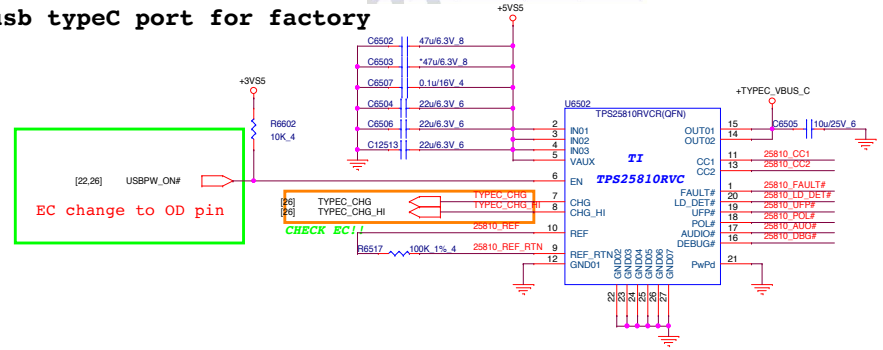


## USB Type-C re driver

### to Type C SW

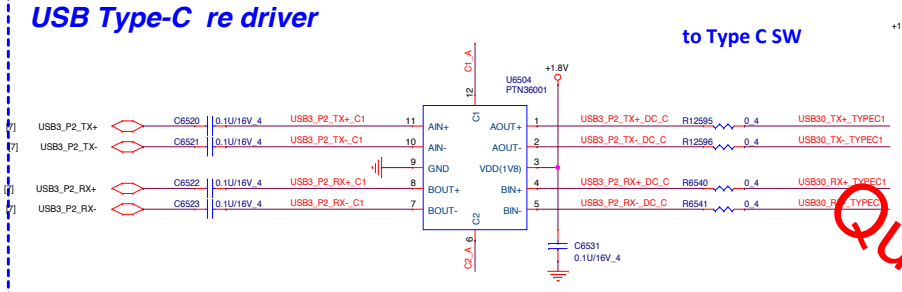


Table 4. C1 pin controls long/medium/short traces

| State | Channel type | Pin C1 state | Channel B | Channel A | |
|---|---|---|---|---|---|
| | | | EQ[1] | DE[2] | OS[3] |
| H | Long | H | 9 dB | –5.3 dB | 1.1 V |
| high-Z | Medium | high-Z | 6 dB | –3.1 dB | 1.0 V |
| L | Short | L | 3 dB | 0 dB | 0.9 V |

Table 5. C2 pin controls long/medium/short traces

| State | Channel type | Pin C2 state | Channel A | Channel B | |
|---|---|---|---|---|---|
| | | | EQ[1] | DE[2] | OS[3] |
| H | Long | H | 9 dB | –5.3 dB | 1.1 V |
| high-Z | Medium | high-Z | 6 dB | –3.1 dB | 1.0 V |
| L | Short | L | 3 dB | 0 dB | 0.9 V |

Quanta confidential

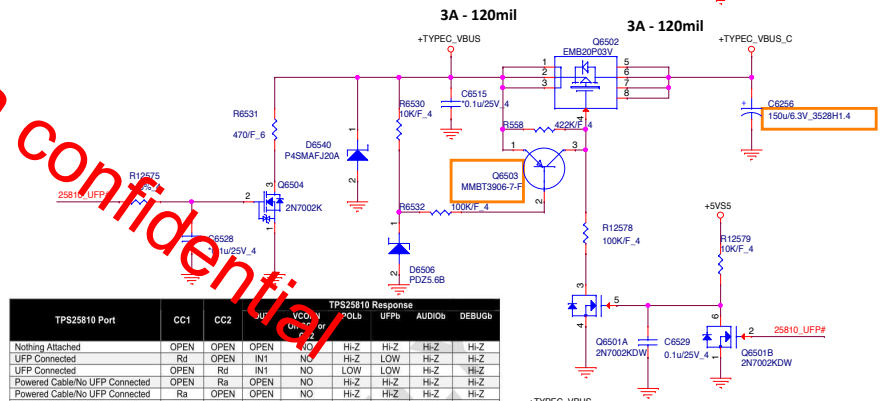


| TPS25810 Port | CC1 | CC2 | VCONN Over Voltage | POLb | UFPb | AUDIOb | DEBUGb |
|---|---|---|---|---|---|---|---|
| | TPS25810 Response | | | | | | |
| Nothing Attached | OPEN | OPEN | OPEN | NO | Hi-Z | Hi-Z | Hi-Z |
| UFP Connected | Rd | OPEN | IN1 | NO | Hi-Z | LOW | Hi-Z | Hi-Z |
| UFP Connected | OPEN | Rd | IN1 | NO | LOW | LOW | Hi-Z | Hi-Z |
| Powered Cable/No UFP Connected | OPEN | Ra | OPEN | NO | Hi-Z | Hi-Z | Hi-Z | Hi-Z |
| Powered Cable/No UFP Connected | Ra | OPEN | OPEN | NO | Hi-Z | Hi-Z | Hi-Z | Hi-Z |
| Powered Cable/UFP Connected | Rd | Ra | IN1 | CC2 | Hi-Z | LOW | Hi-Z | Hi-Z |
| Powered Cable/UFP Connected | Ra | Rd | IN1 | CC1 | LOW | LOW | Hi-Z | Hi-Z |
| Debug Accessory Connected | Rd | Rd | OPEN | NO | Hi-Z | Hi-Z | Hi-Z | LOW |
| Audio Adapter Accessory Connected | Ra | Ra | OPEN | NO | Hi-Z | Hi-Z | LOW | Hi-Z |

## USB SWITCH

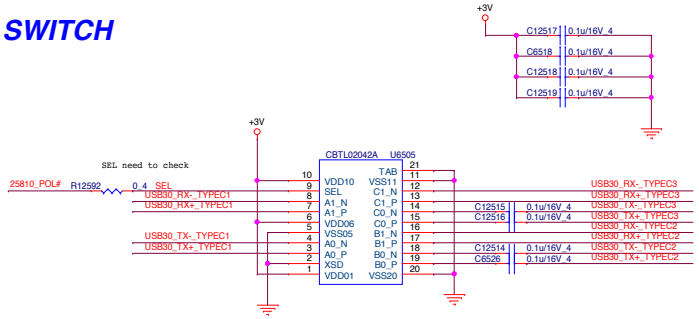


**SEL = CMOS single-ended input operation mode select**
**SEL = LOW: A <---> B**
**SEL = HIGH: A <---> C**

## TYPE C USB3.0 ESD

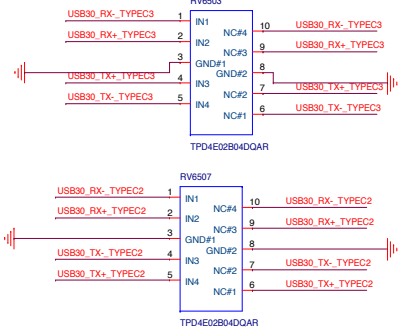


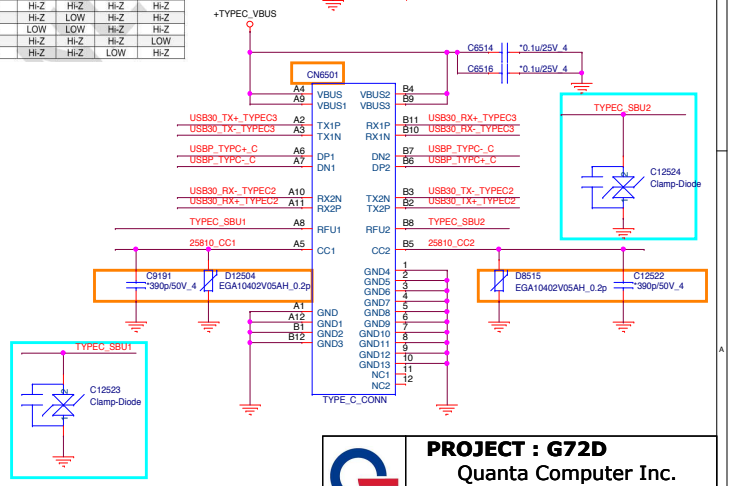


**PROJECT : G72D**
Quanta Computer Inc.

| Size | Document Number | Rev |
|---|---|---|
| | TYPE-C+TPS25810 | 1A |

Date: Wednesday, January 25, 2017 | Sheet 19of 35

# HDD

## SATA HDD

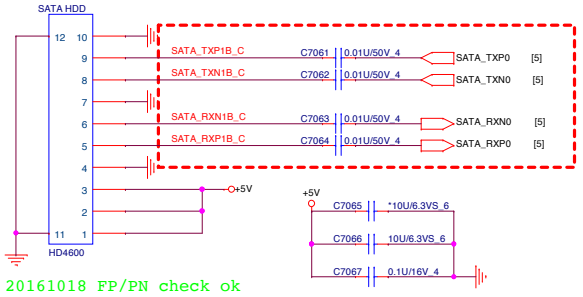


20161018 FP/PN check ok

## SATA LED

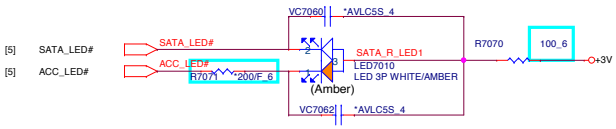


# eMMC

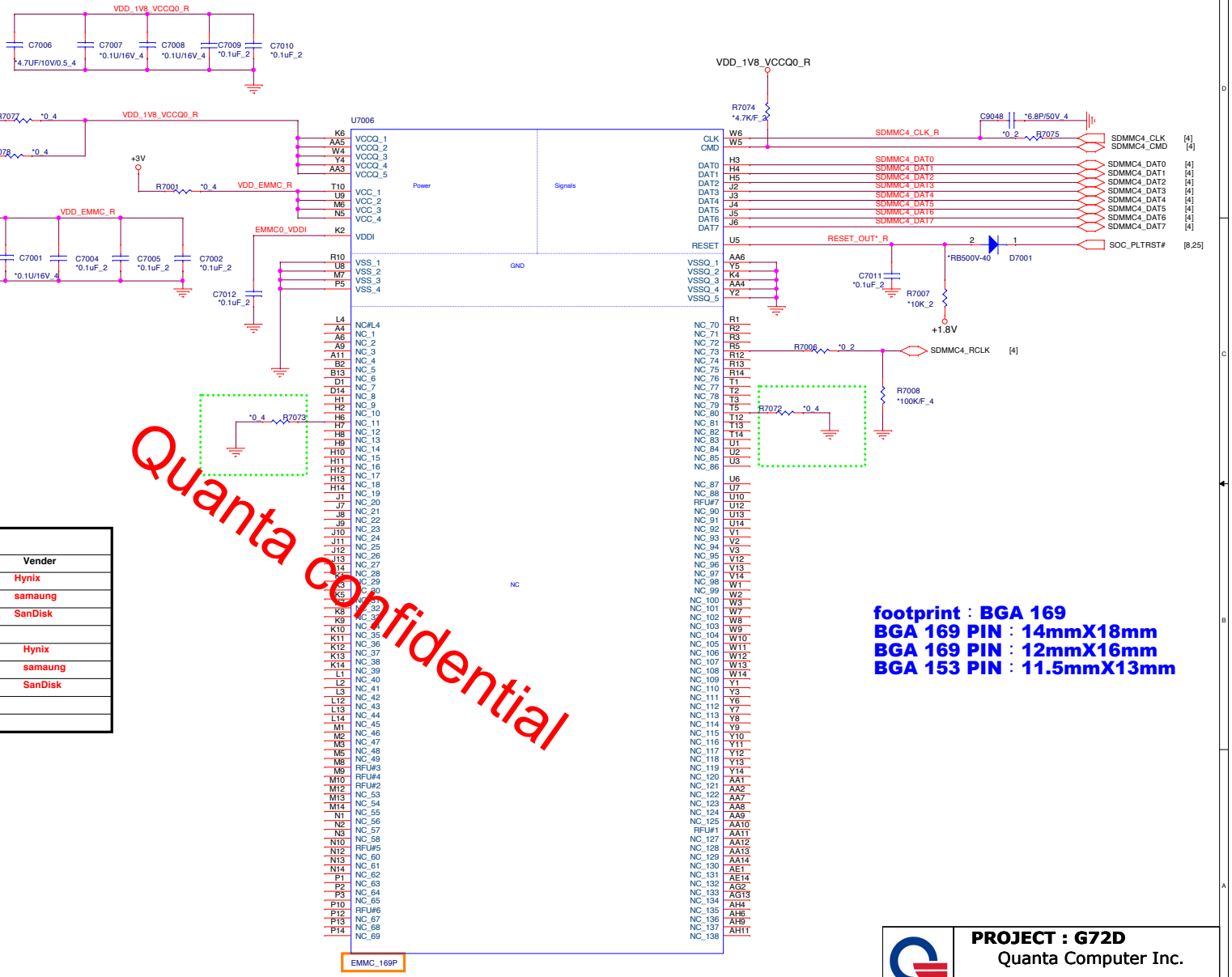


Quanta Confidential

**footprint : BGA 169**
**BGA 169 PIN : 14mmX18mm**
**BGA 169 PIN : 12mmX16mm**
**BGA 153 PIN : 11.5mmX13mm**

iNAND (eMMC) V4.51

| TOPBSQ | QBCON | Description | SIZE | Vender |
|---|---|---|---|---|
| AKE3SZ-TW01 | AKE3SZ-TW02 | IC FLASH(153P)H26M64103EMR(FBGA) | 32G | Hynix |
| AKE5SZ0T511 | AKE5SZ0T512 | IC FLASH(153)KLMBG4GEND-B031(FBGA) | 32G | samaung |
| AKE3SFUT000 | AKE3SFUT001 | IC FLASH(153P)SDIN9DW4-32G(FBGA) | 32G | SanDisk |
| | | | | |
| AKE3TG-TW01 | AKE3TG-TW02 | IC FLASH(153P)H26M78103CCR(FBGA) | 64G | Hynix |
| AKE3TZPT521 | AKE3TZPT520 | IC FLASH(153)KLMCG8GEND-B031(FBGA) | 64G | samaung |
| AKE3TFUT101 | AKE3TFUT102 | IC FLASH(153P)SDIN9DW4-64G(FBGA) | 64G | SanDisk |
| | | | | |
| | | | | |

**PROJECT : G72D**
Quanta Computer Inc.

| Size | Document Number | Rev |
|---|---|---|
| Custom | HDD/EMMC | 1A |

Date: Wednesday, January 25, 2017 Sheet 20 of 35

# SATA SSD

20161018 FP/PN check ok

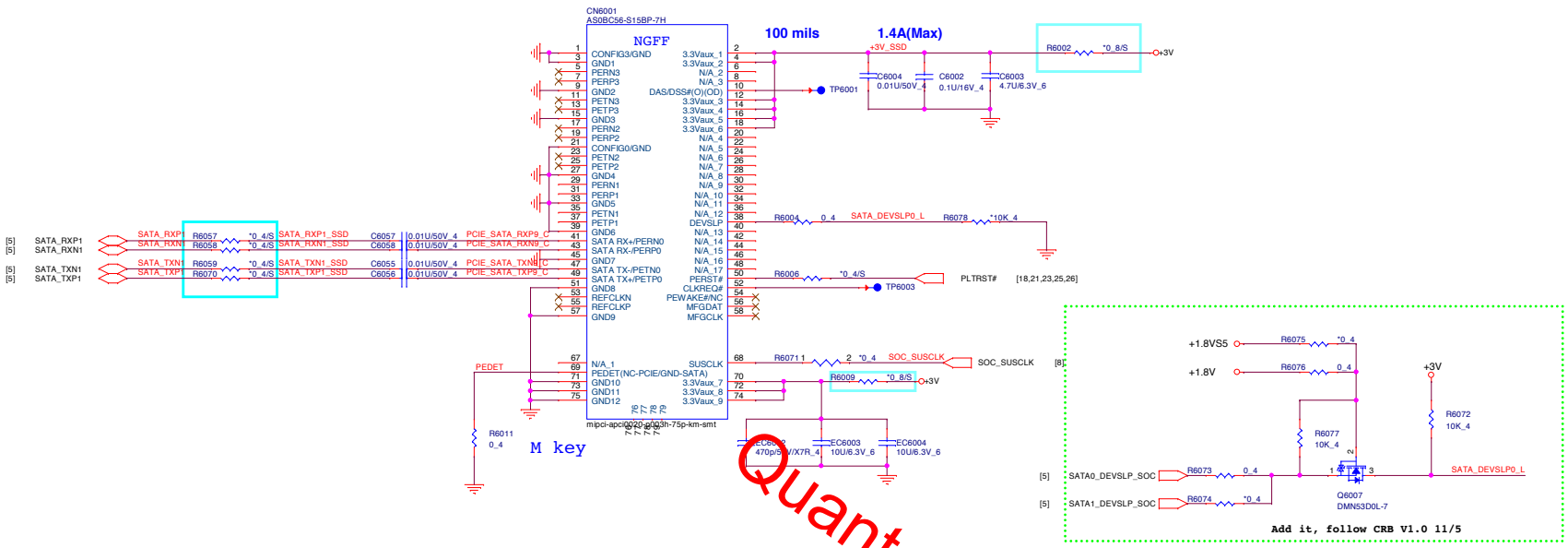


# WLAN

Mini Card
WLAN/BT(Option)

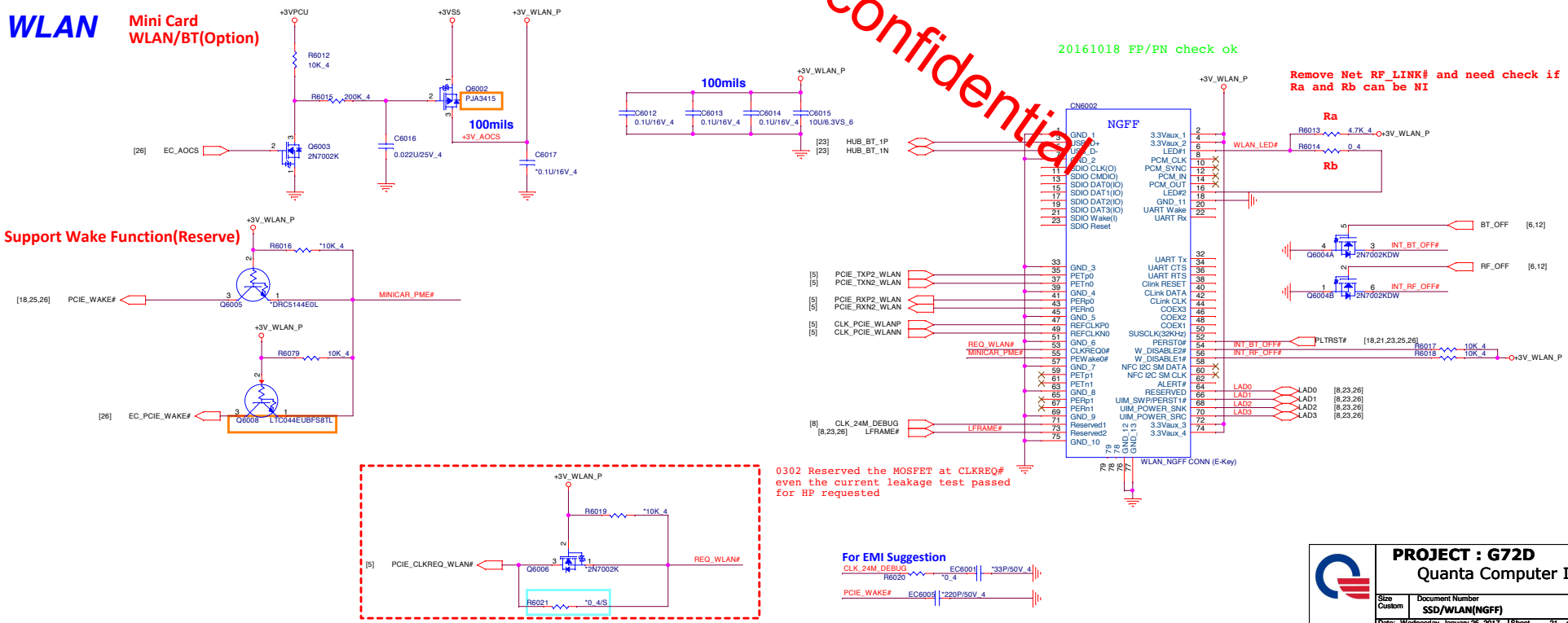


Quanta confidential

PROJECT : G72D
Quanta Computer Inc.

| Size | Document Number | Rev |
|---|---|---|
| Custom | SSD/WLAN(NGFF) | 1A |

Date: Wednesday, January 25, 2017 | Sheet 21 of 35

# Power Botton Connector

20161018 FP/PN check ok

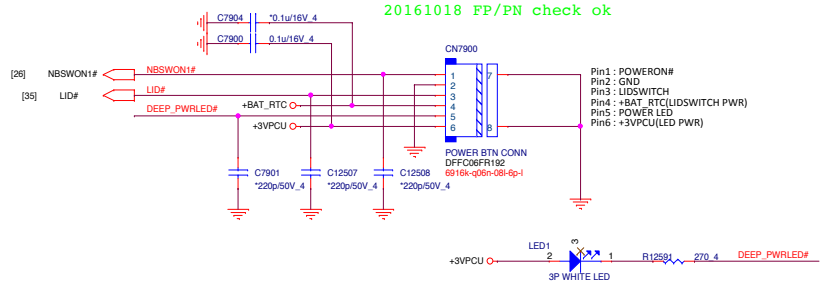


# UART for Win7 WHQL DEBUG

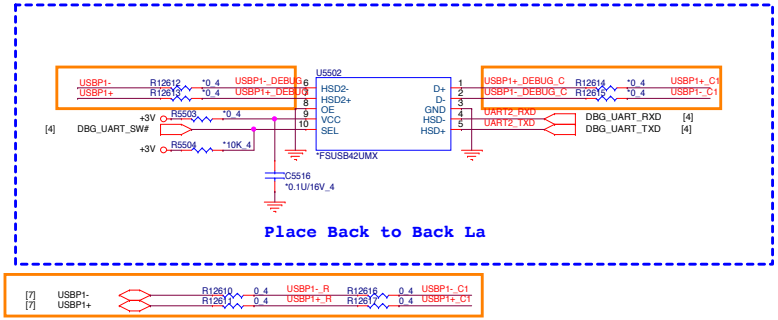


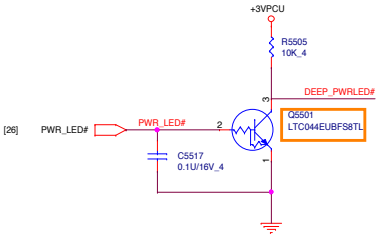


Quanta confidential

20161026 FP/PN check ok

# Daughter Board

For Audio layout routing

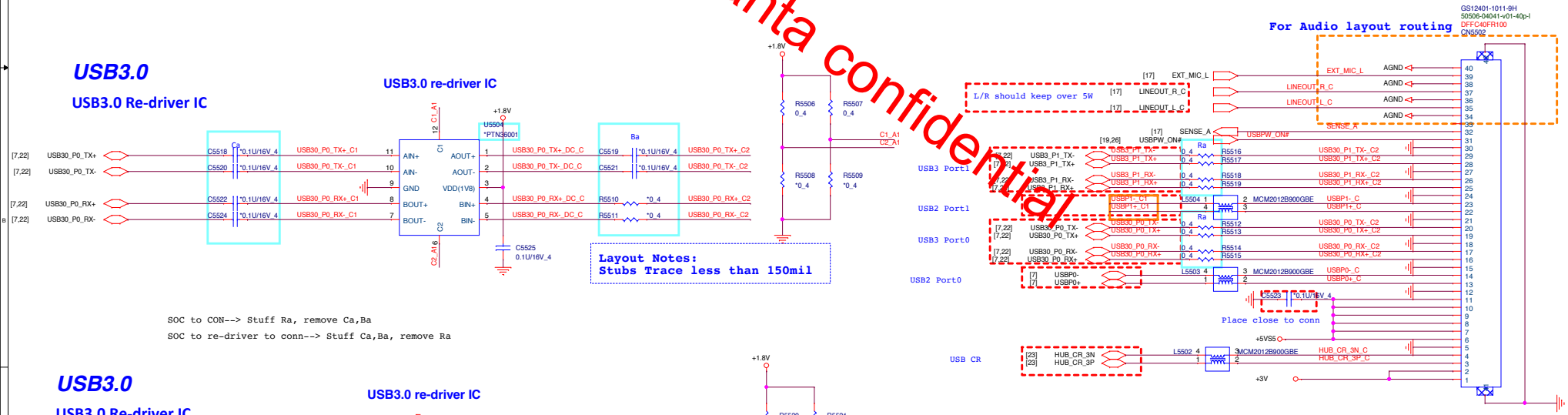


# USB3.0

## USB3.0 Re-driver IC

### USB3.0 re-driver IC




Layout Notes:
Stubs Trace less than 150mil

SOC to CON--> Stuff Ra, remove Ca,Ba

SOC to re-driver to conn--> Stuff Ca,Ba, remove Ra

# USB3.0

## USB3.0 Re-driver IC

### USB3.0 re-driver IC

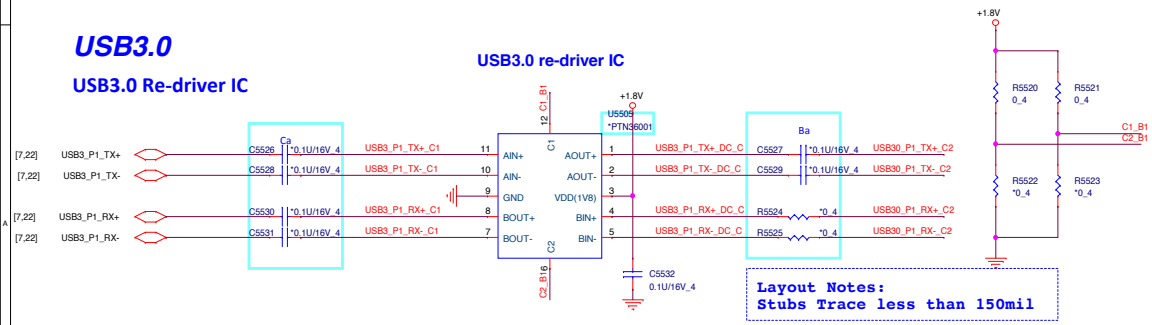


Layout Notes:
Stubs Trace less than 150mil

| | | |
|---|---|---|
| PROJECT : G72D<br>Quanta Computer Inc. | | |
| Size<br>C | Document Number<br>USB3.0/DB | Rev<br>1A |
| Date: Wednesday, January 25, 2017 | Sheet 22 of 35 | |

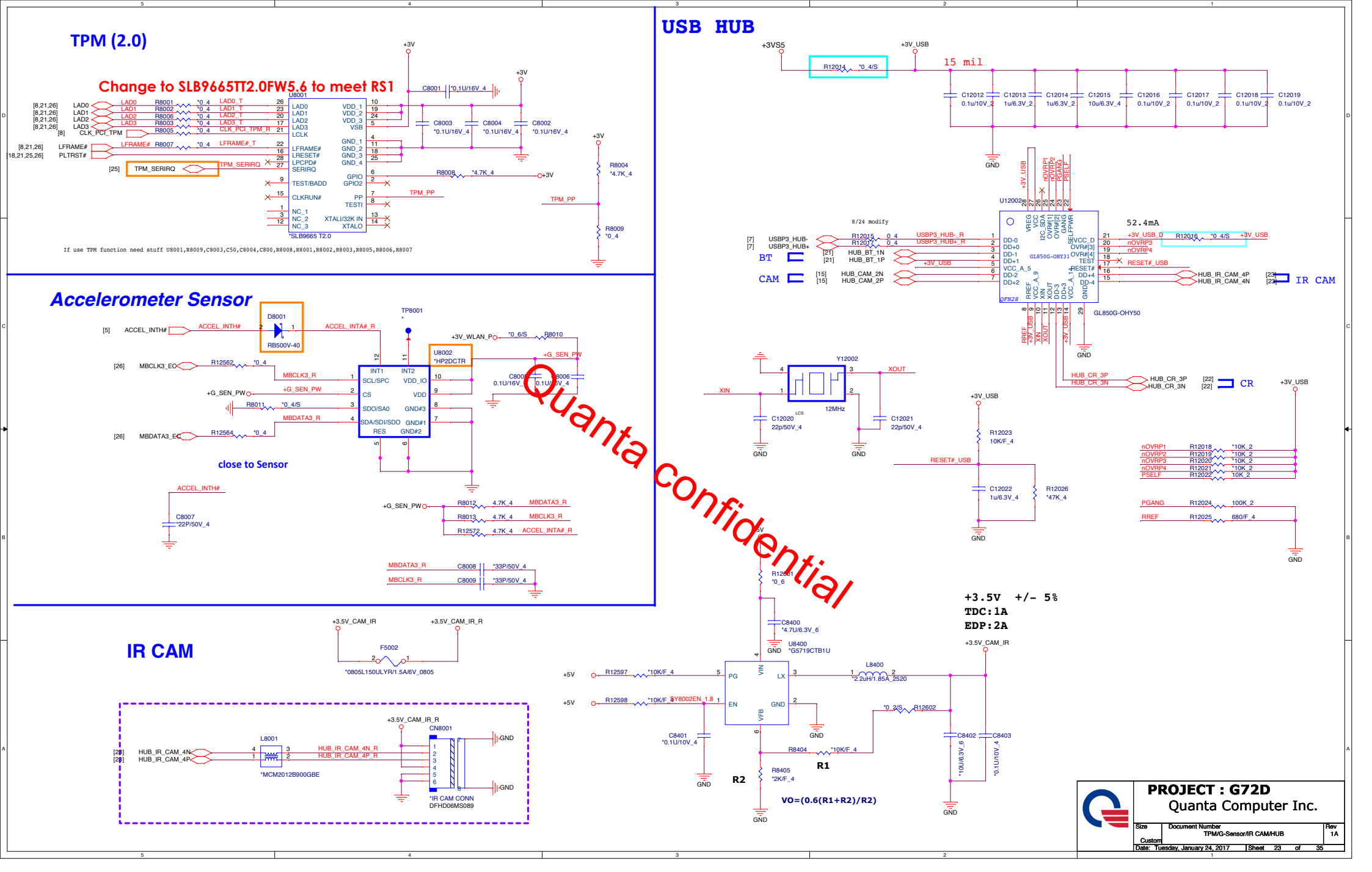
TPM (2.0)
Change to SLB9665TT2.0FW5.6 to meet RS1
U8001
*SLB9665 T2.0
If use TPM function need stuff U8001,R8009,C8003,C50,C8004,C800,R8008,R8001,R8002,R8003,R8005,R8006,R8007
USB HUB
15 mil
U12002
GL850G-OHY31
GL850G-OHY50
52.4mA
8/24 modify
BT
CAM
IR CAM
CR
Y12002
12MHz
Accelerometer Sensor
D8001
RB500V-40
U8002
*HP2DCTR
close to Sensor
Quanta confidential
+3.5V +/- 5%
TDC:1A
EDP:2A
U8400
*G5719CTB1U
SY8002EN_1.8
VO=(0.6(R1+R2)/R2)
R1
R2
IR CAM
F5002
*0805L150ULYR/1.5A/6V_0805
L8001
*MCM2012B900GBE
CN8001
*IR CAM CONN
DFHD06MS089
PROJECT : G72D
Quanta Computer Inc.
Size
Custom
Document Number
TPM/G-Sensor/IR CAM/HUB
Rev
1A
Date: Tuesday, January 24, 2017
Sheet 23 of 35

# KEYBOARD Con.

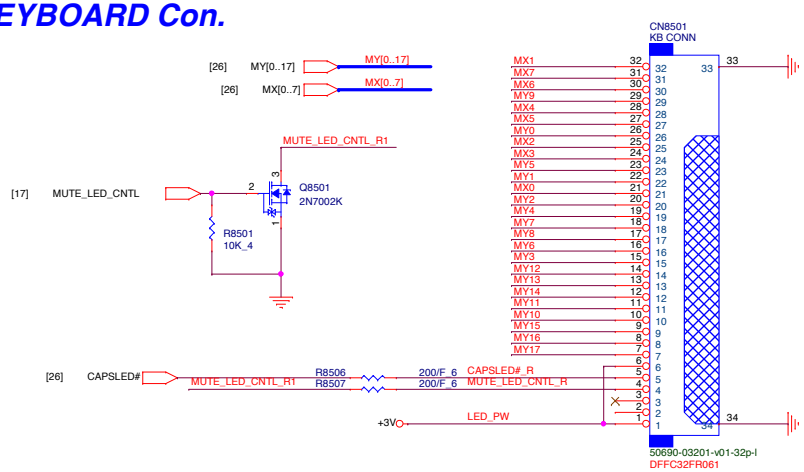


## KEYBOARD PULL-UP

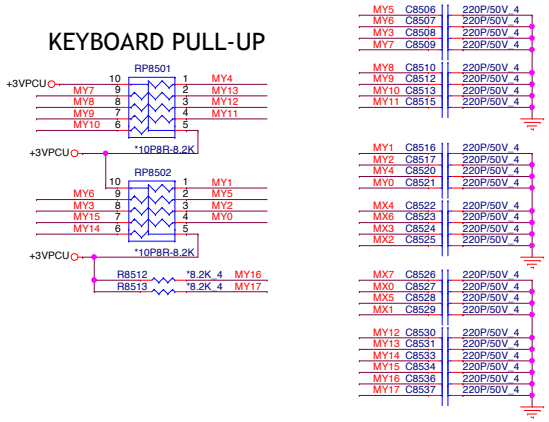


# KB LIGHT CONN

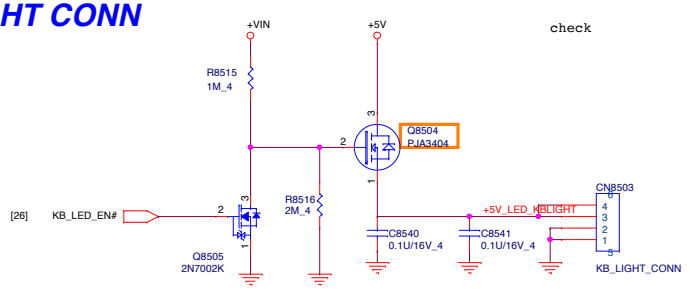


# Touch Pad Connector

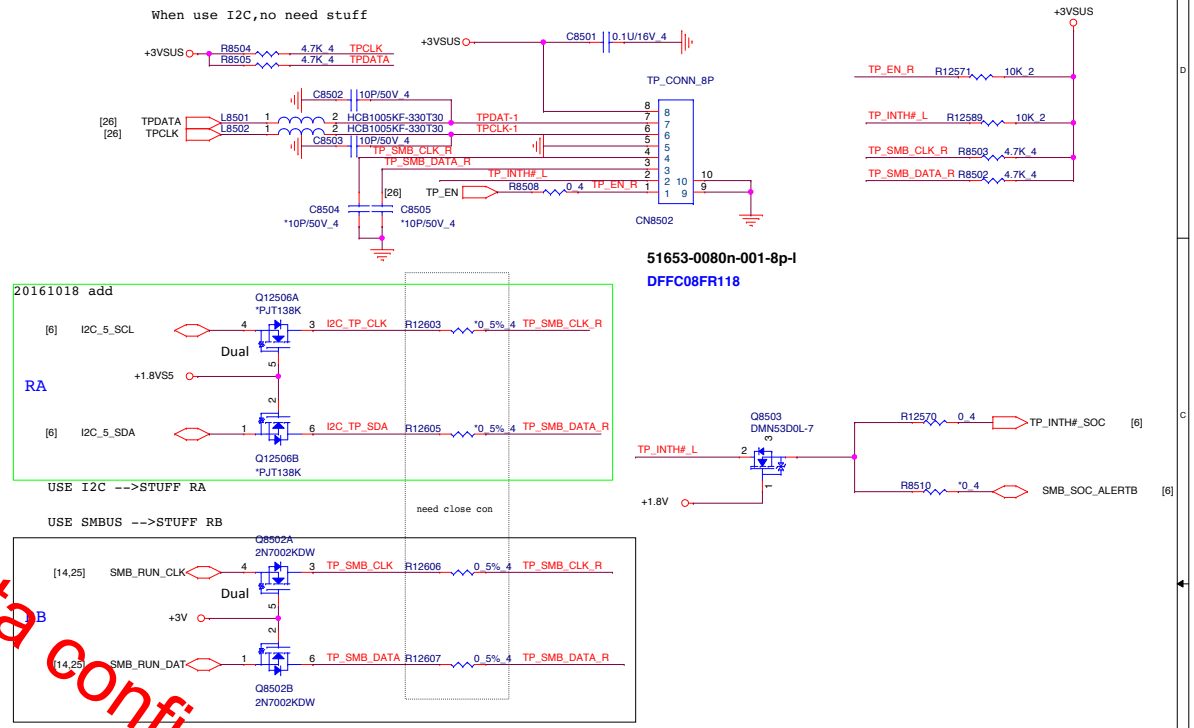


# Cap

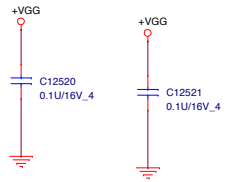


Quanta Confidential

**PROJECT : G72D**
Quanta Computer Inc.

| Size | Document Number | Rev |
|---|---|---|
| Custom | KB/TP/FAN | 1A |

Date: Wednesday, January 25, 2017 | Sheet 24 of 35

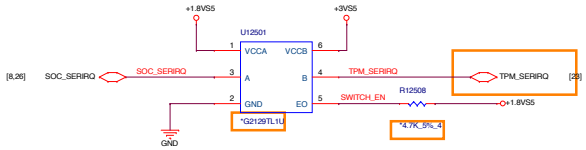


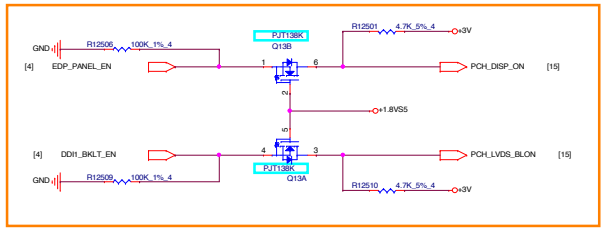


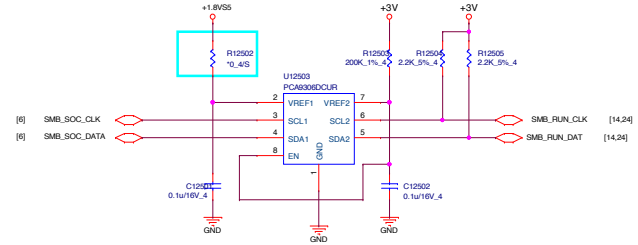


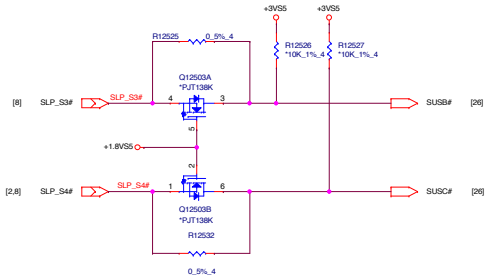


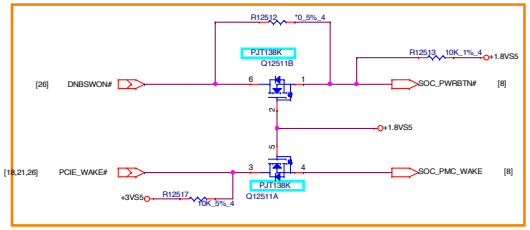


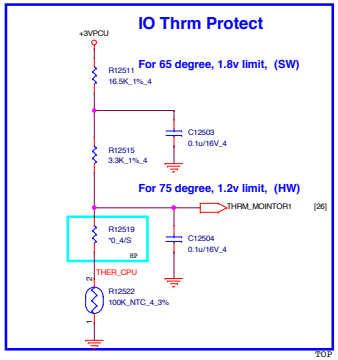


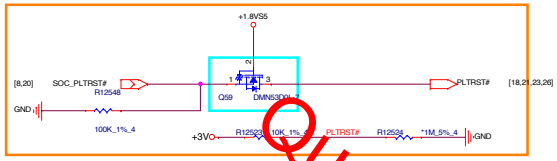


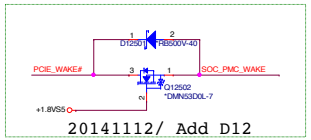


20141112/ Add D12

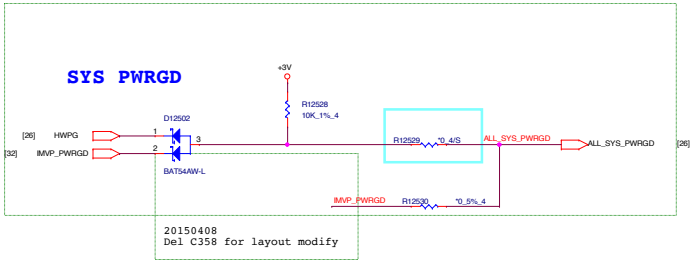


20150408
Del C358 for layout modify

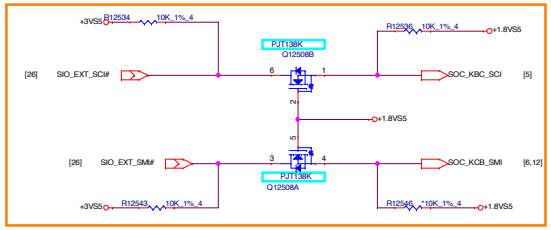


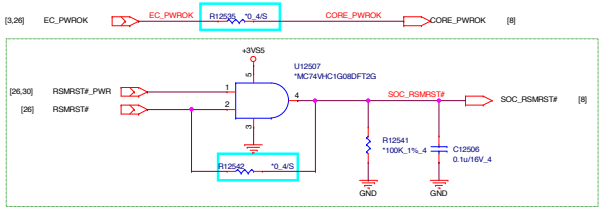


11/5 Add AND gate

Quanta confidential

| | | |
|---|---|---|
| PROJECT : G72D<br>Quanta Computer Inc. | | |
| Size | Document Number<br>Level shift/Thermistor | Rev<br>1A |
| Date: Wednesday, January 25, 2017 | Sheet 25 of 35 | |

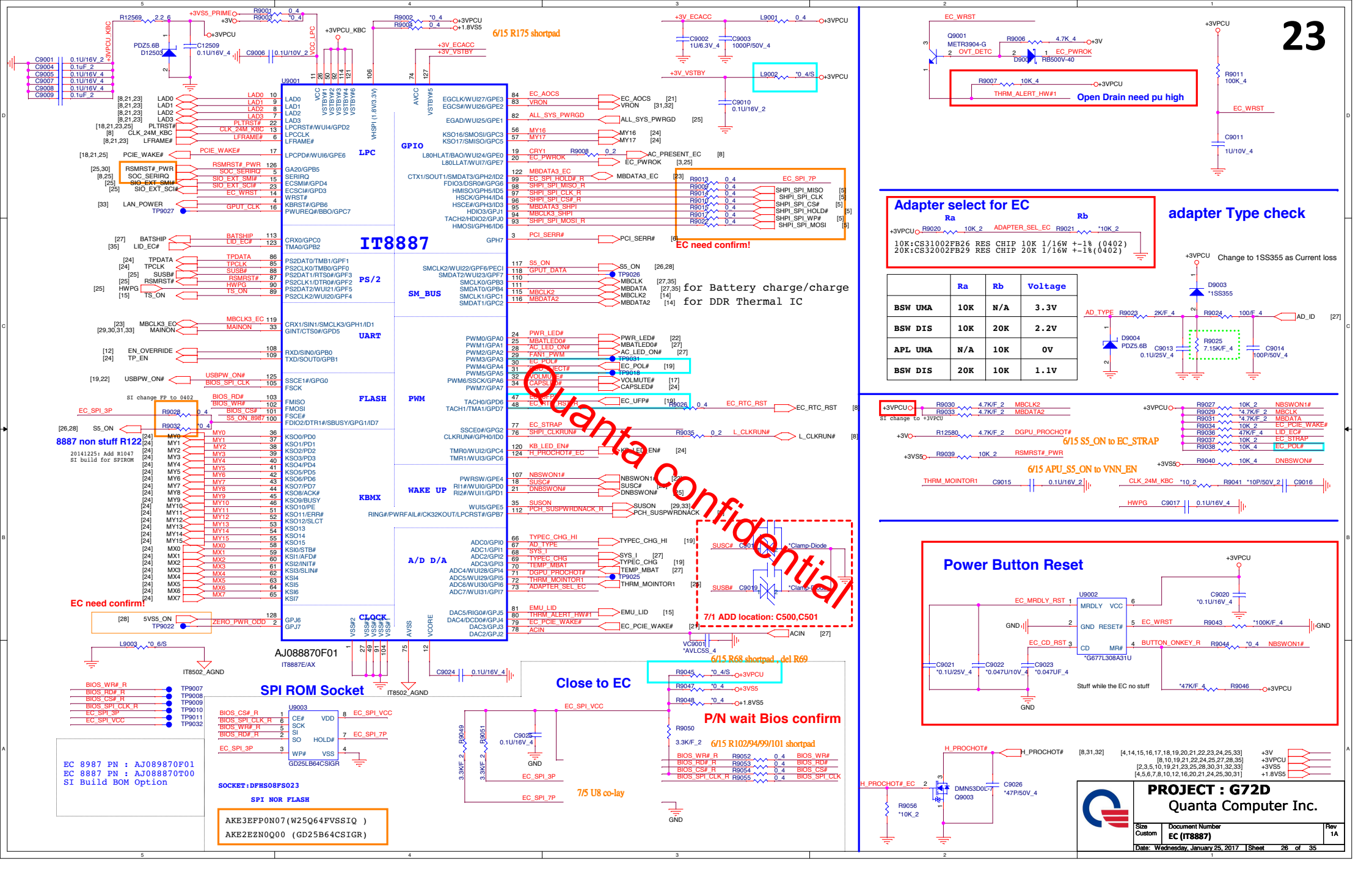


| | Ra | Rb | Voltage |
|---|---|---|---|
| BSW UMA | 10K | N/A | 3.3V |
| BSW DIS | 10K | 20K | 2.2V |
| APL UMA | N/A | 10K | 0V |
| BSW DIS | 20K | 10K | 1.1V |

+3VPCU [8,10,19,21,22,24,25,26,27,28,35]
+5VPCU [17,28,30,33]
+BAT_RTC [8,22,35]
+VIN [15,24,28,29,30,31,32,34]
+3VPCU [8,10,19,21,22,24,25,26,27,28,35]

**ADP=65W**

**3S1P 41Whr**

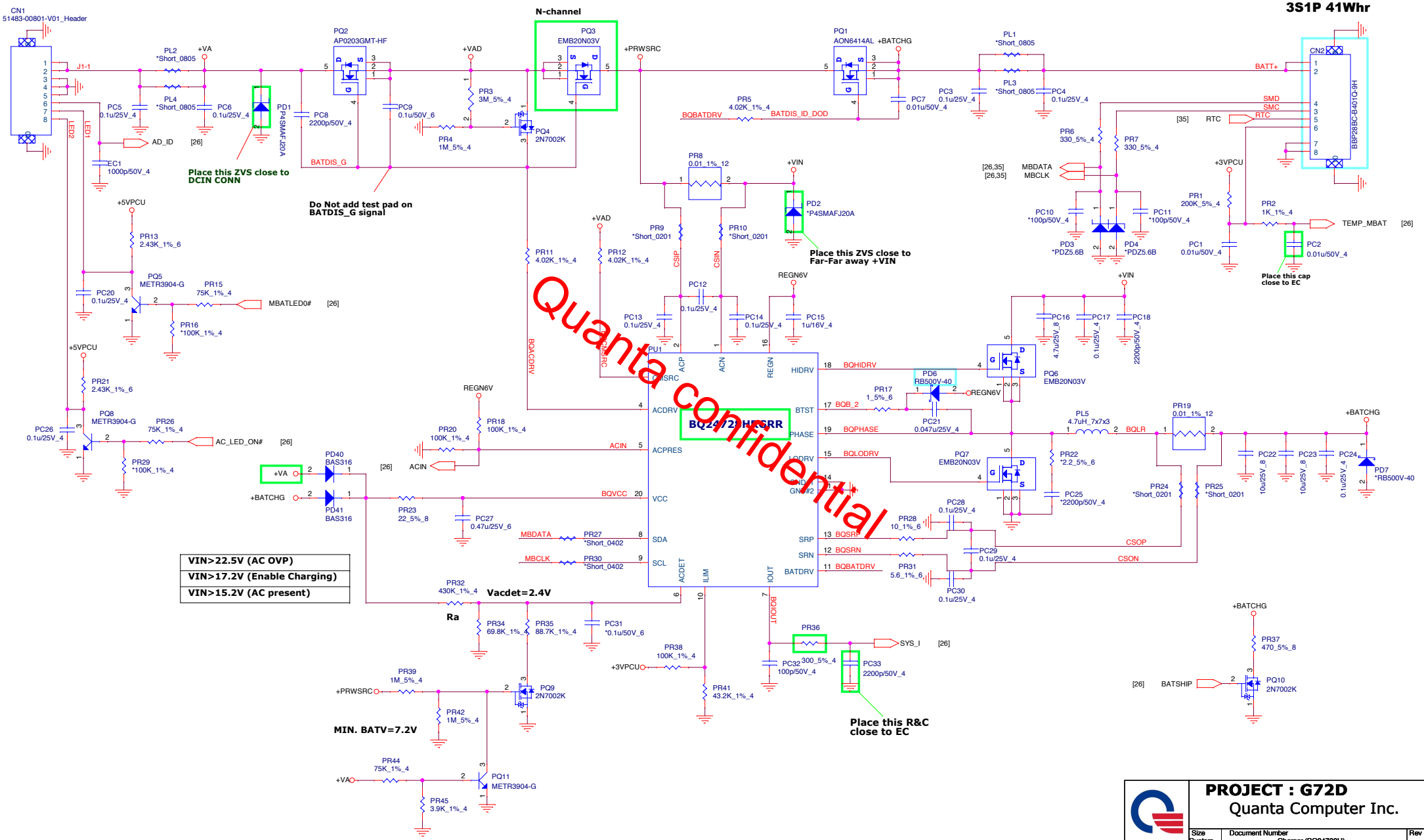


PROJECT : G72D
Quanta Computer Inc.

| Size | Document Number | Rev |
|---|---|---|
| Custom | Charger (BQ24738H) | 1A |

Date: Wednesday, January 25, 2017 | Sheet 27 of 35

# DC/DC +3VS5/+5VS5



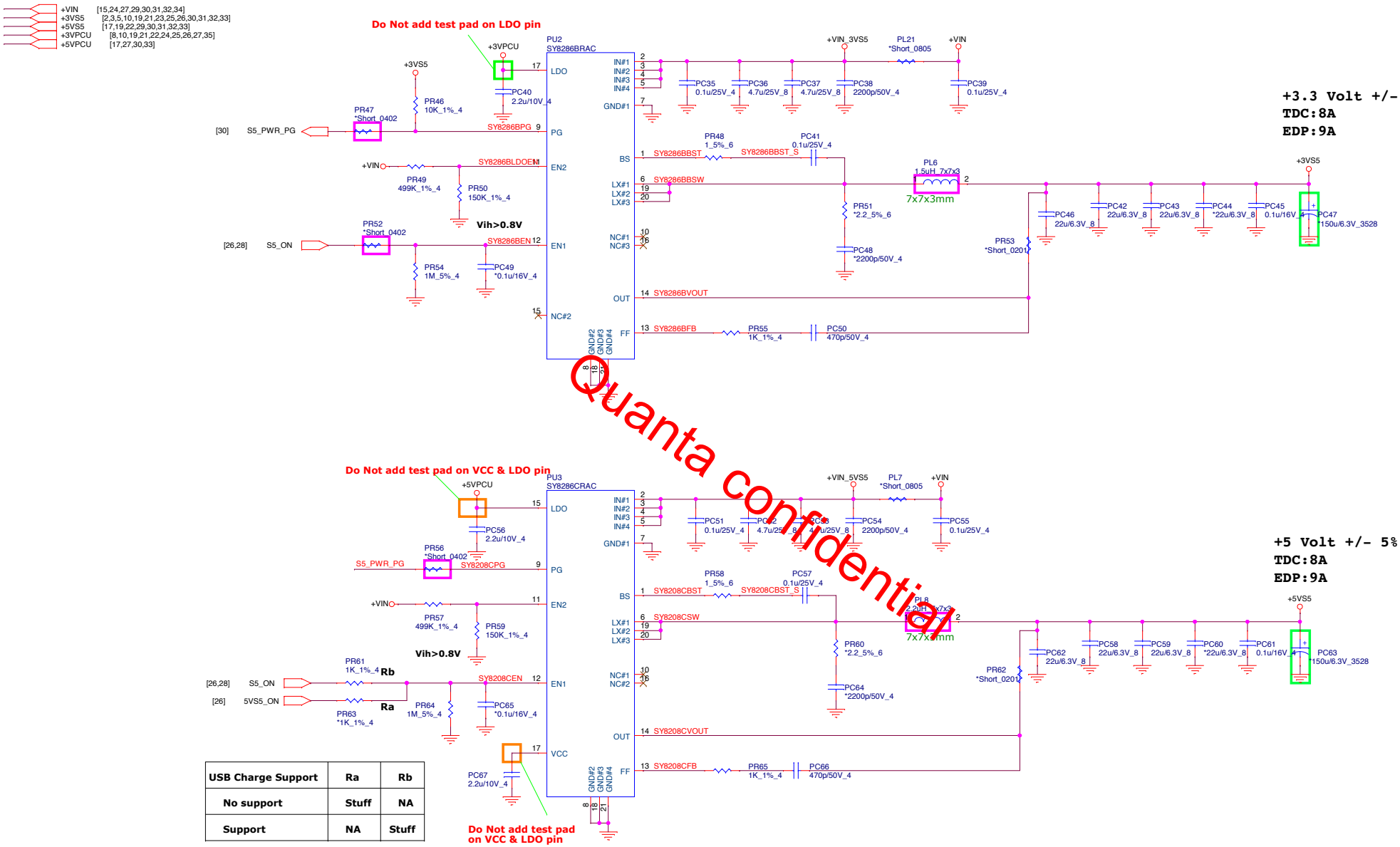


| USB Charge Support | Ra | Rb |
|---|---|---|
| No support | Stuff | NA |
| Support | NA | Stuff |

Quanta confidential

**PROJECT : G72D**

Quanta Computer Inc.

| Size | Document Number | Rev |
|---|---|---|
| Custom | 3/5VS5 (SY8208B/SY8208C) | 1A |

Date: Tuesday, January 24, 2017 Sheet 28 of 35

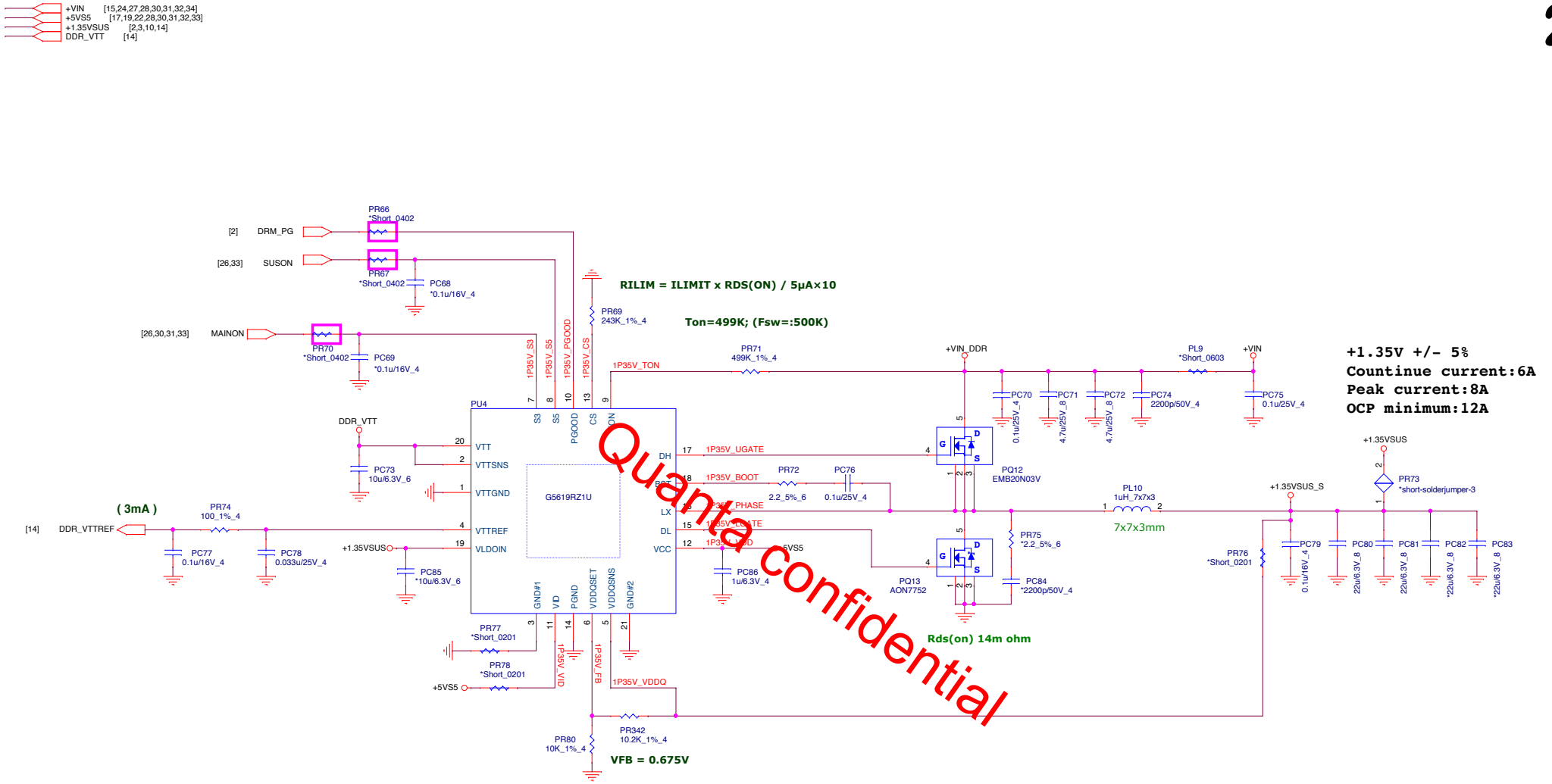


**PROJECT : G72D**

Quanta Computer Inc.

| Size | Document Number | Rev |
|---|---|---|
| Custom | DDR4 (G5619RZ1U) | 1A |

Date: Tuesday, January 24, 2017 Sheet 29 of 35

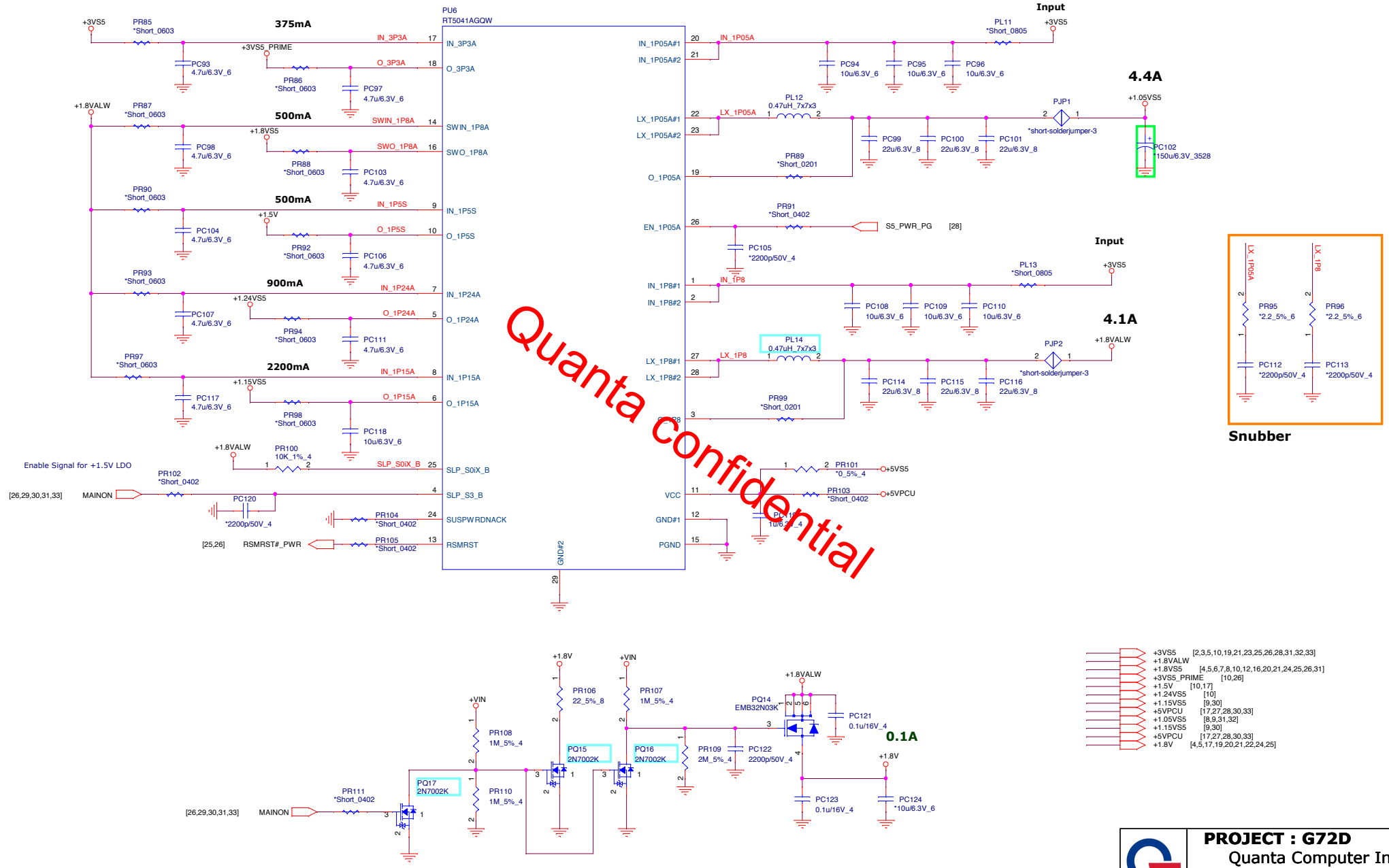


+3VS5 [2,3,5,10,19,21,23,25,26,28,31,32,33]
+1.8VALW
+1.8VS5 [4,5,6,7,8,10,12,16,20,21,24,25,26,31]
+3VS5_PRIME [10,26]
+1.5V [10,17]
+1.24VS5 [10]
+1.15VS5 [9,30]
+5VPCU [17,27,28,30,33]
+1.05VS5 [8,9,31,32]
+1.15VS5 [9,30]
+5VPCU [17,27,28,30,33]
+1.8V [4,5,17,19,20,21,22,24,25]

**PROJECT : G72D**
Quanta Computer Inc.

| Size | Document Number | Rev |
|---|---|---|
| Custom | 1.05VS5/1.8VS5/1.24VS5 | 1A |

Date: Tuesday, January 24, 2017 Sheet 30 of 35

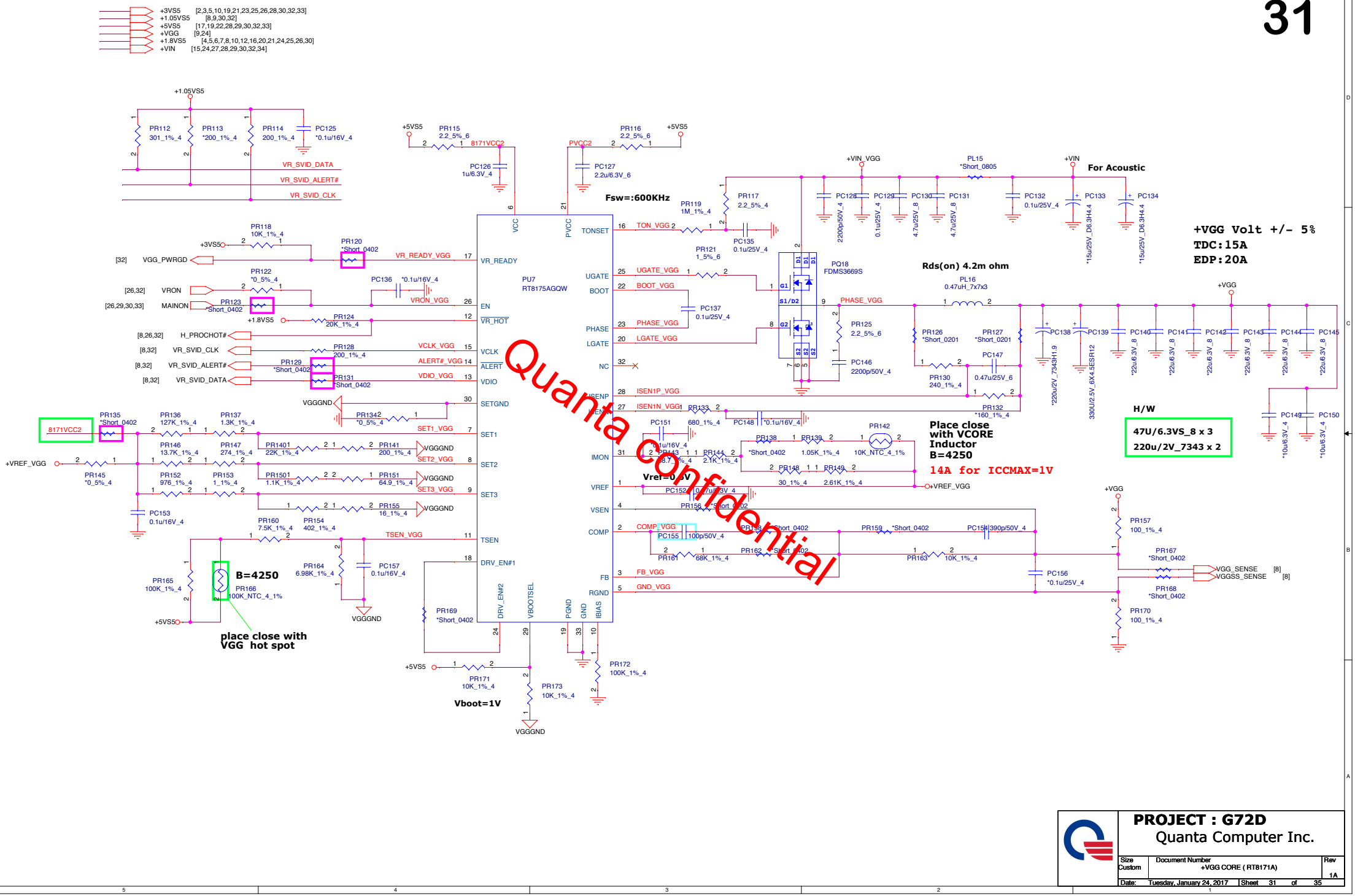
+3VS5 [2,3,5,10,19,21,23,25,26,28,30,32,33]
+1.05VS5 [8,9,30,32]
+5VS5 [17,19,22,28,29,30,32,33]
+VGG [9,24]
+1.8VS5 [4,5,6,7,8,10,12,16,20,21,24,25,26,30]
+VIN [15,24,27,28,29,30,32,34]
PU7
RT8175AGQW
Fsw=:600KHz
PQ18
FDMS3669S
Rds(on) 4.2m ohm
For Acoustic
+VGG Volt +/- 5%
TDC:15A
EDP:20A
H/W
47U/6.3VS_8 x 3
220u/2V_7343 x 2
Place close with VCORE Inductor B=4250
14A for ICCMAX=1V
B=4250
place close with VGG hot spot
Vref=0.5V
Vboot=1V
Quanta Confidential
VR_SVID_DATA
VR_SVID_ALERT#
VR_SVID_CLK
VR_READY_VGG
VRON_VGG
VCLK_VGG
ALERT#_VGG
VDIO_VGG
SET1_VGG
SET2_VGG
SET3_VGG
TSEN_VGG
TON_VGG
UGATE_VGG
BOOT_VGG
PHASE_VGG
LGATE_VGG
ISEN1P_VGG
ISEN1N_VGG
FB_VGG
GND_VGG
COMP_VGG
VGG_SENSE
VGGSS_SENSE
PROJECT : G72D
Quanta Computer Inc.
Size Custom
Document Number +VGG CORE ( RT8171A)
Rev 1A
Date: Tuesday, January 24, 2017
Sheet 31 of 35

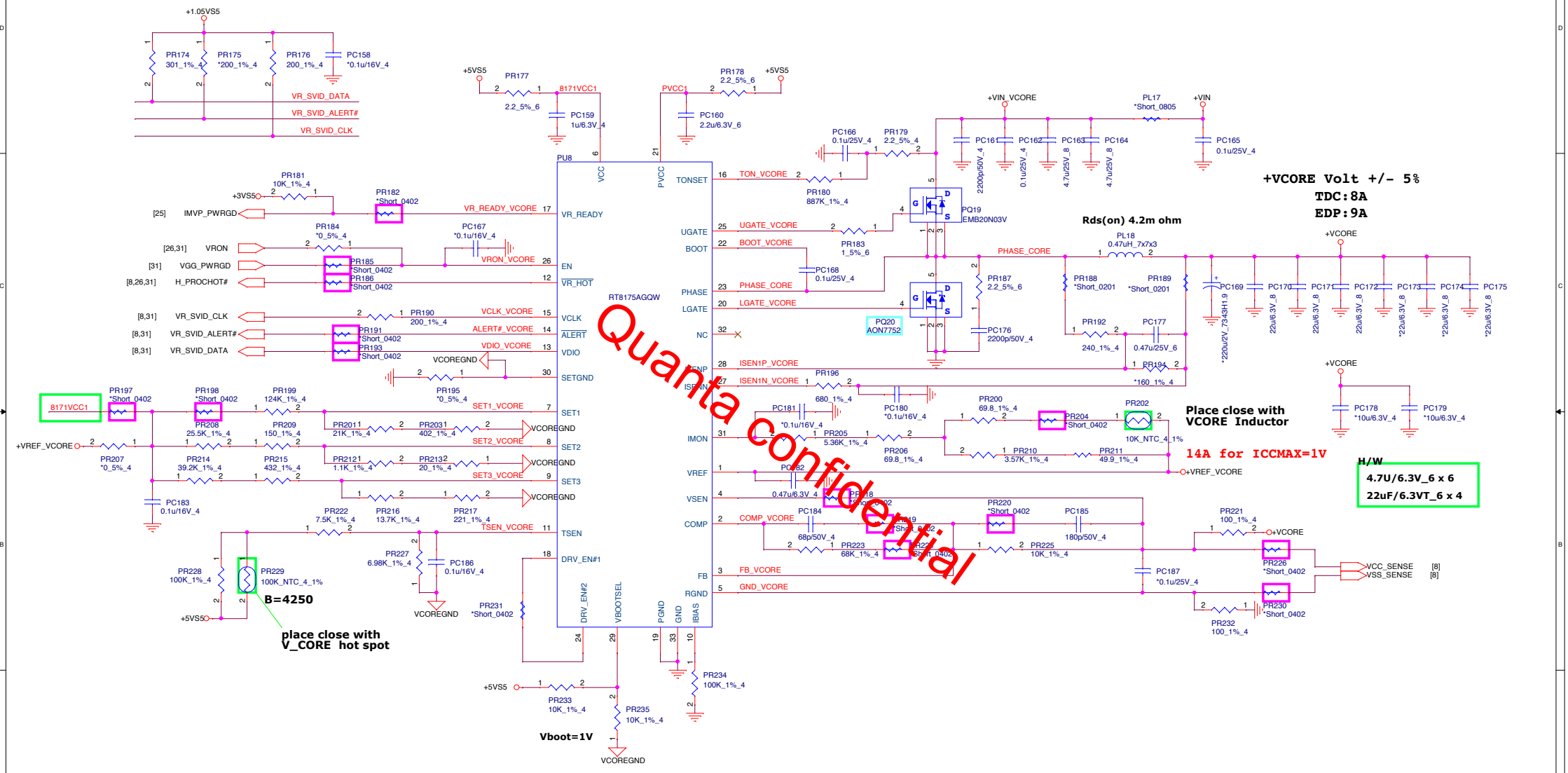


**PROJECT : G72D**

Quanta Computer Inc.

| Size | Document Number | Rev |
|---|---|---|
| Custom | +VCC CORE ( RT8171A) | 1A |

Date: Tuesday, January 24, 2017 Sheet 32 of 35

+3V [4,14,15,16,17,18,19,20,21,22,23,24,25,26]
+5V [15,16,17,20,23,24]
+VIN [15,24,27,28,29,30,31,32,34]
+3VS5 [2,3,5,10,19,21,23,25,26,28,30,31,32]
+5VS5 [17,19,22,28,29,30,31,32]
+3VSUS [24]
+5VPCU [17,27,28,30]
+3VLANVCC [18]

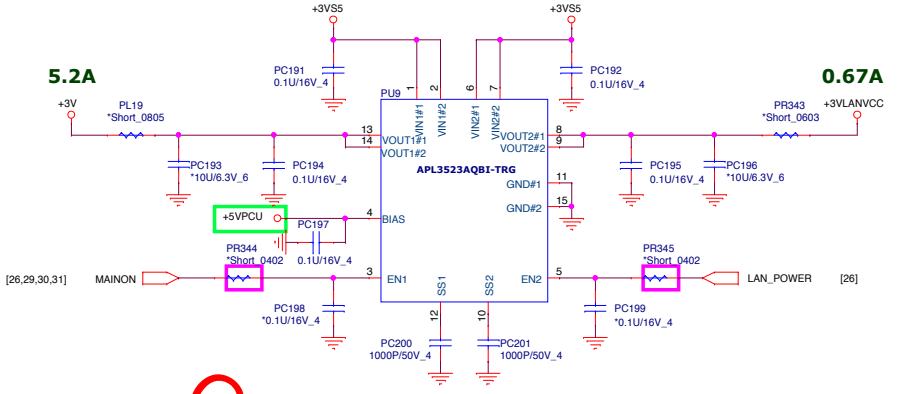


Quanta confidential

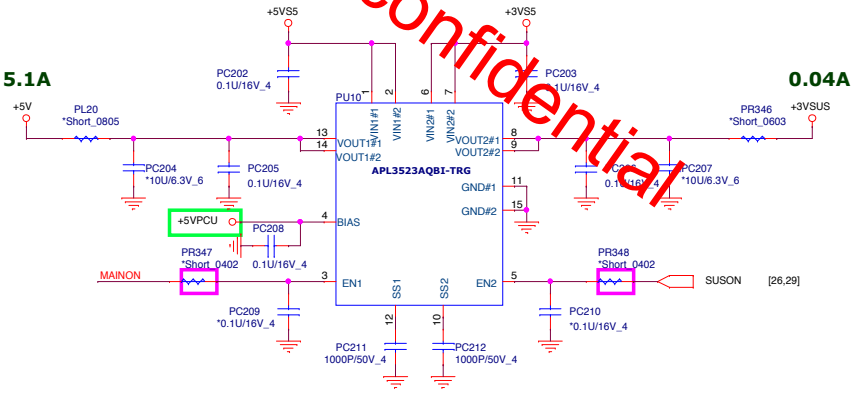


**PROJECT : G72D**
Quanta Computer Inc.

| Size | Document Number | Rev |
|---|---|---|
| Custom | Load switch IC (APL3523A) | 1A |

Date: Tuesday, January 24, 2017 | Sheet 33 of 35

**EMI request for ISN**

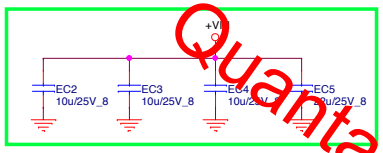


**EMI request for ISN**

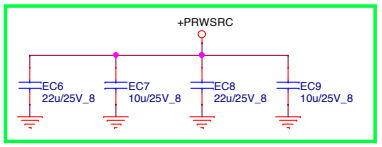


Quanta confidential

| | | |
|---|---|---|
| **PROJECT : G72D** Quanta Computer Inc. | | |
| Size Custom | Document Number **EMI solution** | Rev 1A |
| DateTuesday, January 24, 2017 | Sheet 34 of 35 | |

+3VPCU [8,10,19,21,22,24,25,26,27,28]
+BAT_RTC [8,22]

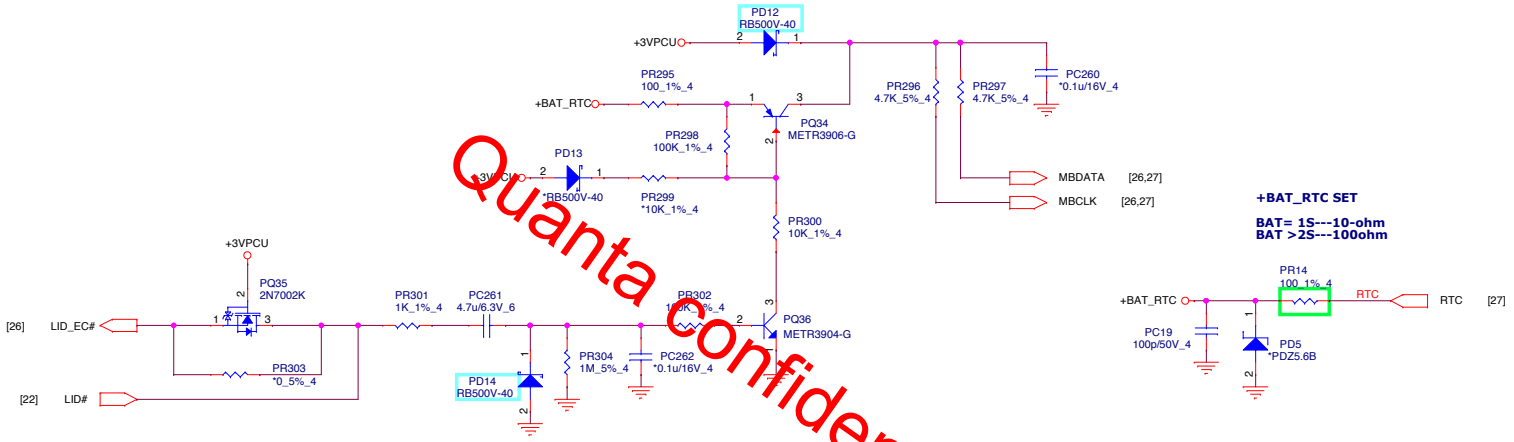


Quanta Confidential

**PROJECT : G72D**
Quanta Computer Inc.

| Size | Document Number | Rev |
|---|---|---|
| Custom | LID SW for storage mode | 1A |

DateTuesday, January 24, 2017 Sheet 35 of 35